CITY COUNCIL AGENDA ITEM COVER MEMO

Agenda Item Number: _____

Meeting Type: Regular

Meeting Date: Aug 14, 2014

Action Requested By: Engineering

Agenda Type: Resolution

Subject Matter:

Agreement with Wiregrass Construction Company, Inc.

Exact Wording for the Agenda:

Resolution authorizing the Mayor to enter into an agreement with the low bidder, Wiregrass Construction Company, Inc., for Downtown Gateway (aka Harvard Road Extension)-REBID, Base Bid, Project No. 65-11-RD03

Note: If amendment, Please state title and number of the original

Item to be considered for: Action

Unanimous Consent Required: No

Briefly state why the action is required; why it is recommended; what council action will provide, allow and accomplish and; any other information that might be helpful.

The Base Bid of the Downtown Gateway Project (Harvard Avenue) from Governors Drive to Williams Avenue. The scope includes the clearing and demolition of the existing infrastructure, roadway embankment, roadway storm drainage and associated utilities for a total contract amount of $2,073,750.63. Account No. 23-6500-0813-8112

Associated Cost: $2,073,750.63

Budgeted Item: _____

MAYOR RECOMMENDS OR CONCURS: _____

IT
PK

Department Head: Kathy Martin

Date: 8/11/14

ROUTING SLIP
CONTRACTS AND AGREEMENTS

Originating Department: **Engineering** Council Meeting Date: **8/14/2014**

Department Contact: **Lynn Majors** Phone # **256-427-5201**

Contract or Agreement: **Construction Contract**

Document Name: **Wiregrass-Downtown Gateway REBID Project 65-11-RD03**

City Obligation Amount: **$2,073,750.63**

Total Project Budget: **$2,073,750.63**

Uncommitted Account Balance: **0**

Account Number: **23-6500-0813-8112**

Procurement Agreements

Title 39	Competitive

Grant-Funded Agreements

Not Applicable	Grant Name:

Department	Signature	Date
1) Originating	Kathy Martin	8/11/14
2) Legal	[illegible]	8-11-14
3) Finance	[illegible]	8/11/14
4) Originating		
5) Copy Distribution		
a. Mayor's office (1 copies)		
b. Clerk-Treasurer (Original & 2 copies)		

RESOLUTION NO. 14-_____

BE IT RESOLVED by the City Council of the City of Huntsville, Alabama, that the Mayor be, and is hereby authorized, to enter into a contract with the low bidder, Wiregrass Construction Company, Inc., in the amount of TWO MILLION SEVENTY-THREE THOUSAND SEVEN HUNDRED FIFTY AND .63/100 DOLLARS ($2,073,750.63) for Downtown Gateway (aka Harvard Road Extension)-REBID, Base Bid, Project No. 65-11-RD03, in Huntsville, Alabama, on behalf of the City of Huntsville, a municipal corporation in the State of Alabama, which said agreement is substantially in words and figures similar to that document attached hereto and identified as "Contract between City of Huntsville and Wiregrass Construction Company, Inc. for Downtown Gateway (aka Harvard Road Extension)-REBID, Base Bid, Project No. 65-11-RD03" consisting of a total of one (1) page plus one hundred thirty-five (135) additional pages consisting of Attachments A1-J, Supplement to General Requirements for Construction of Public Improvements and all Addenda, "Certification of Compliance with Title 39, Code of Alabama", and "E-Verify Statement", and the date of August 14, 2014, appearing on the margin of the first page, together with the signature of the President or President Pro Tem of the City Council, and an executed copy of said document being permanently kept on file in the Office of the City Clerk of the City of Huntsville, Alabama.

ADOPTED this the 14th day of August, 2014.

_____
President of the City Council of the City of Huntsville, Alabama

APPROVED this the 14th day of August, 2014.

_____
Mayor of the City of Huntsville, Alabama

CONTRACT BETWEEN CITY OF HUNTSVILLE
AND
WIREGRASS CONSTRUCTION COMPANY, INC.
FOR
DOWNTOWN GATEWAY (AKA HARVARD ROAD EXTENSION)-REBID, BASE BID
PROJECT NO. 65-11-RD03

STATE OF ALABAMA}
MADISON COUNTY}

THIS CONTRACT, made and entered into this 14th day of August, 2014, between the CITY OF HUNTSVILLE, ALABAMA, a Municipal Corporation, sometimes referred to herein as City, and WIREGRASS CONSTRUCTION COMPANY, INC., sometimes referred to herein as Contractor.

-WITNESSETH-

WHEREAS, the City desires to install, construct or make certain improvements known as Downtown Gateway (aka Harvard Road Extension)-REBID, Base Bid, Project No. 65-11-RD03, in the City of Huntsville, Madison County, Alabama, all in accordance with details, specifications, surveys and general requirements prepared by the City of Huntsville Urban Development Department - Engineering Division, which are on file in the Office of the City Engineer of the City of Huntsville, Alabama, all of which details, specifications, surveys and general requirements are made a part of this contract, and

NOW, THEREFORE, it is agreed that the Contractor promises and agrees to make such improvements for the party of the first part for the considerations hereinafter set out. The Contractor promises and agrees to furnish all necessary labor, materials and equipment for the doing of the same, all to be done in accordance with such details, plans, specifications and general requirements hereto attached and made a part of this contract.

FOR THE PERFORMANCE of such work, the City agrees to pay the Contractor as follows per Attachment "A1".

BY:

_____
Tommy Battle, Mayor

_____
Wiregrass Construction Company, Inc.

_____
Charles E. Hagood
City Clerk Treasurer

ATTEST: _____

_____
Mark Russell
City Council President

DATE: August 14, 2014

DOWNTOWN GATEWAY (HARVARD ROAD EXTENSION)-REBID
PROJECT NO. 65-11-RD03

CITY OF HUNTSVILLE, ALABAMA

TABLE OF CONTENTS

Bid Quantities	ATTACHMENT A 1
Bid Proposal	ATTACHMENT B
Subcontractor's Listing	ATTACHMENT C
References of Similar Projects	ATTACHMENT D
Notice to Contractors	ATTACHMENT E
Sample Copy of Invoice	ATTACHMENT F
W9-Taxpayer Form	ATTACHMENT G
City of Huntsville Report of Ownership Form	ATTACHMENT H
Landscaping Specifications	ATTACHMENT I
Irrigation Specifications	ATTACHMENT J

SUPPLEMENT TO GENERAL REQUIREMENTS

SECTION	SECTION NO.
General	1
Proposal Preparation	2
Quantities	3
Change Orders	4
Maintain Office	5
Subcontractors	6
Bid Bond	7
N/A	8
Liability Insurance	9
Licenses and Classifications	10
Permits	11
Payment	12
N/A	13
Examination of Plans, Specifications, Special Provisions, and Site Work	14
Inclusions to Contract	15
Commencement of Work	16
Contract Time	17
Liquidated Damages	18
Storage of Materials	19
Traffic Flow	20
Termination for Convenience	21
Termination for Cause	22
Unbalanced Bids	23
Additional Insurance Requirements	24
Domestic Preferences	25
Time is of the Essence	26
No Damages for Delays	27
Contractor Responsible for Locating Utilities Prior to Construction Initiation	28
Correction to City of Huntsville's Standard Specifications for the Construction of Public Improvements, Contract Projects, 1991-Recovery Time	29
Warranties	30
Coordination with other Contractors	31
W-9 Taypayer Form	32
Final Payment	33
Project Completion Date	34
Record Drawings	35

TABLE OF CONTENTS
PAGE TW0

Lien Waivers	36
Lowest Responsible Bidder	37
Non-Resident Bidders	38
Correction to Section 80.08C of The City of Huntsville "Standard Specifications for Construction of Public Improvements"	39
Correction to section 80 – Prosecution & Progress 80.01 subletting and contract. (a) limitations	40
Correction to Section 80 – Prosecution and Progress 80.03 Progress Schedule of Oper.	41
Correction to Section 80 – Prosecution and Progress 80.09(b)	42
Correction to Section 105 – Excavation and Embankment	43
Correction to Section 847 – Pipe Culvert Joint Sealers	44
NPDES Construction Requirements	45
DELETION of Section 50.01 – Authority of Engineer of Record	46
Shop Drawings	47
E-Verify Statement	48
City of Huntsville Engineering Department Construction Requirements	49
Survivability of Contract Provisions	50
Surety Bonds	51
Governing Law	52
Alabama Immigration Act	53
Successors and Assigns	54
Written Notice	55
Rights and Remedies	56
Entire Agreement	57

ATTACHMENT "A1" **8/5/2014**

Downtown Gateway (aka Harvard Road Extension) - REBID
Project No. 65-11-RD03

UNIT BID SHEET

ITEM NO.	DESCRIPTION	QTY	UNIT	BID PRICE	BID AMOUNT
1	Mobilization	1	LS	$447,311.36	$ 447,311.36
2	Clearing and Grubbing (Contains all demolition and Removal Items, Approx. 21 acres)	1	LS	$191,340.51	$ 191,340.51
3	Unclassified Excavation (Includes stripping, stockpiling and placing 4" of topsoil)	9,500	CYD	$ 11.90	$ 113,050.00
4	Unclassified Excavation (Special Undercutting)	6,400	CYD	$ 8.61	$ 55,104.00
5	Topsoil (Furnish and Install)	750	CYD	$ 18.18	$ 13,635.00
6	Borrow Excavation	28,000	CYD	$ 13.32	$ 372,960.00
7	Engineering Controls	1	LS	$217,499.92	$ 217,499.92
8	Mulching And Seeding	3	AC	$ 2,302.27	$ 6,906.81
9	Erosion Control Product, Type S2 (Blankets for Slopes)	2,200	SY	$ 1.59	$ 3,498.00
10	Silt Fence Install, Maintain & Remove	2,700	LF	$ 4.97	$ 13,419.00
11	Orange Safety Fence	3,000	LF	$ 4.27	$ 12,810.00
12	Temporary Construction Entrance, Utilizing Coarse Aggregate, ALDOT #2	5	EA	$ 1,736.83	$ 8,684.15
13	Inlet Protection (20" Wattles)	1,100	LF	$ 11.10	$ 12,210.00
14	Furnish and Install Temporary Traffic Control	1	LS	$122,659.33	$ 122,659.33

15	8" Corrugated HDPE Drain (Complete in Place to Include Excavation, Pipe, #78 Stone Backfill)	813	LF	$ 21.62	$ 17,577.06
16	15" Roadway Pipe (Class 3 R.C.)	164	LF	$ 34.96	$ 5,733.44
17	18" Roadway Pipe (Class 3 R.C.)	1,233	LF	$ 41.84	$ 51,588.72
18	24" Roadway Pipe (Class 3 R.C.)	384	LF	$ 56.19	$ 21,576.96
19	30" Roadway Pipe (Class 3 R.C.)	512	LF	$ 73.52	$ 37,642.24
20	22" Span, 14" Rise Roadway Pipe (Class 3 R.C.)	232	LF	$ 57.46	$ 13,330.72
21	29" Span, 18" Rise Roadway Pipe (Class 3 R.C.)	571	LF	$ 81.50	$ 46,536.50
22	36" Span, 23" Rise Roadway Pipe (Class 3 R.C.)	41	LF	$ 100.85	$ 4,134.85
23	Junction Boxes, Type 1	17	EA	$ 1,751.96	$ 29,783.32
24	Junction Boxes, Type 1 (Special) (Large JB)	3	EA	$ 5,452.17	$ 16,356.51
25	Inlets, Type S3 (1 Wing)	4	EA	$ 2,871.86	$ 11,487.44
26	Inlets, Type S3 (2 Wing)	2	EA	$ 3,239.36	$ 6,478.72
27	Inlets, Type B (Surface Grates)	4	EA	$ 2,215.57	$ 8,862.28
28	Nyloplast 10" Perforated Catch Basin (Includes #78 stone underdrain & River Rock with Filter Blanket)	10	EA	$ 2,241.69	$ 22,416.90
29	Nyloplast 24" Perforated Catch Basin (Includes #78 stone underdrain & River Rock with Filter Blanket)	11	EA	$ 3,692.26	$ 40,614.86
30	Inlets, Type E (Modified) (C.O.H. Standard Curb Inlet)	4	EA	$ 2,362.62	$ 9,450.48
31	Inlets, Open Throat	6	EA	$ 1,885.76	$ 11,314.56

32	8 Inch Ductile Iron Sanitary Sewer Gravity Pipe (All Depths) Laid Complete in Place	966	LF	$ 57.27	$ 55,322.82
33	48 Inch Manhole	3	EA	$ 2,260.61	$ 6,781.83
34	Core and Connect to Existing Manhole	2	EA	$ 822.24	$ 1,644.48
35	TVI and Vacuum Testing	1	LS	$ 4,166.01	$ 4,166.01
36	5" PVC Conduit (Contractor to Provide Labor Concrete for Elbows and All Incidentals)	800	LF	$ 10.42	$ 8,336.00
37	6" PVC Conduit (Contractor to Provide Labor Concrete for Elbows and All Incidentals)	200	LF	$ 10.96	$ 2,192.00
38	Set New Sectionalizing Cabinet Base (Contractor to Provide Labor Stone and all Incidentals)	5	EA	$ 6,577.91	$ 32,889.55
39	Concrete for Utility Encasement (As Directed By the Engineer)	30	CYD	$ 191.86	$ 5,755.80
40	Fagan Creek Electrical Bore (5" Red Sch. 80 HDPE)	150	LF	$ 49.33	$ 7,399.50
41	SLOPE PAVING	10	CYD	$ 328.90	$ 3,289.00
	TOTAL Base Bid				$2,073,750.63

	Option No. 1: BRIDGE				
1-1	Mobilization to Include Engineering Controls	1	LS	$ 60,297.53	$ 60,297.53
				1,275,000.00	1,275,000.00
1-2	Bridge	1	LS	###########	###########
1-3	Handrail with New Orleans Finial Model No. 120 or Approved Equal (Areas outside the limits of the Bridge)	200	LF	$ 148.00	$ 29,600.00
1-4	Bridge Retaining Walls Per ALDOT Std Drawing RW 10-4 (Quantity based on Exposed Face) Includes Stone Backfill Weep Holes And All Incidentals	870	SF	$ 93.19	$ 81,075.30

1-5	Bridge End Slab ALDOT Special Drawing (BES-450-0)	350	SY	$ 104.15	$ 36,452.50
1-6	HP 12 x 53 Steel Piling Furnish and Driven	2,400	LF	$ 59.20	$ 142,080.00
1-7	Pile Points, Type A 12"	56	EA	$ 191.86	$ 10,744.16
1-8	Slope Paving	20	CYD	$ 411.12	$ 8,222.40
1-9	Bridge Traffic Striping, Class W, Type A (All Colors and Widths)	1	LS	$ 3,837.12	$ 3,837.12
	TOTAL Option No. 1				$1,647,309.01

	Option No. 2: HARVARD ROAD BASE PAVE AND SIGNAL				
2-1	Mobilization	1	LS	$ 84,500.00	$ 84,500.00
2-2	Topsoil (Furnish and Install)	500	CYD	$ 18.18	$ 9,090.00
2-3	Reset Fire Hydrant	6	EA	$ 1,973.37	$ 11,840.22
2-4	Valve Box Reset (Gas)	2	EA	$ 274.08	$ 548.16
2-5	Valve Box Reset (Water)	11	EA	$ 274.08	$ 3,014.88
2-6	Engineering Controls	1	LS	$ 45,000.00	$ 45,000.00
2-7	Tapered Curb Opening with 24" Diameter Pervious Concrete Apron (Stained Dark Brown Spec. Color)	100	EA	$ 472.31	$ 47,231.00
2-8	5" Thick, Crushed Aggregate Base Course, Type B, Plant Mixed	900	SY	$ 7.56	$ 6,804.00
2-9	10" Thick, Crushed Aggregate Base Course, Type B, Plant Mixed, 2-5" Lifts (Material placed outside of Paving Limits will not be measured for payment but will be Considered Incidental to Layer)	17,360	SY	$ 12.24	$ 212,486.40

2-10	Base Failure Repair Includes Pavement Removal and (2) 4" Thick Layers of 1" Max Aggregate Size Binder	150	SY	$ 47.93	$ 7,189.50
2-11	Bituminous Treatment A, Prime Coat, (0.10 gal/syd)	1,900	GAL	$ 5.67	$ 10,773.00
2-12	Tack Coat .07gal/syd	1,500	GAL	$ 6.48	$ 9,720.00
2-13	1" Thick, Superpave Bituminous Concrete Wearing Layer, 1/2" Max. Aggregate Size, ESAL Range C/D, (110 lb/syd)	50	TN	$ 127.46	$ 6,373.00
2-14	1.21" Thick, Superpave Bituminous Concrete Wearing Layer, 1/2" Max. Aggregate Size, ESAL Range C/D, (133 lb/syd)	100	TN	$ 91.80	$ 9,180.00
2-15	1.25" Thick, Superpave Bituminous Concrete Wearing Layer, 1/2" Max. Aggregate Size, ESAL Range C/D, (138 lb/syd)	1,400	TN	$ 88.22	$ 123,508.00
2-16	2" Thick, Superpave Bituminous Concrete Wearing Layer, 1/2" Max. Aggregate Size, ESAL Range C/D, (220 lb/syd)	125	TN	$ 122.17	$ 15,271.25
2-17	2.27" Thick, Superpave Bituminous Concrete Upper Binder Layer, 1" Max. Aggregate Size, ESAL Range C/D, (250 lb/syd)	175	TN	$ 89.75	$ 15,706.25
2-18	3.0" Thick, Superpave Bituminous Concrete Upper Binder Layer, 1" Max. Aggregate Size, ESAL Range C/D, (330 lb/syd)	2,700	TN	$ 65.09	$ 175,743.00
2-19	Plain Cement Concrete Pavement (Modified), 5" Thick	1,267	SY	$ 70.00	$ 88,690.00
2-20	Concrete Sidewalk, 4" Thick (Includes 4" Thick Stone Leveling Layer)	6,554	SY	$ 40.51	$ 265,502.54
2-21	Concrete Gutter (Valley)	62	LF	$ 35.08	$ 2,174.96
2-22	Concrete Curb, Type N (6" x 16")	8,300	LF	$ 9.33	$ 77,439.00
2-23	Combination Curb & Gutter, Type C (Modified) (18" Gutter)	1,000	LF	$ 12.47	$ 12,470.00

2-24	6" Concrete Curb, Transition From Roadway to Bridge (Includes Dowels and All	80	LF	$ 16.44	$ 1,315.20
2-25	Handicap Ramps with ADA Detectable Warning Pavers (All Widths)	25	EA	$ 2,165.23	$ 54,130.75
2-26	36" DIA. Traffic Signal Pole Foundation ALDOT Drawing Number T.S.D. 730-4	13	EA	$ 2,740.80	$ 35,630.40
2-27	24" x 30" Quazite Traffic Signal Junction Box (City Traffic Standard)	17	EA	$ 767.42	$ 13,046.14
2-28	Parking Meter Pom Model APM-N Complete in Place	20	EA	$ 213.78	$ 4,275.60
2-29	Dotted, Class 2, Type A Traffic Stripe (4" Wide)	1,100	LF	$ 2.19	$ 2,409.00
2-30	Broken White, Class 2, Type A Traffic Stripe (4" Wide)	4,000	LF	$ 0.66	$ 2,640.00
2-31	Solid White, Class 2, Type A Traffic Stripe (8" Wide)	900	LF	$ 3.56	$ 3,204.00
2-32	Solid White, Class 2, Type A Traffic Stripe (12" Wide)	1,900	LF	$ 5.48	$ 10,412.00
2-33	Solid White, Class 2, Type A Traffic Stripe (4" Wide)	900	LF	$ 0.99	$ 891.00
2-34	Broken Yellow, Class 2, Type A Traffic Stripe (4" Wide)	250	LF	$ 0.66	$ 165.00
2-35	Class 1, Type B, Paint Striping (Parking Lot Areas)	1,000	LF	$ 0.93	$ 930.00
2-36	Solid Yellow, Class 2, Type A Traffic Stripe (4" Wide)	1,750	LF	$ 0.66	$ 1,155.00
2-37	Traffic Control Markings and Legends, Class 2, Type A	2,700	SF	$ 6.58	$ 17,766.00
2-38	Solid White, Class 1, Type A Traffic Stripe (4" Wide) (For Cycle Track Markings)	5,800	LF	$ 0.93	$ 5,394.00

2-39	Temporary Striping (All Colors) (4" Wide)	1,000	LF	$ 0.55	$ 550.00
2-40	Temporary Marking	100	SF	$ 2.19	$ 219.00
2-41	Pavement Markers, Class A, Type 2-D	60	SF	$ 5.48	$ 328.80
2-42	Pavement Markers, Class A, Type 2-C	150	EA	$ 5.48	$ 822.00
2-43	Precast Concrete Parking Bumpers	7	EA	$ 82.22	$ 575.54
2-44	Class 2, Aluminum Flat Sign Panels 0.04" Thickness (Type III Background)	200	SF	$ 53.81	$ 10,762.00
2-45	Furnish and Install Temporary Traffic Control	1	LS	$ 38,489.46	$ 38,489.46
2-46	Solid Sodding (Bermuda)	8,000	SY	$ 4.11	$ 32,880.00
2-47	6" Class 200 PVC Irrigation Sleeve	1,000	LF	$ 13.16	$ 13,160.00
2-48	4" Class 200 PVC Irrigation Sleeve	750	LF	$ 10.96	$ 8,220.00
	TOTAL Option No. 2				$1,499,626.05

	Option No. 3: STREETLIGHTS				
3-1	Mobilization	1	LS	$ 1,644.48	$ 1,644.48
3-2	Enhanced Washington Postlite Light Pole Assembly with Breakaway Base, 400 Watt (Or City Approved Equal) Complete in Place to Include Concrete Foundation, Pole, Fixture, Grounding, Security Lug and All Incidentals	13	EA	$ 10,415.03	$ 135,395.39
3-3	Granville Light Pole Assembly, 150 Watt (Or City Approved Equal) Complete in Place to Include Concrete Foundation, Pole, Fixture, Grounding Security Lug and All Incidentals	55	EA	$ 4,494.91	$ 247,220.05
3-4	#2 Triplex 600V UG Cable Furnish and Install	8,000	LF	$ 2.47	$ 19,760.00
3-5	Quazite Box 12" x 12"	85	EA	$ 328.90	$ 27,956.50
3-6	2", Non-Metallic Conduit to Include Fittings and All Incidentals	10,000	LF	$ 8.77	$ 87,700.00
	TOTAL Option No. 3				$519,676.42

	Option No. 4: STREETSCAPE				
4-1	Mobilization	1	LS	$ 1,000.00	$ 1,000.00
4-2	River Rock (Median Gardens to include geotextile filter blanket)	20	TN	$ 219.26	$ 4,385.20
4-3	Structural Soil (See Specifications for Details)	320	CYD	$ 241.19	$ 77,180.80
4-4	Furnish & Install Trash Receptacles	18	EA	$ 931.87	$ 16,773.66
4-5	Furnish & Install Park Benches	19	EA	$ 2,137.82	$ 40,618.58
4-6	Furnish & Install Bike Rack	16	EA	$ 548.16	$ 8,770.56
4-7	Furnish & Install 60" Square Tree Grates	40	EA	$ 2,850.43	$ 114,017.20
	TOTAL Option No. 4				$262,746.00

Option No. 5: LANDSCAPING AND IRRIGATION

5-1	Mobilization	1	LS	$ 14,252.14	$ 14,252.14
5-2	Shrubs, Ophiopogon Japonicus (Mondo Grass), 2" Pot, 36" Height	335	EA	$ 3.29	$ 1,102.15
5-3	Trees, Acer Rubrum "October Glory" (October Glory), 3" Cal., 12'-15' Height	17	EA	$ 289.43	$ 4,920.31
5-4	Trees, Querus Lyrata (Overcup Oak), 4" Cal., 12-15' Height	18	EA	$ 986.69	$ 17,760.42
5-5	Trees, Querus Alba (White Oak), 4" Cal., 12-15' Height	26	EA	$ 342.05	$ 8,893.30
5-6	Trees, Tilia Cordata (Littleleaf Linden) (Greenspire), 3" Cal., 12-15' Height	32	EA	$ 315.74	$ 10,103.68
5-7	Trees, Ulmus Americana "Princeton" (Princeton Elm), 4" Cal., 12-15' Height	55	EA	$ 496.63	$ 27,314.65
5-8	Irrigation System	1	LS	$163,570.76	$ 163,570.76
5-9	Shrubs, Prunus Laurocerasus (Luykens Laurel), 5 Gal, 21-36" Height	75	EA	$ 78.93	$ 5,919.75
5-10	Shrubs, Thuja Occidentalis "Fire Chief" (Globe Arborvitae), 3 Gal, 18-24" Ht	344	EA	$ 33.17	$ 11,410.48
5-11	Shrubs, Juniperus Parsoni (Parsons Juniper), 1 Gal	30	EA	$ 8.55	$ 256.50
5-12	Trees, Quercus Lyrata "Highbeam" (Highbeam Overcup Oak), 4" Cal., 12-15' Height	2	EA	$ 986.69	$ 1,973.38
5-13	Shrubs, Hypericum Patulum, 2" Pot	82	EA	$ 11.84	$ 970.88
5-14	Shrubs, Buxus Microphylla (Littleleaf Boxwood), 5 Gal	55	EA	$ 59.18	$ 3,254.90

5-15	Shrubs, Ilex x meserveae "Blue Prince", 7 Gal	75	EA	$ 59.20	$ 4,440.00
5-16	Seasonal Annuals	1,293	EA	$ 3.29	$ 4,253.97
	TOTAL Option No. 5				$280,397.27

	Option No. 6: Additional Cost to Upgrade Irrigation to Baseline Station including all Incidentals				
6-1	Mobilization	1	LS	$ 100.00	$ 100.00
6-2	Additional Cost to Upgrade Irrigation Controllers (3) to Baseline Station 3200 (Including All Incidentals)	1	LS	$ 16,444.78	$ 16,444.78
	TOTAL Option No. 6				$16,544.78

	Option No. 7: Demo and Replace St. Clair Ave Pavement (Harvard Road to Gallatin St)				
7-1	Mobilization	1	LS	$ 32,382.73	$ 32,382.73
7-2	Engineering Controls	1	LS	$ 3,496.59	$ 3,496.59
7-3	Unclassified Excavation (Including Pavement Removal and Disposal)	1,500	CY	$ 12.49	$ 18,735.00
7-4	Roadbed Processing To Include Subgrade Preparation and Blue Topping	10	STA	$ 564.83	$ 5,648.30
7-5	8" Thick, Crushed Aggregate Base Course, Type B, Plant Mixed, (Installed in 2-4" Lifts)	3,500	SY	$ 10.00	$ 35,000.00
7-6	Bituminous Treatment A, Prime Coat, (0.10 gal/syd)	350	GAL	$ 6.19	$ 2,166.50
7-7	Tack Coat (.07 gal/syd)	250	GAL	$ 7.09	$ 1,772.50
7-8	1" Thick, Superpave Bituminous Concrete Wearing Layer, 1/2" Max. Aggregate Size, ESAL Range C/D, (110 lb/syd)	250	TN	$ 111.94	$ 27,985.00
7-9	2" Thick, Superpave Bituminous Concrete Upper Binder Layer, 1" Max. Aggregate Size, ESAL Range C/D, (220 lb/syd)	450	TN	$ 72.27	$ 32,521.50

7-10	Broken Yellow, Class 2, Type A Traffic Stripe (4" Wide)	1,900	LF	$ 0.66	$ 1,254.00
7-11	Solid Yellow, Class 2, Type A Traffic Stripe (4" Wide)	1,900	LF	$ 0.66	$ 1,254.00
7-12	Temporary Striping (All Colors) (4" Wide)	1,900	LF	$ 0.55	$ 1,045.00
7-13	Temporary Marking	80	SF	$ 2.19	$ 175.20
7-14	Traffic Control Markings and Legends, Class 2, Type A	325	SF	$ 6.58	$ 2,138.50
7-15	Furnish and Install Temporary Traffic Control	1	LS	$ 13,179.49	$ 13,179.49
7-16	Replace Existing Concrete Sidewalk, 4" Thick (Includes 4" Stone Leveling Layer)	50	SY	$ 39.47	$ 1,973.50
7-17	Replace Existing Combination Curb and Gutter, Match Existing	150	LF	$ 13.02	$ 1,953.00
	TOTAL Option No. 7				$182,680.81

	Option No. 8: St. Clair Stormwater Improvements				
8-1	Mobilization	1	LS	$ 46,530.53	$ 46,530.53
8-2	Clearing and Grubbing (contains all demo items, APPROX. 0.50 ACRES)	1	LS	$ 12,419.89	$ 12,419.89
8-3	Engineering Controls	1	LS	$ 3,496.59	$ 3,496.59
8-4	Unclassified Excavation	1500	CYD	$ 12.49	$ 18,735.00
8-5	Inlet Protection (Wattles)	12	EA	$ 47.28	$ 567.36
8-6	18" Roadway Pipe (Class 3 R.C.)	14	LF	$ 187.91	$ 2,630.74
8-7	36" Roadway Pipe (Class 3 R.C.)	448	LF	$ 95.63	$ 42,842.24
8-8	58.5" Span, 36" Rise Roadway Pipe (Class 3 R.C.)	634	LF	$ 207.63	$ 131,637.42

8-9	Junction Boxes, Type 1 (Special) (Large JB)	4	EA	$ 9,209.08	$ 36,836.32
8-10	Manhole Covers Reset (Storm)	1	EA	$ 684.14	$ 684.14
8-11	10" Thick, Crushed Aggregate Base Course, Type B, Plant Mixed, (Installed in 2-5" Lifts)	1,467	SY	$ 13.75	$ 20,171.25
8-12	Bituminous Treatment A, Prime Coat, (0.10 gal/syd)	150	GAL	$ 6.06	$ 909.00
8-13	Tack Coat (.07 gal/syd)	550	GAL	$ 7.80	$ 4,290.00
8-14	1.25" Thick, Superpave Bituminous Concrete Wearing Layer, 1/2" Max. Aggregate Size, ESAL Range C/D, (140 lb/syd)	500	TN	$ 101.47	$ 50,735.00
8-15	2.27" Thick, Superpave Bituminous Concrete Upper Binder Layer, 1" Max. Aggregate Size, ESAL Range C/D, (250 lb/syd)	200	TN	$ 120.05	$ 24,010.00
8-16	Broken Yellow, Class 2, Type A Traffic Stripe (4" Wide)	1,900	LF	$ 0.66	$ 1,254.00
8-17	Solid Yellow, Class 2, Type A Traffic Stripe (4" Wide)	1,900	LF	$ 0.66	$ 1,254.00
8-18	Traffic Control Markings, Class 2, Type A	150	SF	$ 6.58	$ 987.00
8-19	Furnishing and Installing Temporary Traffic Control	1	LS	$ 13,179.49	$ 13,179.49
8-20	Planing Existing Pavement (1.25' Depth)	7,000	SY	$ 2.78	$ 19,460.00
8-21	Replace Existing Concrete Sidewalk, 4" Thick (Includes 4" Stone Leveling Layer)	75	SY	$ 39.47	$ 2,960.25
8-22	Replace Existing Combination Curb and Gutter, Match Existing	100	LF	$ 13.02	$ 1,302.00
	TOTAL Option No. 8				$436,892.22

Option No. 9: Davis Ct. Cul-de-sac to Heart of Huntsville Roundabout & Hsv/Mad. Co. Public Library Parking Modifications

9-1	Mobilization	1	LS	$121,152.90	$ 121,152.90
9-2	Clearing and Grubbing (contains all demo items, APPROX. 2 ACRES)	1	LS	$ 48,676.20	$ 48,676.20
9-3	Unclassified Excavation (Includes stripping, stockpiling and placing topsoil)	1,000	CYD	$ 22.09	$ 22,090.00
9-4	Unclassified Excavation (Special Undercutting)	2,100	CYD	$ 9.73	$ 20,433.00
9-5	Borrow Excavation	3,000	CYD	$ 18.77	$ 56,310.00
9-6	Topsoil (Furnish and Install)	800	CYD	$ 17.88	$ 14,304.00
9-7	Engineering Controls	1	LS	$ 17,393.12	$ 17,393.12
9-8	Silt Fence	500	LF	$ 4.97	$ 2,485.00
9-9	Construction Entrance (Coarse Aggregate, ALDOT Number 1)	4	EA	$ 1,562.08	$ 6,248.32
9-10	Inlet Protection (Wattles)	600	EA	$ 6.90	$ 4,140.00
9-11	18" Roadway Pipe (Class 3 R.C.)	529	LF	$ 42.18	$ 22,313.22
9-12	Junction Boxes, Type 1	2	EA	$ 1,755.87	$ 3,511.74
9-13	Inlets, Type S3 (1 Wing)	1	EA	$ 2,876.04	$ 2,876.04
9-14	Inlets, Type S3 (2 Wing)	3	EA	$ 3,244.14	$ 9,732.42
9-15	Inlets, Type B (Surface Grates)	3	EA	$ 2,201.23	$ 6,603.69
9-16	Inlets, Type E (Modified) (C.O.H. Standard Curb Inlet)	4	EA	$ 2,163.06	$ 8,652.24
9-17	Manhole Covers Reset (Storm)	5	EA	$ 1,337.65	$ 6,688.25
9-18	10" Thick, Crushed Aggregate Base Course, Type B, Plant Mixed, (Installed in 2-5" Lifts) (Materials placed outside of Paving Limits will not be measured for payment)	3,350	SY	$ 15.27	$ 51,154.50

9-19	5" Thick, Crushed Aggregate Base Course, Type B, Plant Mixed	2,940	SY	$ 8.54	$ 25,107.60
9-20	Bituminous Treatment A, Prime Coat, (0.10 gal/syd)	630	GAL	$ 2.17	$ 1,367.10
9-21	Tack Coat (.07 gal/syd)	450	GAL	$ 9.56	$ 4,302.00
9-22	1" Thick, Superpave Bituminous Concrete Wearing Layer, 1/2" Max. Aggregate Size, ESAL Range C/D, (112 lb/syd)	200	TN	$ 113.00	$ 22,600.00
9-23	1.25" Thick, Superpave Bituminous Concrete Wearing Layer, 1/2" Max. Aggregate Size, ESAL Range C/D, (140 lb/syd)	300	TN	$ 113.00	$ 33,900.00
9-24	2.27" Thick, Superpave Bituminous Concrete Upper Binder Layer, 1" Max. Aggregate Size, ESAL Range C/D, (250 lb/syd)	450	TN	$ 71.85	$ 32,332.50
9-25	2" Thick, Superpave Bituminous Concrete Upper Binder Layer, 1" Max. Aggregate Size, ESAL Range C/D, (220 lb/syd)	350	TN	$ 77.31	$ 27,058.50
9-26	Plain Cement Concrete Pavement (Modified), 6" Thick	71	SY	$ 74.55	$ 5,293.05
9-27	Concrete Sidewalk, 4" Thick (Includes 4" Thick Stone Leveling Layer)	1,100	SY	$ 40.51	$ 44,561.00
9-28	Concrete Gutter (Req'd @ Landings)	160	LF	$ 39.47	$ 6,315.20
9-29	Concrete Gutter (Valley)	125	LF	$ 39.47	$ 4,933.75
9-30	Concrete Curb, Type D (6" x 16" Stand-up curb)	150	LF	$ 10.32	$ 1,548.00
9-31	Combination Curb & Gutter, Type C (Modified) (18" Gutter)	3,300	LF	$ 12.21	$ 40,293.00
9-32	Handicap Ramps with ADA Detectable Warning Pavers	18	EA	$ 2,165.23	$ 38,974.14
9-33	Manhole Covers Reset (Sanitary)	5	EA	$ 1,096.32	$ 5,481.60

9-34	Sanitary Sewer TVI & Pressure Testing	1	LS	$ 4,500.39	$ 4,500.39
9-35	Set New Sectionalizing Cabinet Base (Contractor to Provide Labor Stone and all Incidentals)	3	EA	$ 6,577.91	$ 19,733.73
9-36	5" PVC Conduit (Contractor to Provide Labor Concrete for Elbows and All Incidentals)	200	LF	$ 10.42	$ 2,084.00
9-37	Relocate Library Parking Lot Lights with New Foundations	3	EA	$ 2,192.64	$ 6,577.92
9-38	#2 Triplex 600V UG Cable Furnish and Install	2,000	LF	$ 2.47	$ 4,940.00
9-39	Quazite Box 12" x 12"	7	EA	$ 328.90	$ 2,302.30
9-40	2", Non-Metallic Conduit to Include Fittings and All Incidentals	300	LF	$ 8.77	$ 2,631.00
9-41	Furnish and Install 250W HPS Parking Lot Light Assembly (Suggs Center) to Include Fixture, Pole, Foundation and all Appurtenances	4	EA	$ 3,288.96	$ 13,155.84
9-42	#2 Triplex 600V UG Cable Furnish and Install	700	LF	$ 2.47	$ 1,729.00
9-43	Quazite Box 12" x 12"	6	EA	$ 328.90	$ 1,973.40
9-44	Solid White, Class 2, Type A Traffic Stripe (12" Wide Thermoplastic)	190	LF	$ 5.48	$ 1,041.20
9-45	Solid White, Class 2, Type A Traffic Stripe (24" Wide Thermoplastic)	250	LF	$ 10.96	$ 2,740.00
9-46	Traffic Control Markings, Class 2, Type A	50	SF	$ 6.58	$ 329.00
9-47	Class 1, Type B, Paint Striping (Parking Lot Areas)	1,100	LF	$ 0.93	$ 1,023.00
9-48	Class 2, Aluminum Flat Sign Panels 0.04" Thickness (Type III Background)	50	SF	$ 53.81	$ 2,690.50
9-49	Furnish and Install Temporary Traffic Control	1	LS	$ 16,503.94	$ 16,503.94

9-50	Roundabout Traffic Island complete-in-place to include curbs, handicap ramps, sidewalk, stamped concrete to match existing islands and all incidentals	1	LS	$ 24,667.17	$ 24,667.17
	TOTAL Option No. 9				$827,454.47

Option No. 10: Mill and Overlay St. Clair Pavement (Harvard Road to Gallatin Street)

10-1	Mobilization	1	LS	$ 6,649.87	$ 6,649.87
10-2	Planing Existing Pavement (1.50" Depth)	3,500	SY	$ 2.81	$ 9,835.00
10-3	Tack Coat (0.07 gal/syd)	250	GAL	$ 7.09	$ 1,772.50
10-4	1.50" Thick, Superpave Bituminous Concrete Wearing Layer, 1/2" Max. Aggregate Size, ESAL Range C/D, (165 lb/syd)	350	TN	$ 95.23	$ 33,330.50
10-5	Broken Yellow, Class 2, Type A Traffic Stripe (4" Wide)	1,900	LF	$ 0.66	$ 1,254.00
10-6	Solid Yellow, Class 2, Type A Traffic Stripe (4" Wide)	1,900	LF	$ 0.66	$ 1,254.00
10-7	Temporary Striping (All Colors) (4" Wide)	1,900	LF	$ 0.55	$ 1,045.00
10-8	Temporary Marking	80	SF	$ 2.19	$ 175.20
10-9	Traffic Control Markings and Legends, Class 2, Type A	325	SF	$ 6.58	$ 2,138.50
10-10	Furnish and Install Temporary Traffic Control	1	LS	$ 7,697.90	$ 7,697.90
10-11	Replace Existing Concrete Sidewalk, 4" Thick (Includes 4" Stone Leveling Layer)	50	SY	$ 40.56	$ 2,028.00
10-12	Replace Existing Combination Curb and Gutter, Match Existing	150	LF	$ 11.92	$ 1,788.00
	TOTAL Option No. 10				$68,968.47

Option No. 11: Milling & Repave for Davis Court Pelham Ave

11-1	Mobilization	1	LS	$ 12,844.47	$ 12,844.47
11-2	Tack Coat (0.07 gal/syd)	175	GAL	$ 7.09	$ 1,240.75
11-3	Planing Existing Pavement (1.25" Depth)	1,750	SY	$ 3.29	$ 5,757.50
11-4	1.25" Thick, Superpave Bituminous Concrete Wearing Layer, 1/2" Max. Aggregate Size, ESAL Range C/D, (140 lb/syd)	140	TN	$ 107.73	$ 15,082.20

11-5	Furnishing and Installing Temporary Traffic Control	1	LS	$ 4,408.94	$ 4,408.94
11-6	Replace Existing Concrete Sidewalk, 4" Thick (Includes 4" Stone Leveling Layer)	100	SY	$ 39.47	$ 3,947.00
11-7	Replace Existing Combination Curb and Gutter, Match Existing	200	LF	$ 11.92	$ 2,384.00
	TOTAL Option No. 11				$45,664.86

	Option No. 12: DUMPSTER ENCLOSURE				
12-1	Mobilization	1	LS	$ 2,740.80	$ 2,740.80
12-2	New Heavy Duty Concrete Slab for Garbage Truck	420	SF	$ 9.32	$ 3,914.40
12-3	New Concrete Dumpster Pad Ramp	60	SF	$ 16.44	$ 986.40
12-4	New Dumpster Gates	1	LS	$ 9,318.71	$ 9,318.71
12-5	New Screen Wall for Dumpster Enclosure	13	LF	$ 1,260.77	$ 16,390.01

	TOTAL Option No. 12				**$33,350.32**
	~~**Option No. 13**~~				
~~**13-1**~~	~~**Additional Cost to Upgrade Specified Planter Soil to CU Structural Soil**~~	~~**320**~~	~~**CYD**~~	~~**$ -**~~	~~**$ -**~~
	~~**TOTAL Option No. 13**~~				~~**$0.00**~~
	Option No. 14				
14-1	**Digital As-Builts (Alabama Registered Land Surveyor Stamped)**	**1**	**LS**	**$ 7,454.97**	**$ 7,454.97**
	TOTAL Option No. 14				**$7,454.97**

	Option No. 15				
15-1	Contractor retained Construction Trailer Type 2 with Climate Control to include installation, maintenance and removal. Trailer shall be furnished with sanitary sewer, water, electricity and weekly cleaning service. Contractor is responsible for all fees, permits and utilities for the project duration.	12	Month	$ 969.01	$ 11,628.12
	TOTAL Option No. 15				**$11,628.12**

ALL ITEMS SHALL BE CONSIDERED IN-PLACE. PRICES SHALL INCLUDE ALL LABOR, EQUIPMENT,MATERIALS, AND REMOVALS AS REQUIRED FOR CONSTRUCTION OF THE REQUIRED WORK.

COMPANY Wiregrass Construction Co, Inc
SIGNATURE [signature]
DATE 8/5/2014

ATTACHMENT "B"
PROPOSAL

TO: THE CITY OF HUNTSVILLE

Public Services Building
320 Fountain Circle
Huntsville, Alabama

PROPOSAL OF Wiregrass Construction Company, Inc.
(NAME)
3848 Highway 20, Trinity, Alabama 35673
(ADDRESS)

TO MAKE CERTAIN IMPROVEMENTS ENTITLED:

DOWNTOWN GATEWAY (HARVARD ROAD EXTENSION)-REBID
PROJECT NO. 65-11-RD03

FOR THE CITY OF HUNTSVILLE, ALABAMA.

GENTLEMEN:
The undersigned bidder has carefully examined the drawings or plans, bid documents, the specifications, the general requirements, the supplement to general requirements, the general terms and conditions, this proposal, the agreement, together with any addenda thereto, and agrees to furnish and deliver all the materials, and to do and perform all the work and labor required to be furnished and delivered, done and performed in and about the improvements as described above and in accordance with certain specifications prepared and approved by the OWNER (City of Huntsville, Alabama). It is MANDATORY that any and all addenda be acknowledged by the undersigned bidder, either on page 2 of the Proposal, Attachment "B" or on the outside of the envelope, otherwise, bid shall be rejected.

The undersigned bidder understands that when unit prices are called for, the quantities shown herein are approximate only and are subject to increase or decrease, and offers to do the work whether the quantities are increased, or decreased, at the unit prices stated in the following schedule. The undersigned bidder also understands that when lump sum bids are called for, he will be required to furnish all equipment, labor, materials and other items or cost to construct a complete facility. The undersigned bidder further understands that any deletions or additions designated on the outside of the bid envelope, must indicate the particular bid item relative to the deletion or addition, even if the deletion or addition references to deduct or add to the Total Base Bid.

Contractors are authorized to download quantities, Attachment "A", or quantity revisions from COH Engineering website and paste to a CD-RW (preferably in a live/flash drive format) of their choice which must be submitted with the original bid packet. In addition, two hard copies must be signed and submitted with original bid packet. Failure to do so may be cause for rejection of bid. The City reserves the right to reject any altered bid resulting from altering the bid CD in any manner. If a price discrepancy is found on the CD-RW, or the correct version of bid quantities is not submitted on the CD-RW which corresponds to the printed hard copies, then printed hard copy prices submitted with original bid documents, with Contractor signature, will prevail.

Certificates of Insurance are required naming the City as the Certificate Holder. Also, the name of the project and project number should be included on the certificate. The Certificates should reflect the insurance coverage required herein. In addition, a copy of the policy may be requested upon award. Certificates signed using digital signatures will not be accepted unless accompanied by a written statement from the insurance/surety company indicating that their electronic signature is intended as their signature. The Certificates are to be signed by a person authorized by the insurer to bind coverage on its behalf and must indicate coverage will not be canceled or non-renewed except after thirty (30) days prior written notice to the City at the following address: City of Huntsville, P.O. Box 308, Huntsville, Alabama 35804 ATTN: Penny Kelly.

The undersigned bidder understands that the Contract Time for completion of all work is Three Hundred and Sixty-Five (365) calendar days; however, if Options are awarded, an additional One Hundred and Fifteen (115) calendar days will be added making the total Four Hundred and Eighty (480) calendar days.

DOWNTOWN GATEWAY (HARVARD ROAD EXTENSION)-REBID
PROJECT NO. 65-11-RD03
Page 2

THE UNDERSIGNED BIDDER ALSO AGREES AS FOLLOWS:
All bonds must be approved by the Mayor and the Clerk-Treasurer of the City of Huntsville. Within fifteen (15) days after the date of acceptance of this proposal by City Council action, the contractor shall execute the contract and furnish to the OWNER a payment (labor and material) bond and a performance bond, each in the amount of 100% of the contract amount. No contract extension will be allowed for delays in the issuance of the notice to proceed that are a result of the contractor failing to submit the required items within the 15 days.

It is further understood and agreed that the Contractor shall commence work to be performed under this contract within fifteen (15) days from the date of this contract, unless otherwise instructed in writing by the OWNER. All work shall be carried on continuously to completion.

Accompanying this proposal is a certified check or bid bond in the amount of not less than five percent (5%) of the total amount shown on the schedule of prices not exceeding $10,000.00 payable to the City of Huntsville, Alabama, which is to be forfeited, as liquidated damages, if, in the event that his proposal is accepted, the undersigned shall fail to execute the contract and furnish a satisfactory contract bond under the conditions and within the time specified in this proposal; otherwise, said certified check or bid bond is to be returned to the undersigned.

DATED: August 5, 20 14.

(IF AN INDIVIDUAL, PARTNERSHIP, OR NON-INCORPORATED ORGANIZATION)
SIGNATURE OF BIDDER _____

BY _____

ADDRESS OF BIDDER _____

NAMES AND ADDRESSES OF MEMBERS OF THE FIRM:

_____ _____

_____ _____

OUR CONTRACTOR'S STATE LICENSE NO. IS 5957

(IF A CORPORATION)
SIGNATURE OF BIDDER _____

BY Mickey Donahue

BUSINESS ADDRESS 3848 Highway 20, Trinity, AL

INCORPORATED UNDER THE LAWS OF THE STATE OF Alabama

NAMES OF OFFICERS

PRESIDENT John Harper

SECRETARY _____

TREASURER _____

MANDATORY ACKNOWLEDGEMENT OF ADDENDA: Addenda will only be faxed to those bidders who attend and have signed in at the pre-bid meeting. **IT IS THE RESPONSIBILITY OF ALL BIDDERS TO REFER TO THE WEBSITE FOR ANY UPDATES.**

1 _____ _____ _____ _____ _____

ATTACHMENT "C"

DOWNTOWN GATEWAY (HARVARD ROAD EXTENSION)-R BID
PROJECT NO. 65-11-RD03

SUBCONTRACTOR'S LISTING

All subcontractors must be approved in writing by Owner. Any additional subcontractors needed during the contract period shall be approved by written letter from the Owner. Contractor shall **immediately** notify Mary Hollingsworth via email at mary.hollingsworth@huntsvilleal.gov and the Owner's project inspector of any changes to subcontractor list for the duration of the project.

TASKS TO BE PERFORMED	SUBCONTRACTOR NAME	LICENSE NO.	ADDRESS	ITEM #'S OF WORK TO BE PERFORMED
Surveying/Layout				
Permitting				
Clearing & Grubbing	STANLEY	9911	4410 EVANGEL CIR	CLEARING
Erosion Control			HUNTSVILLE, AL	EARTHWORK
Traffic Control	AL BARRICADE	21730	PO BOX 832	TRAFFIC CONTROL
Excavation	STANLEY		TRUSSVILLE, AL	PERM SIGNS
Concrete	MILLER & MILLER			
Storm Drainage	ALL POWER	19804	7763 HWY 53	STORM DRAINAGE
Sanitary Sewer	ALL POWER		HUNTSVILLE, AL	SANITARY SEWER
Shoring/Monitoring	MILLER & MILLER			
Retaining Walls	↓			
Bridges				
Railroads				
Traffic (signals, loops)	SHOALS	9168	PO BOX 2448	ALL SIGNALS
Street Lights	↓		MUSCLE SHOALS, AL	LIGHTING & ELEC.
Electrical				
Water				
Asphalt				
Landscaping (Trees, grassing)	BIG CREEK LANDSCAPING	S-23098	1880 CAMPBELLVILLE RD	ALL LANDSCAPING
Irrigation			PULASKI, TN	IRRIGATION
Striping	JC CHEEK	11303	PO BOX 1138	ALL STRIPING
Sewer Testing			KOSCIUSKO, MS	
Guardrails				
Handrails				
Painting				
Special (fencing, benches, dewatering etc.)	MILLER & MILLER	4166	2106 MILLER FERRY WAY	BRIDGE, HARDSCAPE
Mechanical			HUNTSVILLE, AL	CONCRETE PAVING
SCADA				

ATTACHMENT "D"

DOWNTOWN GATEWAY (HARVARD ROAD EXTENSION)-REBID
PROJECT NO. 65-11-RD03

Contractor shall provide at least five (5) references including NAME OF PROJECT, Owner Name, address, phone number and contact name that demonstrates contractor's ability on similar projects.

1. Resurface Residential Streets (2013), Phase I Project # 65-13-RR01 ($2,233,822.29)
   City of Huntsville, Alabama
   P.O. Box 308
   Huntsville, AL 35804
   Cynthia Higgins, 256-947-8381

2. HSIP-0099(504) & 99-301-421-099-101 Limestone County ($3,387,065.89)
   Alabama Department of Transportation
   P.O. Box 550
   Guntersville, AL 35976
   Carlos Broadway, 256-216-1062

3. Redstone Arsenal Gateway, Package 1B Project # 65-11-SP05 ($2,097,000.00)
   City of Huntsville, Alabama
   P.O. Box 308
   Huntsville, AL 35804
   Matt Kelly (Project GC: Brasfield & Gorrie) 205-714-1394

4. IM-I565(309) & NH-0002(541) Madison County ($8,376,557.39)
   Alabama Department of Transportation
   P.O. Box 550
   Guntersville, AL 35976
   Angelia Fuller, 256-837-2056

5. Resurfacing of Residential Streets (2009), Phase II Project # 65-09-RR02 ($677,000.00)
   City of Huntsville, Alabama
   P.O. Box 308
   Huntsville, AL 35804
   Terry Hatfield, 256-883-3940

ATTACHMENT "E"

Pre-Bid meeting to be held on Wednesday, July 23, 2014 at 10:00 a.m., in the 1st Floor Conference Room at 320 Fountain Circle, Huntsville, AL 35801.

NOTICE TO CONTRACTORS

WANTED: Sealed bids in duplicate for the construction of: Downtown Gateway (Harvard Road Extension)-REBID, more particularly known as Project No. 65-11-RD03

Description of Project: Construction of approximately 1,600 LF of 4-lane roadway between Governors Drive and Williams Avenue in Huntsville, Alabama to include Bridge, Streetscape, Landscaping, Irrigation and Street Lights.

The attention of all bidders is called to Code of Alabama §§ 34-8-1 and 34-8-2 (1975) and 34-8-1, 34-8-2, 34-8-4, 34-8-6, 34-8-7, 34-8-8 and 34-8-9 (amended 1996) setting forth the definition of general contractor and the licensing procedures and requirements for state licensing. A copy of the above Codes may be obtained from the OWNER (City of Huntsville). No one is entitled to bid and no contract may be awarded to anyone who does not possess a valid general contractor's license and the required classification for the municipal type work to be performed. The general contractor's license and classification must appear on the outside of the bid envelope along with the general contractor's name and address, project name and number and date and time of bid opening. Section 39-3-5 Code of Alabama has been amended as follows:

"In awarding the Contract, preference will be given to Alabama resident contractors and a nonresident bidder domiciled in a state having laws granting preference to local contractors shall be awarded the Contract only on the same basis as the nonresident bidder's state awards contracts to Alabama contractors bidding under similar circumstances."

This project Downtown Gateway (Harvard Road Extension)-REBID, more particularly known as Project No. 65-11-RD03 requires the contractor to possess a State of Alabama Classification of (HS) Highways and Streets or (MU) Municipal & Utility.

After proposals are opened and read, they will be compared on the basis of the summation of the products or approximate quantities shown in Attachment "A", multiplied by the unit bid prices. In the event of a discrepancy between unit bid prices and extensions, the unit bid price shall govern. A proposal will not be considered unless signed by the bidder or his authorized agent and accompanied by cashier's check or properly signed bid bond, as required by law.

In determining the successful bidder, the Owner will consider in addition to the bid prices, such responsibility factors as characteristics and responsibility, skill, experience, record of integrity in business, and of performance offered and past record of performance on Owner contracts on other similar projects. Any other factors not specifically mentioned or provided for herein, in addition to that of the bid price which would affect the final cost of the Owner, will be taken into consideration in making award of contract. The right is reserved to reject any bid where investigation of the business and technical organization of the bidder available for the contemplated work, including financial resources, equipment, and experience on similar projects does not satisfy the Owner that such bidder is qualified to perform the work. The City Council of the City of Huntsville reserves the right to reject any and all bids and to waive informalities.

Separate sealed bids for the construction of this project will be received at the City of Huntsville Public Services Building, 320 Fountain Circle, in the 1st Floor in the Conference Room, on the 31st day of July, 2014, until 9:00 a.m. Each bid shall be accompanied by an original signed, dated and sealed Bid Bond in the amount of not less than five percent (5%) of the total shown on the schedule of prices, but not exceeding $10,000.00. Quantities are known as Attachment "A". No bidder may withdraw his bid within ninety (90) days after the actual date of opening.

These Addenda, Special Provisions, Plans, the Supplement to General Requirements for Construction of Public Improvements City of Huntsville Specifications, Standard Specifications for Construction of Public Improvements Contract Projects and all supplementary documents are essential parts of the contract, and a requirement occurring in one is as binding as though occurring in all. They are intended to be complimentary and to describe and provide for a complete work. Contract Document Order of Precedence shall be as follows:

1. **Addenda**
2. **General Requirements (Instructions to Bidders and Bid Proposal including Attachments)**
3. **Supplement to General Requirements**
4. **Drawings / City of Huntsville Standard Specifications for Construction of Public Improvements Contract Projects 1991**
5. **Supplemental Specifications (Earthwork, Chain Link Fences, and Gates)**
6. **Special Conditions**
7. **Current ALDOT Specifications**

Standard Specifications for Construction of Public Improvements Contract Projects and Engineering Standards are available at no charge by downloading from the City Engineering website: www.huntsvilleal.gov/engineering. Plans and proposals can be downloaded from our website at no cost: www.huntsvilleal.gov/engineering/bidlist.html Contractors will be responsible for costs of duplicating their own plans and can choose photocopying facility of their choice. Additionally, Contractors are responsible for checking website for any revisions/updates. Contractor is required to submit pricing, provided by the COH (Attachment "A") and made available for download from the Engineering website, on either a 3 ½" floppy disk or CD-RW (preferably in a live/flash drive format) in the Excel format.

The bid disk or the CD-RW (preferably in a live/flash drive format) must be in working condition and included with original bid packet and reflect the correct revision, along with two signed hard copies. Failure to do so may be cause for rejection of bid. If a price discrepancy is found on bid disk or CD-RW, or the correct version of bid quantities is not submitted on the disk or CD-RW which corresponds to the printed hard copy, then printed hard copy prices submitted with original bid documents, with Contractor signature, will prevail.

E-VERIFY – NOTICE

The Beason-Hammon Alabama Taxpayer and Citizen Protection Act, Act No. 2011-535, Code of Alabama (1975) § 31-13-1 through 31-13-30 (also known as and hereinafter referred to as " the Alabama Immigration Act") as amended by Act No. 2012-491 on May 16, 2012 is applicable to all competitively bid contracts with the City of Huntsville. As a condition for the award of a contract and as a term and condition of the contract with the City of Huntsville, in accordance with § 31-13-9 (a) of the Alabama Immigration Act, as amended, any business entity or employer that employs one or more employees shall not knowingly employ, hire for employment, or continue to employ an unauthorized alien within the State of Alabama. During the performance of the contract, such business entity or employer shall participate in the E-Verify program and shall verify every employee that is required to be verified according to the applicable federal rules and regulations. The business entity or employer shall assure that these requirements are included in each subcontract in accordance with §31-13-9(c). Failure to comply with these requirements may result in breach of contract, termination of the contract or subcontract, and possibly suspension or revocation of business licenses and permits in accordance with §31-13-9 (e) (1) & (2). Code of Alabama (1975) § 31-13-9 (k) requires that the following clause be included in all City of Huntsville contracts that have been competitively bid and is hereby made a part of this contract:

"By signing this contract the contracting parties affirm, for the duration of the agreement, that they will not violate federal immigration law or knowingly employ, hire for employment, or continue to employ an unauthorized alien within the State of Alabama. Furthermore, a contracting party found to be in violation of this provision shall be deemed in breach of the agreement and shall be responsible for all damages resulting therefrom."

Contractor's E-Verify Memorandum of Understanding shall be a part of the contract bid documents and shall be submitted with the bid package.

ALABAMA IMMIGRATION ACT (Beason-Hammon Alabama Taxpayer and Citizen Protection Act, Act No. 2011-535, Code of Alabama (1975)

Compliance with the requirements of the (Beason-Hammon Alabama Taxpayer and Citizen Protection Act, Act No. 2011-535, Code of Alabama (1975) § 31-13-1 through 31-13-30, as amended by Alabama Act 2012-241, commonly referred to as the Alabama Immigration Law, is required for City of Huntsville, Alabama contracts that are competitively bid as a condition of the contract performance. The Contractor shall submit in the bid package, with the requested information included on the form, the "City of Huntsville, Alabama Report of Ownership Form" listed in the bid proposal as Attachment "H". The bidder selected for award of the contract may be required to complete additional forms relating to citizenship or alien status of the bidder and its employees, including e-verify information, prior to award of a contract.

Advertise Date: 7/16/14

ATTACHMENT "F"

SAMPLE FORM

REQUEST FOR PAYMENT
CITY OF HUNTSVILLE ENGINEERING DIVISION

PROJECT NAME AND NUMBER:

ESTIMATE NUMBER. ONE (1) PERIOD FROM 03/11/05 TO

CONTRACT DURATION 0 DAYS
START DATE: 03/11/05 END DATE: 3/11/05 TOTAL CONTRACT TIME (3) 0 DAYS

REFER TO COH SUPPLEMENT TO GENERAL REQUIREMENTS: CHANGE ORDERS - CHANGE TO CONTRACT TIME

TIME C.O # 1 DAYS ADDED 0
TIME C.O. # 2 DAYS ADDED 0 CONTRACT DAYS REMAINING 0

TOTAL CONTRACT AMOUNT (1) AS AWARDED $ 200,000.00 CURRENT $ 200,000.00

C.O. # 1 $ -
C.O. # 2 $ -

TOTAL AMOUNT EARNED TO DATE LESS STORED MATERIALS (2): $ -

MATERIAL STORED (INVOICE ATTACHED) $ -

RETAINAGE (5%) OF 50% OF CONTRACT $ -

Amount is in accordance with ALDOT and COH specifications and is based on the contract amount before change orders.

AMOUNT EARNED AFTER RETAINAGE $ -

LIQUIDATED DAMAGES PER DAY 300

LIQUIDATED DAMAGES ASSESSED TO DATE: -

FOR QUESTIONS RELATED TO PAYMENT CALCULATIONS, LIQUIDATED DAMAGES, AND CHANGE ORDER REQUIREMENTS, PLEASE REFERENCE YOUR CONTRACT
SUPPLEMENT TO GENERAL REQUIREMENTS SECTION,
4. CHANGE ORDERS.
12. PAYMENT.
[illegible]

Damages, if applicable, will automatically be calculated by subtracting the contract end date from the invoice period end date and multiplying the days by the daily damages amount. Damages will automatically be deducted from amounts otherwise due.

TOTAL AMOUNT PREVIOUSLY APPROVED TO DATE: $ -

AMOUNT DUE THIS ESTIMATE WITHOUT LIQUIDATED DAMAGES $ -

A: % OF TIME ELAPSED: TIME ELASPED TO DATE / TOTAL CONTRACT TIME (3) 0 DAYS DAYS =

B: PROJECT COMPLETION: TOTAL EARNED TO DATE (2) - / TOTAL CONTRACT AMOUNT 200,000.00 = 0%

C: PROGRESS OF WORK: B - A: =

CONTRACTORS CERTIFICATE

I, _____ the duly qualified, acting and authorized agent for the contractor _____ on the above project, do hereby certify that we have performed all of the work set forth in strict accordance with the plans, specifications, laws and ordinances applicable thereto, and do further certify that all materials, labor, and equipment listed herein have been paid for in full as allowed on all prior estimates and if requested to do so, we will show evidence of payment for the same in writing before the final payment of this estimate. We further certify that the amount received hereunder is considered compensation and final payment in full for all work performed under the contract, including any amendments thereto and, upon payment of said sum, hereby release the Owner, its employees, agents, and representatives in accordance with said contract. We further certify that we fully guarantee all work performed hereunder for a period of twelve months from the date of payment of the final estimate (in accordance with the terms of our original contract and all amendments thereto), during which time all terms and conditions of the original contract document shall remain in full force and effect, including the insurance requirements, Hold Harmless Agreement, and Indemnifying Agreement as contained in said contract documents.

CERTIFIED FOR PAYMENT ON THIS THE _____ DAY OF _____

BY _____ CONTRACTOR _____

TITLE _____

SIGNED: _____ WITNESS: _____
SIGNATURE

We have checked the quantities and extensions to this estimate, and to the best of our knowledge the estimate is true and correct.

APPROVED FOR PAYMENT

BY _____
CONSTRUCTION INSPECTOR

BY _____
PROJECT ENGINEER

BY _____
SHANE DAVIS, CITY ENGINEER
OR RON ADAMS, DEPUTY CITY ENGINEER
OR LYNN MAJORS, ADMINISTRATIVE OFFICER

IF FINAL ESTIMATE, DATE WORK WAS COMPLETED _____

ATTACHMENT "G"

All vendors/contractors are required to submit a Federal Tax Form W-9 to City of Huntsville at the time a contract is awarded, unless vendor/contractor is already registered and doing business with the City. No payments of invoices can be made until this W-9 Tax Form has been properly submitted. A copy of the W-9 Tax Form can be obtained at the following website: www.irs.ustreas.gov/pub/irs-pdf/fw9.pdf

ATTACHMENT "H"

CITY OF HUNTSVILLE, ALABAMA REPORT OF OWNERSHIP FORM

A. General Information. Please provide the following information:

- Legal name(s) (include "doing business as", if applicable): Wiregrass Construction Company, Inc.
- City of Huntsville current taxpayer identification number (if available): 28743
  (Please note that if this number has been assigned by the City and if you are renewing your business license, the number should be listed on the renewal form.)

B. Type of Ownership. Please complete the un-shaded portions of the following chart by checking the appropriate box below and entering the appropriate Entity I.D. Number, if applicable (for an explanation of what an entity number is, please see paragraph C below):

Type of Ownership (*check appropriate box*)	Entity I. D. Number & Applicable State
☐ Individual or Sole Proprietorship	Not Applicable
☐ General Partnership	Not Applicable
☐ Limited Partnership (LP)	Number & State:
☐ Limited Liability Partnership (LLP)	Number & State:
☐ Limited Liability Company (LLC) (Single Member)	Number & State:
☐ LLC (Multi-Member)	Number & State:
☒ Corporation	Number & State: 020-223 Alabama
☐ Other, please explain:	Number & State (if a filing entity under state law):

C. Entity I.D. Numbers. If an Entity I.D. Number is required and if the business entity is registered in this state, the number is available through the website of Alabama's Secretary of State at: www.sos.state.al.us/, under "Government Records". If a foreign entity is not registered in this state please provide the Entity I.D. number (or other similar number by whatever named called) assigned by the state of formation along with the name of the state.

D. Formation Documents. Please note that, with regard to entities, the entity's formation documents, including articles or certificates of incorporation, organization, or other applicable formation documents, as recorded in the probate records of the applicable county and state of formation, *are not required unless*: (1) specifically requested by the City, or (2) an Entity I.D. Number is required and one has not been assigned or provided.

Please date and sign this form in the space provided below and either write legibly or type your name under your signature. If you are signing on behalf of an entity please insert your title as well.

Signature: [signature] Title (if applicable): Vice President

Type or legibly write name: Mickey Donahue Date: August 5, 2014

E-Verify

Company ID Number: 345983

THE E-VERIFY PROGRAM FOR EMPLOYMENT VERIFICATION MEMORANDUM OF UNDERSTANDING

ARTICLE I

PURPOSE AND AUTHORITY

This Memorandum of Understanding (MOU) sets forth the points of agreement between the Department of Homeland Security (DHS) and **WIREGRASS CONSTRUCTION COMPANY,INC.** (Employer) regarding the Employer's participation in the Employment Eligibility Verification Program (E-Verify). This MOU explains certain features of the E-Verify program and enumerates specific responsibilities of DHS, the Social Security Administration (SSA), and the Employer. E-Verify is a program that electronically confirms an employee's eligibility to work in the United States after completion of the Employment Eligibility Verification Form (Form I-9). For covered government contractors, E-Verify is used to verify the employment eligibility of all newly hired employees and all existing employees assigned to Federal contracts or to verify the entire workforce if the contractor so chooses.

Authority for the E-Verify program is found in Title IV, Subtitle A, of the Illegal Immigration Reform and Immigrant Responsibility Act of 1996 (IIRIRA), Pub. L. 104-208, 110 Stat. 3009, as amended (8 U.S.C. § 1324a note). Authority for use of the E-Verify program by Federal contractors and subcontractors covered by the terms of Subpart 22.18, "Employment Eligibility Verification", of the Federal Acquisition Regulation (FAR) (hereinafter referred to in this MOU as a "Federal contractor with the FAR E-Verify clause") to verify the employment eligibility of certain employees working on Federal contracts is also found in Subpart 22.18 and in Executive Order 12989, as amended.

ARTICLE II

FUNCTIONS TO BE PERFORMED

A. RESPONSIBILITIES OF SSA

1. SSA agrees to provide the Employer with available information that allows the Employer to confirm the accuracy of Social Security Numbers provided by all employees verified under this MOU and the employment authorization of U.S. citizens.

2. SSA agrees to provide to the Employer appropriate assistance with operational problems that may arise during the Employer's participation in the E-Verify program. SSA agrees to provide the Employer with names, titles, addresses, and telephone numbers of SSA representatives to be contacted during the E-Verify process.

3. SSA agrees to safeguard the information provided by the Employer through the E-Verify program procedures, and to limit access to such information, as is appropriate by law, to individuals responsible for the verification of Social Security Numbers and for evaluation of the E-Verify program or such other persons or entities who may be authorized by SSA as governed

Company ID Number: 345983

by the Privacy Act (5 U.S.C. § 552a), the Social Security Act (42 U.S.C. 1306(a)), and SSA regulations (20 CFR Part 401).

4. SSA agrees to provide a means of automated verification that is designed (in conjunction with DHS's automated system if necessary) to provide confirmation or tentative nonconfirmation of U.S. citizens' employment eligibility within 3 Federal Government work days of the initial inquiry.

5. SSA agrees to provide a means of secondary verification (including updating SSA records as may be necessary) for employees who contest SSA tentative nonconfirmations that is designed to provide final confirmation or nonconfirmation of U.S. citizens' employment eligibility and accuracy of SSA records for both citizens and non-citizens within 10 Federal Government work days of the date of referral to SSA, unless SSA determines that more than 10 days may be necessary. In such cases, SSA will provide additional verification instructions.

B. RESPONSIBILITIES OF DHS

1. After SSA verifies the accuracy of SSA records for employees through E-Verify, DHS agrees to provide the Employer access to selected data from DHS's database to enable the Employer to conduct, to the extent authorized by this MOU:

- Automated verification checks on employees by electronic means, and
- Photo verification checks (when available) on employees.

2. DHS agrees to provide to the Employer appropriate assistance with operational problems that may arise during the Employer's participation in the E-Verify program. DHS agrees to provide the Employer names, titles, addresses, and telephone numbers of DHS representatives to be contacted during the E-Verify process.

3. DHS agrees to make available to the Employer at the E-Verify Web site and on the E-Verify Web browser, instructional materials on E-Verify policies, procedures and requirements for both SSA and DHS, including restrictions on the use of E-Verify. DHS agrees to provide training materials on E-Verify.

4. DHS agrees to provide to the Employer a notice, which indicates the Employer's participation in the E-Verify program. DHS also agrees to provide to the Employer anti-discrimination notices issued by the Office of Special Counsel for Immigration-Related Unfair Employment Practices (OSC), Civil Rights Division, U.S. Department of Justice.

5. DHS agrees to issue the Employer a user identification number and password that permits the Employer to verify information provided by employees with DHS's database.

6. DHS agrees to safeguard the information provided to DHS by the Employer, and to limit access to such information to individuals responsible for the verification of employees' employment eligibility and for evaluation of the E-Verify program, or to such other persons or entities as may be authorized by applicable law. Information will be used only to verify the accuracy of Social Security Numbers and employment eligibility, to enforce the Immigration and

Company ID Number: 345983

Nationality Act (INA) and Federal criminal laws, and to administer Federal contracting requirements.

7. DHS agrees to provide a means of automated verification that is designed (in conjunction with SSA verification procedures) to provide confirmation or tentative nonconfirmation of employees' employment eligibility within 3 Federal Government work days of the initial inquiry.

8. DHS agrees to provide a means of secondary verification (including updating DHS records as may be necessary) for employees who contest DHS tentative nonconfirmations and photo non-match tentative nonconfirmations that is designed to provide final confirmation or nonconfirmation of the employees' employment eligibility within 10 Federal Government work days of the date of referral to DHS, unless DHS determines that more than 10 days may be necessary. In such cases, DHS will provide additional verification instructions.

C. RESPONSIBILITIES OF THE EMPLOYER

1. The Employer agrees to display the notices supplied by DHS in a prominent place that is clearly visible to prospective employees and all employees who are to be verified through the system.

2. The Employer agrees to provide to the SSA and DHS the names, titles, addresses, and telephone numbers of the Employer representatives to be contacted regarding E-Verify.

3. The Employer agrees to become familiar with and comply with the most recent version of the E-Verify User Manual.

4. The Employer agrees that any Employer Representative who will perform employment verification queries will complete the E-Verify Tutorial before that individual initiates any queries.

A. The Employer agrees that all Employer representatives will take the refresher tutorials initiated by the E-Verify program as a condition of continued use of E-Verify.

B. Failure to complete a refresher tutorial will prevent the Employer from continued use of the program.

5. The Employer agrees to comply with current Form I-9 procedures, with two exceptions:

• If an employee presents a "List B" identity document, the Employer agrees to only accept "List B" documents that contain a photo. (List B documents identified in 8 C.F.R. § 274a.2(b)(1)(B)) can be presented during the Form I-9 process to establish identity.) If an employee objects to the photo requirement for religious reasons, the Employer should contact E-Verify at 888-464-4218.

• If an employee presents a DHS Form I-551 (Permanent Resident Card) or Form I-766 (Employment Authorization Document) to complete the Form I-9, the Employer agrees to make a photocopy of the document and to retain the photocopy with the employee's Form I-9. The photocopy must be of sufficient quality to allow for verification of the photo

Company ID Number: 345983

and written information. The employer will use the photocopy to verify the photo and to assist DHS with its review of photo non-matches that are contested by employees. Note that employees retain the right to present any List A, or List B and List C, documentation to complete the Form I-9. DHS may in the future designate other documents that activate the photo screening tool.

6. The Employer understands that participation in E-Verify does not exempt the Employer from the responsibility to complete, retain, and make available for inspection Forms I-9 that relate to its employees, or from other requirements of applicable regulations or laws, including the obligation to comply with the antidiscrimination requirements of section 274B of the INA with respect to Form I-9 procedures, except for the following modified requirements applicable by reason of the Employer's participation in E-Verify: (1) identity documents must have photos, as described in paragraph 5 above; (2) a rebuttable presumption is established that the Employer has not violated section 274A(a)(1)(A) of the Immigration and Nationality Act (INA) with respect to the hiring of any individual if it obtains confirmation of the identity and employment eligibility of the individual in good faith compliance with the terms and conditions of E-Verify; (3) the Employer must notify DHS if it continues to employ any employee after receiving a final nonconfirmation, and is subject to a civil money penalty between $550 and $1,100 for each failure to notify DHS of continued employment following a final nonconfirmation; (4) the Employer is subject to a rebuttable presumption that it has knowingly employed an unauthorized alien in violation of section 274A(a)(1)(A) if the Employer continues to employ an employee after receiving a final nonconfirmation; and (5) no person or entity participating in E-Verify is civilly or criminally liable under any law for any action taken in good faith based on information provided through the confirmation system. DHS reserves the right to conduct Form I-9 and E-Verify system compliance inspections during the course of E-Verify, as well as to conduct any other enforcement activity authorized by law.

7. The Employer agrees to initiate E-Verify verification procedures for new employees within 3 Employer business days after each employee has been hired (but after the Form I-9 has been completed), and to complete as many (but only as many) steps of the E-Verify process as are necessary according to the E-Verify User Manual, or in the case of Federal contractors with the FAR E-Verify clause, the E-Verify User Manual for Federal Contractors. The Employer is prohibited from initiating verification procedures before the employee has been hired and the Form I-9 completed. If the automated system to be queried is temporarily unavailable, the 3-day time period is extended until it is again operational in order to accommodate the Employer's attempting, in good faith, to make inquiries during the period of unavailability. Employers may initiate verification by notating the Form I-9 in circumstances where the employee has applied for a Social Security Number (SSN) from the SSA and is waiting to receive the SSN, provided that the Employer performs an E-Verify employment verification query using the employee's SSN as soon as the SSN becomes available.

8. The Employer agrees not to use E-Verify procedures for pre-employment screening of job applicants, in support of any unlawful employment practice, or for any other use not authorized by this MOU. Employers must use E-Verify for all new employees, unless an Employer is a Federal contractor that qualifies for the exceptions described in Article II.D.1.c. Except as provided in Article II.D, the Employer will not verify selectively and will not verify employees hired before the effective date of this MOU. The Employer understands that if the Employer

Company ID Number: 345983

uses the E-Verify system for any purpose other than as authorized by this MOU, the Employer may be subject to appropriate legal action and termination of its access to SSA and DHS information pursuant to this MOU.

9. The Employer agrees to follow appropriate procedures (see Article III. below) regarding tentative nonconfirmations, including notifying employees in private of the finding and providing them written notice of the findings, providing written referral instructions to employees, allowing employees to contest the finding, and not taking adverse action against employees if they choose to contest the finding. Further, when employees contest a tentative nonconfirmation based upon a photo non-match, the Employer is required to take affirmative steps (see Article III.B. below) to contact DHS with information necessary to resolve the challenge.

10. The Employer agrees not to take any adverse action against an employee based upon the employee's perceived employment eligibility status while SSA or DHS is processing the verification request unless the Employer obtains knowledge (as defined in 8 C.F.R. § 274a.1(l)) that the employee is not work authorized. The Employer understands that an initial inability of the SSA or DHS automated verification system to verify work authorization, a tentative nonconfirmation, a case in continuance (indicating the need for additional time for the government to resolve a case), or the finding of a photo non-match, does not establish, and should not be interpreted as evidence, that the employee is not work authorized. In any of the cases listed above, the employee must be provided a full and fair opportunity to contest the finding, and if he or she does so, the employee may not be terminated or suffer any adverse employment consequences based upon the employee's perceived employment eligibility status (including denying, reducing, or extending work hours, delaying or preventing training, requiring an employee to work in poorer conditions, refusing to assign the employee to a Federal contract or other assignment, or otherwise subjecting an employee to any assumption that he or she is unauthorized to work) until and unless secondary verification by SSA or DHS has been completed and a final nonconfirmation has been issued. If the employee does not choose to contest a tentative nonconfirmation or a photo non-match or if a secondary verification is completed and a final nonconfirmation is issued, then the Employer can find the employee is not work authorized and terminate the employee's employment. Employers or employees with questions about a final nonconfirmation may call E-Verify at 1-888-464-4218 or OSC at 1-800-255-8155 or 1-800-237-2515 (TDD).

11. The Employer agrees to comply with Title VII of the Civil Rights Act of 1964 and section 274B of the INA, as applicable, by not discriminating unlawfully against any individual in hiring, firing, or recruitment or referral practices because of his or her national origin or, in the case of a protected individual as defined in section 274B(a)(3) of the INA, because of his or her citizenship status. The Employer understands that such illegal practices can include selective verification or use of E-Verify except as provided in part D below, or discharging or refusing to hire employees because they appear or sound "foreign" or have received tentative nonconfirmations. The Employer further understands that any violation of the unfair immigration-related employment practices provisions in section 274B of the INA could subject the Employer to civil penalties, back pay awards, and other sanctions, and violations of Title VII could subject the Employer to back pay awards, compensatory and punitive damages. Violations of either section 274B of the INA or Title VII may also lead to the termination of its participation in E-

Company ID Number: 345983

Verify. If the Employer has any questions relating to the anti-discrimination provision, it should contact OSC at 1-800-255-8155 or 1-800-237-2515 (TDD).

12. The Employer agrees to record the case verification number on the employee's Form I-9 or to print the screen containing the case verification number and attach it to the employee's Form I-9.

13. The Employer agrees that it will use the information it receives from SSA or DHS pursuant to E-Verify and this MOU only to confirm the employment eligibility of employees as authorized by this MOU. The Employer agrees that it will safeguard this information, and means of access to it (such as PINS and passwords) to ensure that it is not used for any other purpose and as necessary to protect its confidentiality, including ensuring that it is not disseminated to any person other than employees of the Employer who are authorized to perform the Employer's responsibilities under this MOU, except for such dissemination as may be authorized in advance by SSA or DHS for legitimate purposes.

14. The Employer acknowledges that the information which it receives from SSA is governed by the Privacy Act (5 U.S.C. § 552a(i)(1) and (3)) and the Social Security Act (42 U.S.C. 1306(a)), and that any person who obtains this information under false pretenses or uses it for any purpose other than as provided for in this MOU may be subject to criminal penalties.

15. The Employer agrees to cooperate with DHS and SSA in their compliance monitoring and evaluation of E-Verify, including by permitting DHS and SSA, upon reasonable notice, to review Forms I-9 and other employment records and to interview it and its employees regarding the Employer's use of E-Verify, and to respond in a timely and accurate manner to DHS requests for information relating to their participation in E-Verify.

D. RESPONSIBILITIES OF FEDERAL CONTRACTORS WITH THE FAR E-VERIFY CLAUSE

1. The Employer understands that if it is a subject to the employment verification terms in Subpart 22.18 of the FAR, it must verify the employment eligibility of any existing employee assigned to the contract and all new hires, as discussed in the Supplemental Guide for Federal Contractors. Once an employee has been verified through E-Verify by the Employer, the Employer may not reverify the employee through E-Verify.

a. Federal contractors with the FAR E-Verify clause agree to become familiar with and comply with the most recent versions of the E-Verify User Manual for Federal Contractors and the E-Verify Supplemental Guide for Federal Contractors.

b. Federal contractors with the FAR E-Verify clause agree to complete a tutorial for Federal contractors with the FAR E-Verify clause.

c. Federal contractors with the FAR E-Verify clause not enrolled at the time of contract award: An Employer that is not enrolled in E-Verify at the time of a contract award must enroll as a Federal contractor with the FAR E-Verify clause in E-Verify within 30 calendar days of contract award and, within 90 days of enrollment, begin to use E-Verify to initiate verification of employment eligibility of new hires of the Employer who are working in the United States,

Company ID Number: 345983

whether or not assigned to the contract. Once the Employer begins verifying new hires, such verification of new hires must be initiated within 3 business days after the date of hire. Once enrolled in E-Verify as a Federal contractor with the FAR E-Verify clause, the Employer must initiate verification of employees assigned to the contract within 90 calendar days from the time of enrollment in the system and after the date and selecting which employees will be verified in E-Verify or within 30 days of an employee's assignment to the contract, whichever date is later.

d. Employers that are already enrolled in E-Verify at the time of a contract award but are not enrolled in the system as a Federal contractor with the FAR E-Verify clause: Employers enrolled in E-Verify for 90 days or more at the time of a contract award must use E-Verify to initiate verification of employment eligibility for new hires of the Employer who are working in the United States, whether or not assigned to the contract, within 3 business days after the date of hire. Employers enrolled in E-Verify as other than a Federal contractor with the FAR E-Verify clause, must update E-Verify to indicate that they are a Federal contractor with the FAR E-Verify clause within 30 days after assignment to the contract. If the Employer is enrolled in E-Verify for 90 calendar days or less at the time of contract award, the Employer must, within 90 days of enrollment, begin to use E-Verify to initiate verification of new hires of the contractor who are working in the United States, whether or not assigned to the contract. Such verification of new hires must be initiated within 3 business days after the date of hire. An Employer enrolled as a Federal contractor with the FAR E-Verify clause in E-Verify must initiate verification of each employee assigned to the contract within 90 calendar days after date of contract award or within 30 days after assignment to the contract, whichever is later.

e. Institutions of higher education, State, local and tribal governments and sureties: Federal contractors with the FAR E-Verify clause that are institutions of higher education (as defined at 20 U.S.C. 1001(a)), State or local governments, governments of Federally recognized Indian tribes, or sureties performing under a takeover agreement entered into with a Federal agency pursuant to a performance bond may choose to only verify new and existing employees assigned to the Federal contract. Such Federal contractors with the FAR E-Verify clause may, however, elect to verify all new hires, and/or all existing employees hired after November 6, 1986. The provisions of Article II.D, paragraphs 1.a and 1.b of this MOU providing timeframes for initiating employment verification of employees assigned to a contract apply to such institutions of higher education, State, local and tribal governments, and sureties.

f. Verification of all employees: Upon enrollment, Employers who are Federal contractors with the FAR E-Verify clause may elect to verify employment eligibility of all existing employees working in the United States who were hired after November 6, 1986, instead of verifying only new employees and those existing employees assigned to a covered Federal contract. After enrollment, Employers must elect to do so only in the manner designated by DHS and initiate E-Verify verification of all existing employees within 180 days after the election.

g. Form I-9 procedures for existing employees of Federal contractors with the FAR E-Verify clause: Federal contractors with the FAR E-Verify clause may choose to complete new Forms I-9 for all existing employees other than those that are completely exempt from this process. Federal contractors with the FAR E-Verify clause may also update previously completed Forms I-9 to initiate E-Verify verification of existing employees who are not completely exempt as long as that Form I-9 is complete (including the SSN), complies with

Company ID Number: 345983

Article II.C.5, the employee's work authorization has not expired, and the Employer has reviewed the information reflected in the Form I-9 either in person or in communications with the employee to ensure that the employee's stated basis in section 1 of the Form I-9 for work authorization has not changed (including, but not limited to, a lawful permanent resident alien having become a naturalized U.S. citizen). If the Employer is unable to determine that the Form I-9 complies with Article II.C.5, if the employee's basis for work authorization as attested in section 1 has expired or changed, or if the Form I-9 contains no SSN or is otherwise incomplete, the Employer shall complete a new I-9 consistent with Article II.C.5, or update the previous I-9 to provide the necessary information. If section 1 of the Form I-9 is otherwise valid and up-to-date and the form otherwise complies with Article II.C.5, but reflects documentation (such as a U.S. passport or Form I-551) that expired subsequent to completion of the Form I-9, the Employer shall not require the production of additional documentation, or use the photo screening tool described in Article II.C.5, subject to any additional or superseding instructions that may be provided on this subject in the Supplemental Guide for Federal Contractors. Nothing in this section shall be construed to require a second verification using E-Verify of any assigned employee who has previously been verified as a newly hired employee under this MOU, or to authorize verification of any existing employee by any Employer that is not a Federal contractor with the FAR E-Verify clause.

2. The Employer understands that if it is a Federal contractor with the FAR E-Verify clause, its compliance with this MOU is a performance requirement under the terms of the Federal contract or subcontract, and the Employer consents to the release of information relating to compliance with its verification responsibilities under this MOU to contracting officers or other officials authorized to review the Employer's compliance with Federal contracting requirements.

ARTICLE III

REFERRAL OF INDIVIDUALS TO SSA AND DHS

A. REFERRAL TO SSA

1. If the Employer receives a tentative nonconfirmation issued by SSA, the Employer must print the notice as directed by the E-Verify system and provide it to the employee so that the employee may determine whether he or she will contest the tentative nonconfirmation. The Employer must review the tentative nonconfirmation with the employee in private.

2. The Employer will refer employees to SSA field offices only as directed by the automated system based on a tentative nonconfirmation, and only after the Employer records the case verification number, reviews the input to detect any transaction errors, and determines that the employee contests the tentative nonconfirmation. The Employer will transmit the Social Security Number to SSA for verification again if this review indicates a need to do so. The Employer will determine whether the employee contests the tentative nonconfirmation as soon as possible after the Employer receives it.

3. If the employee contests an SSA tentative nonconfirmation, the Employer will provide the employee with a system-generated referral letter and instruct the employee to visit an SSA office within 8 Federal Government work days. SSA will electronically transmit the result of the referral to the Employer within 10 Federal Government work days of the referral unless it

Company ID Number: 345983

determines that more than 10 days is necessary. The Employer agrees to check the E-Verify system regularly for case updates.

4. The Employer agrees not to ask the employee to obtain a printout from the Social Security Number database (the Numident) or other written verification of the Social Security Number from the SSA.

B. REFERRAL TO DHS

1. If the Employer receives a tentative nonconfirmation issued by DHS, the Employer must print the tentative nonconfirmation notice as directed by the E-Verify system and provide it to the employee so that the employee may determine whether he or she will contest the tentative nonconfirmation. The Employer must review the tentative nonconfirmation with the employee in private.

2. If the Employer finds a photo non-match for an employee who provides a document for which the automated system has transmitted a photo, the employer must print the photo non-match tentative nonconfirmation notice as directed by the automated system and provide it to the employee so that the employee may determine whether he or she will contest the finding. The Employer must review the tentative nonconfirmation with the employee in private.
3. The Employer agrees to refer individuals to DHS only when the employee chooses to contest a tentative nonconfirmation received from DHS automated verification process or when the Employer issues a tentative nonconfirmation based upon a photo non-match. The Employer will determine whether the employee contests the tentative nonconfirmation as soon as possible after the Employer receives it.

4. If the employee contests a tentative nonconfirmation issued by DHS, the Employer will provide the employee with a referral letter and instruct the employee to contact DHS through its toll-free hotline (as found on the referral letter) within 8 Federal Government work days.

5. If the employee contests a tentative nonconfirmation based upon a photo non-match, the Employer will provide the employee with a referral letter to DHS. DHS will electronically transmit the result of the referral to the Employer within 10 Federal Government work days of the referral unless it determines that more than 10 days is necessary. The Employer agrees to check the E-Verify system regularly for case updates.

6. The Employer agrees that if an employee contests a tentative nonconfirmation based upon a photo non-match, the Employer will send a copy of the employee's Form I-551 or Form I-766 to DHS for review by:

- Scanning and uploading the document, or
- Sending a photocopy of the document by an express mail account (paid for at employer expense).

7. If the Employer determines that there is a photo non-match when comparing the photocopied List B document described in Article II.C.5 with the image generated in E-Verify, the Employer must forward the employee's documentation to DHS using one of the means described in the preceding paragraph, and allow DHS to resolve the case.

E-Verify

Company ID Number: 345983

ARTICLE IV

SERVICE PROVISIONS

SSA and DHS will not charge the Employer for verification services performed under this MOU. The Employer is responsible for providing equipment needed to make inquiries. To access E-Verify, an Employer will need a personal computer with Internet access.

ARTICLE V

PARTIES

A. This MOU is effective upon the signature of all parties, and shall continue in effect for as long as the SSA and DHS conduct the E-Verify program unless modified in writing by the mutual consent of all parties, or terminated by any party upon 30 days prior written notice to the others. Any and all system enhancements to the E-Verify program by DHS or SSA, including but not limited to the E-Verify checking against additional data sources and instituting new verification procedures, will be covered under this MOU and will not cause the need for a supplemental MOU that outlines these changes. DHS agrees to train employers on all changes made to E-Verify through the use of mandatory refresher tutorials and updates to the E-Verify User Manual, the E-Verify User Manual for Federal Contractors or the E-Verify Supplemental Guide for Federal Contractors. Even without changes to E-Verify, DHS reserves the right to require employers to take mandatory refresher tutorials. An Employer that is a Federal contractor with the FAR E-Verify clause may terminate this MOU when the Federal contract that requires its participation in E-Verify is terminated or completed. In such a circumstance, the Federal contractor with the FAR E-Verify clause must provide written notice to DHS. If an Employer that is a Federal contractor with the FAR E-Verify clause fails to provide such notice, that Employer will remain a participant in the E-Verify program, will remain bound by the terms of this MOU that apply to participants that are not Federal contractors with the FAR E-Verify clause, and will be required to use the E-Verify procedures to verify the employment eligibility of all newly hired employees.

B. Notwithstanding Article V, part A of this MOU, DHS may terminate this MOU if deemed necessary because of the requirements of law or policy, or upon a determination by SSA or DHS that there has been a breach of system integrity or security by the Employer, or a failure on the part of the Employer to comply with established procedures or legal requirements. The Employer understands that if it is a Federal contractor with the FAR E-Verify clause, termination of this MOU by any party for any reason may negatively affect its performance of its contractual responsibilities.

C. Some or all SSA and DHS responsibilities under this MOU may be performed by contractor(s), and SSA and DHS may adjust verification responsibilities between each other as they may determine necessary. By separate agreement with DHS, SSA has agreed to perform its responsibilities as described in this MOU.

E-Verify

Company ID Number: 345983

D. Nothing in this MOU is intended, or should be construed, to create any right or benefit, substantive or procedural, enforceable at law by any third party against the United States, its agencies, officers, or employees, or against the Employer, its agents, officers, or employees.

E. Each party shall be solely responsible for defending any claim or action against it arising out of or related to E-Verify or this MOU, whether civil or criminal, and for any liability wherefrom, including (but not limited to) any dispute between the Employer and any other person or entity regarding the applicability of Section 403(d) of IIRIRA to any action taken or allegedly taken by the Employer.

F. The Employer understands that the fact of its participation in E-Verify is not confidential information and may be disclosed as authorized or required by law and DHS or SSA policy, including but not limited to, Congressional oversight, E-Verify publicity and media inquiries, determinations of compliance with Federal contractual requirements, and responses to inquiries under the Freedom of Information Act (FOIA).

G. The foregoing constitutes the full agreement on this subject between DHS and the Employer.

H. The individuals whose signatures appear below represent that they are authorized to enter into this MOU on behalf of the Employer and DHS respectively.

E-Verify

Company ID Number: 345983

To be accepted as a participant in E-Verify, you should only sign the Employer's Section of the signature page. If you have any questions, contact E-Verify at 888-464-4218.

Employer WIREGRASS CONSTRUCTION COMPANY,INC.	
KITTY HARDING	
Name (Please Type or Print)	Title
Electronically Signed	07/26/2010
Signature	Date
Department of Homeland Security – Verification Division	
USCIS Verification Division	
Name (Please Type or Print)	Title
Electronically Signed	07/26/2010
Signature	Date

Information Required for the E-Verify Program

Information relating to your Company:

Company Name:	WIREGRASS CONSTRUCTION COMPANY,INC.
Company Facility Address:	8974 NORTH US HWY 231
	ARITON, AL 36311
Company Alternate Address:	P.O. BOX 48
	ARITON, AL 36311
County or Parish:	DALE
Employer Identification Number:	63048367

E-Verify

Company ID Number: 345983

North American Industry Classification Systems Code:	237
Parent Company:	
Number of Employees:	100 to 499
Number of Sites Verified for:	1

Are you verifying for more than 1 site? If yes, please provide the number of sites verified for in each State:

- ALABAMA 1 site(s)

Information relating to the Program Administrator(s) for your Company on policy questions or operational problems:

Name: SANDRA B CRUIKSHANK
Telephone Number: (334) 762 - 2397 ext. 105 Fax Number: (334) 762 - 2731
E-mail Address: scruikshank@wcc-inc.com

Name: KITTY E HARDING
Telephone Number: (334) 762 - 2397 ext. 104 Fax Number: (334) 762 - 2731
E-mail Address: kharding@wcc-inc.com

ATTACHMENT "I"

STANDARDS FOR NURSERY STOCK

1. EXCEPT BY SPECIFIC AUTHORIZATION OF THE CITY, EACH TREE OBTAINED WILL HAVE:

- A tag identifying its species and the nursery that grew it
- A single stem with a full, balanced crown
- Well-formed branches, and no codominant (forked) stems
- Caliper or height as specified
- A root ball of a diameter and height appropriate to the caliper of the tree (according to American Nurserymen's Association standards), and neither broken apart nor separated from the tree's roots.

2. PLANTS MAY BE REFUSED FOR ANY OF THE FOLLOWING REASONS:

POOR VIGOR OR FORM, such as:

- A sparse or chlorotic crown
- Inadequate root development within root ball.
- Abnormally sunken places in the bark, especially below branches.
- Narrow branch angles, especially those with included bark.

DAMAGE, such as:

- Open wounds on the trunk, branches, or roots (including below the soil line)
- Cracks or bark splits surrounded by inrolled callus
- Dead, cracked, broken, or flush-cut major branches
- Separating grafts.

IMPROPER PREPARATION, such as:

- Flush-cut pruning scars, or branch-stubs left at pruning
- Evidence of topping
- Evidence of pruning done in an effort to "shape up" a derelict tree or shrub
- Improperly prepared root ball (see above).

INSECT AND/OR DISEASE PROBLEMS, such as:

- Signs (e.g., eggs) or symptoms (damage) of harmful insects.
- Signs (e.g., vegetative or sporulating bodies growing on trunk, branches, or roots) or symptoms (damage) of pathogens.

3. THE CITY RESERVES THE RIGHT:

- to select trees in the nursery,
- to reject trees or shrubs that do not meet the quality standards listed above
- to refuse trees that have been improperly prepared for transportation or improperly handled prior to delivery, and
- to make changes in species and/or size of nursery stock, as necessitated by availability or unforeseen planting site conditions.

4. ALL SHRUBS AND GROUND-COVER PLANTS must cover the tops of their containers, and all containers must actually have the capacity specified.

GUYING/STAKING:
Stabilize trees with T-posts, left in place for about 1 year. The use of 'Arborties' and 'Arborknots' should benefit the trees, and should probably be continued, barring new information to the contrary.

Unless specific plans are made for inspection of nursery stock in the nursery, the selected providers will choose the trees and shrubs for use in planting projects, so that all chosen plants meet our nursery stock standards, mentioned above.

In general, all balled-and-burlapped nursery stock should have been grown in a soil comparable to what they will be planted in at the construction site - that is, usually a predominantly clay soil, rather than a sandy soil. In general, the supplier should be from an area more northerly than Huntsville, rather than more southerly.

Trees will be inspected by the Engineering Department's construction inspector, using nursery stock standards provided by Forestry/Horticulture. With adequate notice of the time of arrival (generally 1-2 days), Forestry/Horticulture will provide a representative to assist the construction inspector.

During the time between the delivery and the planting of nursery stock, all plants will be protected as follows:

- All balled-and-burlapped plants will be heeled in, using shredded pine bark mulch, wood chips, or a comparable material.
- All plants will be watered regularly, so as to keep the mulching material moist.
- Any trees with thin bark must be protected from sunscald.
- Care must be taken to handle the plants as little as possible, to protect them from damage to trunks, branches, and root balls.

The following applies regardless of seeding method used:

BASIS OF ACCEPTANCE:
The acceptance of designated seeded areas will be based on verification of a satisfactory stand of grass and legumes in the season for each seed specie required by the mix designated for use. All seedbeds areas shall be rock free before seeding. Any settlement that causes rocks to be exposed, all rocks shall be removed before acceptance. There shall be no rocks in seeded areas over ½ inches in diameter. If a satisfactory stand of grass is not established, the area shall be re-seeded without additional cost to the Department. A satisfactory stand is defined as a cover of living plants, after true leaves are formed, of the seed species required by the mix designated for use in which 80% coverage per square foot of the selected turf type has occurred.

Mowing, weeding, edging, when directed, will not be paid for as a separate pay item. Mulch, if required, will be applied and paid for separately under Section 657. Topsoil, if required, will be applied and paid for separately under Section 649, and is to include testing and mixing of additives as required by test results, if required. Water necessary to satisfactorily prepare, and establish an early stand of grass, and maintenance of all seeding shall be classified as a part of the seeding items. The amount of water and when it shall be applied shall be the Contractor's responsibility until acceptance of the project.

CARE DURING CONSTRUCTION:
All work shall be pursued in accordance with contract erosion control requirements. The Contractor shall water, fill washes, and otherwise protect and maintain the seeded areas including any mulch or cover used until the contract is accepted or grassing is accepted. Damage by either pedestrian, vehicular traffic, or other causes shall be repaired by the Contractor. It shall be the responsibility of the Contractor to establish and maintain a satisfactory stand of grass until final acceptance of the project. Mowing of excess growth shall be performed when the height of grass is in
excess of six inches. The vegetation shall be cut to approximately four inches in height. All of the above work shall be performed regardless of seeding method used and without additional compensation.

ATTACHMENT "J'

CITY OF HUNTSVILLE
IRRIGATION SPECIFICATIONS
NON MAXICOM

GENERAL

PURPOSE

The objective of these specifications is to provide, assemble and install sprinkler system which will operate in an efficient and satisfactory manner so that the finished system shall efficiently irrigate all areas to be covered and shall prove satisfactory in all aspects to the owner. The specifications, design details, irrigation designs and quotation are to be considered a part of the sprinkler system contract, and it is expected that the chosen contractor will follow specifications with due perseverance.

SCOPE OF WORK

The work required by these specifications consists of all labor, material, equipment, and services required for a complete functioning irrigation system.

The plans and specifications are intended to include everything obviously requisite and necessary to the proper installation of the work whether each necessary item is mentioned herein or not, unless otherwise specified, and the contractor is expected to provide for the same.

All work herein specified or called for on the drawings or in the detail drawings shall be executed in accordance with all governing ordinances, laws and regulations and shall meet all local conditions and any changes and/or additions in work necessary to meet ordinances, laws, regulations and/or conditions will be made without additional expense to the owner, but such changes shall have the prior written approval of the owner.

DEFINITION OF THE INTENT OF DOCUMENTS

The contract agreement, drawings, specifications and quotation constitute the contract documents, and all modifications thereof incorporated in the documents before their execution. What is called for in one document shall be as binding as if called for by all. The intent of documents is to include, unless otherwise stated, all labor and equipment for the completion of the work required for a complete irrigation system in a workmanlike and proper manner.

EXAMINATION AND VERIFICATION OF DRAWINGS AND JOB SITE

Prior to submitting a proposal for this project, each bidder has the responsibility to examine the premises and satisfy himself as to the condition under which he will be obligated to operate in installing the irrigation system under this contract.

All plot dimensions on the irrigation design are approximate. Prior to proceeding with the work, th contractor shall carefully check and verify all dimensions and shall report all variations from those indicated i the irrigation plan to the owner in writing. If changes are to be made, they will be made in accordance wit previous provisions.

GUARANTEES

The work included under this contract shall be guaranteed by the contractor against all defects an malfunctions due to faulty workmanship for a period of one year from the date of final acceptance by the owner Upon being informed by the owner of any defects or malfunctions in workmanship, the contractor shall effec all necessary repairs and/or replacements in a reasonably expedient manner at no additional cost to the owner.

Emergency repairs, when necessary, may be made by the owner without relieving the contractor of his guarantee obligation.

The contractor shall be obligated to repair any settling of backfilled trenches which may occur during the guarantee. The contractor is also obligated to restore any and all damaged planting, paving or improvements within the year period. If the contractor does not respond to the owner's request for repair work within a period of two days, the owner may proceed with such necessary repairs and charge the contractor for all expenses incurred in the repair work.

EQUIPMENT, TOOLS, AND LABOR

The contractor shall provide and pay for all equipment, tools and labor required for the completion of this project. All irrigation meters and backflow preventers, including taps and boxes are by Huntsville Utilities; bidder shall include all fees and costs (material and labor) for same in his lump sum bid price for irrigation.

The contractor shall provide and keep up-to-date a complete set of as-built drawings which shall be corrected daily to show changes in sprinkler locations, controller location, piping locations and other deviations from the original irrigation design drawing as provided to him. All isolation valve locations shall be shown with actual measurements to reference points so they may be located easily in the field. Upon completion of the work, the contractor shall furnish the owner with a complete set of as-built drawings showing the sprinkler system as installed. This is the responsibility of the contractor and shall not be construed to be the responsibility of any other party.

TRAINING OF PERSONNEL

Upon completion of work and acceptance by the owner, the contractor shall be responsible for the training of personnel in the operation, maintenance, and repair of the system. The contractor shall furnish copies of all available parts lists, trouble shooting lists, specification sheets, and catalog sheets to the owner prior to final payment.

The contractor shall set the initial watering schedules and programming of the automatic controllers in accordance with the specifications, irrigation plan or as directed. Changes in the schedules and programming and instruction on how to make such changes shall be the responsibility of the designer or landscape architect of the system.

PROTECTION OF WORK AND PROPERTY

The contractor shall continuously maintain adequate protection of all his work from damage and sha protect the owner's property from injury or loss arising in connection with work on this contract. Th contractor shall take care to avoid damage to any existing buildings, equipment, piping, pipe covering electrical systems, sewers, sidewalks, landscaping grounds, above ground or underground installations c structures of any kind, and shall be held liable for any damage that does occur. Damage includes not onl mechanical damage but from leaks in the irrigation system being installed by the contractor, whether throug negligence or otherwise. The contractor shall adequately protect adjacent property as provided by law and shal provide and maintain all passageways, guard fences, lights and other facilities for protection required by th Public Authority for local conditions. The contractor shall securely cover all openings into the section of th system he is working on and components of the system as it is being installed to prevent obstructions in the pip and the breakage, misuse or disfigurement of the equipment.

HANDLING OF MATERIALS

The contractor shall be responsible for correct procedures in on-site loading, unloading, stacking transporting, and handling all materials to be used in the system. The contractor shall avoid rough handling which could affect the useful life of equipment. Pipe shall be handled in accordance with the manufacturer's recommendation on loading, unloading, and storage.

CLEANING PREMISES

The contractor shall continuously keep a neat and orderly area in which he is installing the system. Disposal of rubbish and waste material resulting from the installation shall be continual. There shall be NO waste materials or trash allowed in trenches.

MATERIALS

All materials are to be furnished as specified on drawings or in specifications.

SOLVENT CEMENT AND PRIMER

Solvent shall be IPS-721 or pre-approved equal.
Solvent shall be IPS-727 or pre-approved equal, **When temperatures are below 40 Fahrenheit.**

NOTE: In temperature below 32° Fahrenheit contractor shall not glue any pipe together.

Primer shall be IPS-70 or pre-approved equal.

ELECTRIC REMOTE CONTROL VALVE

100-PEB.-150-PEB.-200-PEB.

The electric remote control valve shall be a normally closed 24 VAC 50/60 cycle solenoid actuated globe pattern with a balanced pressure diaphragm design. The valve pressure rating shall not be less than 200 PSI.

The valve shall have a manual open/close control (internal bleed) for manual opening and closing of valve without electrically energizing the solenoid. The valve shall have internal manual bleed to prevent flooding of the valve box. The valve shall house a fully-encapsulated, one-piece solenoid with captured plunger. The 24 VAC 50/60 Hz solenoid shall open with 19.6 VDC minimum at 200 PSI. At 24 VAC average in rush current, it shall not exceed .41 amps. Average holding current shall not exceed .23 amps.

The valve shall have a control port filter screen to filter out grit and prevent clogging of hydraulic control parts.

The valve shall have a stainless steel flow control stem and cross handle for regulating or shutting off the flow of water. The valve must open or close in less than one minute at 200 PSI and less than 30 seconds at 20 PSI.

The valve construction shall be as such as to provide for all internal parts to be removable from the top of the valve without disturbing the valve installation.

The valve shall be as manufactured by Rain Bird Sprinkler Manufacturing Corporation, Glendora, California, or an approved equal.

ELECTRIC REMOTE CONTROL VALVE FOR DRIP
Valve for Drip shall be; XCZ-100-PRF only.

SPRINKLERS

SECTION Depending on location, area and if you are installing in a bed or in turf these are the sprinklers that need to be installed.

SPRAYS
Sprinklers to be used in beds will be **1812-SAM-PRS-45.**
Sprinklers to be installed in turf will be **1806-SAM-PRS-45.**

NOZZLES
Nozzles shall be M.P. Rotors only.

ROTORS
Sprinklers to be installed in small turf areas will be **3504-PC-SAM-PRS.**
Sprinklers to be installed in larger turf areas will be **5006-PL-PC-SAM-PRS.**

See plans for requirements or other information for this project.

RAIN GAUGE
W.R.C. Wireless Rain Sensor Combo, installed in a lock box.
If Maxicom is in use a Rain Can must be used

LOCATION WIRE

Permanently mark all of your irrigation lines with **TRACE – SAFE** water blocking tracer wire (Color Blue). Begin at the control valve and continue to the end of that line for every control valve. Also mark in the same manner beginning at the backflow vault and run in all main line trenches including any wire trenches that may be separate from the main line. **See detail sheet.**

If you have to start a new roll of wire or wire is broken, it must be repaired with a muletape wire connector (trace-safe water blocking) number T-S 19IL, T-S 19, T-S 12-19IL T-S 12-19 TS-19-LC and covered with an econo valve box or 10 inch if needed. You will also need to use them at the start of a run; main line and each lateral line. There will be no exceptions to this stipulation.

If you are irrigating a sports field you do not have to run Trace – Safe Wire on the fields.

CONTROL VALVE WIRE SPLICES

These splices will only be made by using **3M-DBY's;** all splices will either be made in a control valve box or a 6 inch econo box **only**.

SECTION INSTALLATION AND INSPECTION

INSPECTION OF WORK IN PROGRESS

The owner's authorized representative shall be responsible for inspection of the contractor's work which is in progress. A representative may bring to the attention of the contractor any work which does not meet the specifications of this contract and the contractor shall correct such work as brought to his attention.

STAKING OF SPRINKLER LOCATION

Staking of sprinkler locations shall be done by the contractor and approved by the owner's representative.

EXCAVATION

All excavation shall be unclassified and shall include all materials encountered.

It shall be the responsibility of the contractor to provide suitable backfill materials. This backfill material shall be free from the rocks, large stones and other unsuitable substances which could damage the pipe or create unusual settling problems. The minimum depth of cover over piping 6" and larger shall be 24". The minimum depth of cover over piping 4" and smaller shall be 18". Backfilling will be done in 6" layers and tamped after each layer is put in to prevent excessive settling **in all lines.**

No cutting of existing asphalt roadways shall be allowed. Contractor shall bore any required crossing of existing roadways in an approved manner.

The contractor shall exercise reasonable care to avoid causing damage to any and all underground utilities and structures.

The owner shall advise the contractor of any underground utilities or structure of which he is aware Utility locating services shall be called upon to pinpoint location of any underground utilities on site of the project by the contractor.

INSTALLATION OF SYSTEM MAIN

Installation of the system main shall be in accordance with the manufacturer's instructions and shall proceed from the point of connection of supply for the system. Concrete thrust blocks shall be installed at any directional change or tee in the pipeline in accordance with the pipeline in accordance with the pipe manufacturer's instruction.

INSTALLATION OF LATERAL LINES

Lateral lines may be installed by standard trenching techniques or by "pulling in" pipe. If the pull-in method is used, the pipe "plow shall be a vibratory type and equipped with a turf roller device to prevent tearing of the "turf". The "Mole" or "Bullet" which precedes the pipe and is used to form the opening for the pipe shall be not less than 1" larger in diameter than the outside diameter of the pipe. Starting and finishing holes shall not exceed a two foot square opening, which the sod removed from such holes is to be preserved and replaced.

Lateral pipes and fittings shall be installed in accordance with the manufacturer's recommendations, including the shaking-in of PVC pipe to prevent excessive strain when contracting in cold weather.

SPRINKLER HEADS

All sprinklers shall be installed on swing joints as shown in detailed drawings. When funny pipe is used for spray heads be sure and use a marlex ell and a barb ell as a swing joint directly below sprinkler head. The sprinkler head shall be installed so that the top is slightly below the finished grade level. If finished grade has not been established, the sprinkler will be extended a minimum of 4" above existing level and marked with a stake to prevent damage by equipment. Back fill around the swing joint and sprinkler shall be free of large rocks, roots, or foreign debris. Hand tamp around heads, so heads do not move.

When finished grade has been established the contractor shall set heads with top slightly below the finished grade level, below sod or sprigs.

NOTICE OF COMPLETION

When the contractor is satisfied that the system is operating properly, that it is balanced and adjusted, that all work and cleanup is completed, he shall issue the notice of completion to the owner's authorized representative. The notice of completion shall include the required for final inspection with date and time given.

FINAL INSPECTION WITH OWNER'S REPRESENTATIVE

The owner's representative will respond to the notice of completion by the contractor and shall appear at the given time for a tour of the project with the purpose of making it the final inspection. Any inconsistencies to the specifications shall be noted by the owner's representative and a written copy of corrections shall be given to the contractor.

SECTION ACCEPTANCE OF THE SYSTEM

The owner may accept the system even though the corrections on the final inspection have not been made by the contractor. In such a case, there will be deductions for the uncompleted or uncorrected work based on previous provisions of these specifications. Such deductions shall be made from the final payment.

SECTION AS-BUILT PLAN ACCEPTANCE

Acceptance of the system is based on the furnishing by the contractor of two sets of completed as-built plans which is acceptable to the owner or owner's representative.

TRAINING OF MAINTENANCE PERSONNEL IN OPERATION AND MAINTENANCE OF SYSTEM

The contractor's responsibility of training maintenance personnel in the operation and maintenance of the system, as outlined in a previous section of these specifications, shall not be waived due to acceptance of the system. If this responsibility is not fulfilled, the cost of obtaining this training by the owner shall be shown as deduction in the final payment.

WARRANTY AND GUARANTEE CERTIFICATES

The contractor shall furnish a certificate of warranty registration and a guarantee of work for a one year period from date of final acceptance of the system. Depending on the time of completion the contractor will need to winterize the system and start it back up in the spring. Final payment for the system shall not be made unless this certification is presented to the owner.

ADDITIONAL IRRIGATION MEASURES

GENERAL

Extent of underground irrigation system is shown on Drawings and in the schedules. Provide all labor, materials and equipment required by or inferred from Drawings and Specifications to complete the Work of the Section. Provide additional Work and materials required by local authorities at no extra cost to Owner. Contractor shall provide all permits, applications, licenses and other qualifications to complete work at no additional cost to owner.

Reference Standards: American Society for Testing and Materials, Annual Book of ASTM Standards, latest edition.
Contracts: Irrigation Work to a single firm specializing in irrigation installation, acceptable to Landscape Designer.
Codes and Standards: Perform Irrigation Work in compliance with applicable requirements of governing authorities having jurisdiction. County regulations supersede these specifications. Notify Landscape Designer in writing of all discrepancies immediately.

Do not make substitutions: If Contractor desires to make substitutions of materials; sufficient descriptive literature and material samples must be furnished to establish the material as an equal substitute. In addition, Contractor must state his reasons for desiring substitute materials. Submit this request and information to Landscape Designer.

Approval and Selection of Materials and Work: The selection of all materials and execution of all operations required under the Drawings and Specifications is subject to the approval of Owner and Landscape Designer. They have the right to reject any and all materials and any and all Work, which in their opinion does not meet requirements of the Contract Documents at any state of operations. Contractor to remove rejected Work and or materials from Project Site and replace promptly.

"As-Built" Drawings: Any changes in layout and/or arrangements of the proposed irrigation system, or any other differences between proposed system and actual installed conditions are to be recorded by Irrigation Contractor in the form of an "As-Built" Drawing. All drawings are to be clearly and neatly drawn on a Mylar sepia base of original design provided by Landscape Designer. Provide Owner and Landscape Designer with a reproducible Mylar copy of the "As-Built" Drawings before Work under this Contract will be considered for acceptance. All automatic and manual valves, hose bibs or quick couplers and wire splice shall be shown with actual dimensions to reference points so they may be located easily in the field. Submittal of approved "As-Built" Drawings will preclude any Application for Final Payment by Contractor.

Delivery, Storage and Handling: Deliver material and equipment in such a manner as to not damaged parts or decrease the useful life of equipment.

Store materials away from detrimental elements. Coordinate with General Contractor to secure a safe staging area.
Handle, load, unload, stack and transport materials for irrigation system carefully to avoid damage. Handle pipe in accordance with Manufacturer" recommendations.

Verify Tap: Test water conditions, as they exist immediately down stream from tap: If they do not meet design demands, notify Landscape Designer immediately of existing conditions.

The irrigation system is designed to operate under the following conditions; a minimum of 60 psi of water pressure at tap and at least 60# gpm available water supply from existing tap & meter. Verify working conditions by Irrigation Contractor
Job Conditions: Insurance on irrigation materials or equipment stored or installed is the responsibility of Irrigation Contractor. Such insurance shall cover fire, theft and vandalism. Should Contractor elect not to provide for such insurance, he will in no way hold Owner responsible for any losses incurred by the aforementioned acts. The Contractor is responsible for all costs incurred in replacing damaged or stolen materials.

Obtain all required permits and pay all required fees, at no additional cost to Owner. Any penalties imposed due to failure to obtain permits or pay fees are the responsibility of the Contractor.

Provide and maintain all passageways, guard fences, warning lights and other protection devices required by local authorities.

Existing site improvements shall be performed in a manner that will avoid possible damage. The Contractor is responsible for any damage of a mechanical nature as well as damage resulting from leaks in irrigation system whether due to negligence or otherwise. Keep project site clean and orderly at all times during construction.

Sleeves are to be installed by the Irrigation Contractor.

Coordination and scheduling for excavation of sleeve ends is the responsibility of the Irrigation Contractor.

Coordinate and schedule all Work with General Contractor.

Damages resulting from irrigation installation to Work of other trades must be repaired at the expense of Contractor in a timely fashion.

Make adjustments to system layout as may be required and requested to provide complete coverage at no additional cost to Owner.

Warranty: All Work for a period of one year, starting on Date of Substantial Completion, against defects in material, equipment, Workmanship and any repair required resulting from leaks or other defects of Workmanship, material or equipment.

Repair unsatisfactory conditions promptly at no cost to Owner.

Owner may make emergency repairs without relieving the Contractor of this warranty obligation.

Irrigation Contractor to repair settling of backfilled trenches occurring during warranty period, including restoration of damaged plantings, paving or improvements resulting from settling of trenches or repair operations.

Respond to Owner's request for repair Work within ten days. If not, Owner may proceed with such necessary repairs at Contractor's expense. In addition, Contractor shall be held responsible for replacement of any plant material (tree, shrubs, sod or seed) that becomes damaged or dies due to a lack of water during periods in which irrigation system is inoperable.

PRODUCTS:
Specific requirements concerning the various materials and arrangements which safe to be installed are shown on drawings.

Quality and Size: Material specified by name and/or model number in the Specifications, on the site or detailed drawings are used for the purpose of identification of materials and to insure specific use of that material in the construction of the system. No substitutions will be permitted without approval. (See Substitutions).

Plastic pipe for all main lines and laterals is Class 200 PVC Type 1120 or 1220 as manufactured Cabot, John-Mansville (or approved equal) unless otherwise specified herein or on the drawings.

PVC pipe is to be continuously marked with Manufacturer's identification, type, class and size and installed with these markings on the tope of the pipe.

All fittings should be Schedule 40 PVC Type 1, of domestic manufacture and identified as to pressure rating or schedule.
Solvent Weld: Solvent weld for PVC pipe over 20' length must be installed with standard 20' length sections. Unnecessary joints or couplings are not acceptable.

Risers: no risers will be used.

Electric Wiring: All 110 volt AC wiring to controller must consist of three wires: one black, one white and one ground. Electrical service to be provided by General Contractor unless otherwise directed by Owner.

All splices in controller wiring shall be waterproofed by using 3M DBY'S wire connectors.

All control wiring shall be 24-volt solid wire U.L. approved for direct burial in ground. Minimum wire size: 14 gauge station, 12 gauge common.

All control wiring and wiring connections from controller to valves shall be included in this contract.

Sprinkler Heads: Provide as indicated on the plan. Heads perform to Manufacturer's specifications concerning radius of throw and volume in gallons per minute at given pressure. All sprinkler heads are on swing pipe and hose bibs are to be on triple elbow swing joints.

Automatic Controller: Is to be installed in the location (shown on drawings/identified by owner's representative). The controller location will be accessible as shown on drawing for maintenance. Provide for the possibility of making minor timing adjustments to the controller in the field.

Provide controller specified on drawing; fully automatic capability as well as manual operation of the system.

Irrigation Contractor to coordinate sleeve through wall for irrigation controller (with General Contractor). If installed outside coordinate sleeve through concrete slab for irrigation controller (with General Contractor).General Contractor to provide power to controller. Coordinate with General Contractor.

Provide controller specified on drawing that operates on a minimum of 110 volts AC power input and is capable of operation of 24-volt AC electric remote control valves, with a reset circuit breaker to protect from overload. Contractor is responsible for connection to 100V AC power to controller.

Stations: Each station shall have a time setting knob that can be set for variable timing in increments from 6 to 60 minutes, or set to omit the station from irrigation cycle.

The controller, Rainbird ESP – MC-24- SS shall have a 14-day calendar dial and a 24-hour clock dial with 23 captive hour pins for programming irrigation cycle start times. A master "on-off" switch shall allow the valve power output to be interrupted without affecting the controller.

Controller Construction: The controller must be constructed so that all internal parts are accessible through controller door without disturbing cabinet installation.

Water Meter: Coordination of meter installation is the responsibility of the Irrigation Contractor. Unless installed by Utilities.
Backflow Preventer: To be installed by Irrigation Contractor. Provide Watts Double Check Assembly Backflow Preventer Model 007. The backflow preventer is a double check valve assembly type, capable of having a flow rate of 80 gpm, with a pressure loss not to exceed 5 psi and suitable for supply up to 150 psi. The backflow preventer body to be bronze, internal parts stainless steel and check valve assemblies with tight seating rubber. The backflow preventer assembly must include two gage valves for isolating unit and two ball valve test clocks for testing unit to insure proper operation. Provide backflow preventer as manufactured by Watts Sprinkler Manufacturing Corporation. Unless installed by Utilities.

Pressure Regulator: Provide Wilkins #600 or equal.

Mastervalve: Rainbird # electric remote control valve w/brass body and bonnet. Valve shall be wired to open and close with each circuit valve. Size based on mainline.

Valve Boxes: Ametek 12" rectangular valve box with cover or jumbo mechanical box with cover and Ametec 10" round valve box with cover as indicated on drawings. Place a minimum of 6" depth of gravel under each valve box, meter, and pressure regular and backflow preventer box.

Sleeves: Class 200 PVC Pipe Type 1120 or 1220: Size as indicated on Detail by Irrigation Contractor.

Hose Bibs: Hose bibs shall have an all cast brass or bronze body. Hose bibs to be ¾" inside diameter and shall be installed below grade in Ametek 12" x 18" valve boxes. The cover over hose bib boxes shall be clearly marked with "non-potable water".

Control Valves: Provide Rainbird Electric Remote Control Valve (size as indicated on Plan). Valve to conform to Manufacturer's Specifications concerning performance and at a given pressure.

Surge Protection Equipment: Provide General Electric Lightning Arrestor #GL 15 CC B 007 for controllers not equipped with primary surge protection.

Provide secondary surge protection installed on the 24V AC valve control wiring for systems controlling 24V AC solenoid operated valves.

The Irrigation Contractor is responsible for determining whether the above mentioned surge protection equipment is provided for in controller as a "built-in" unit or if it must be supplied and installed separately.

Isolation Valves: Provide all gate valves for isolation purposes allowing full diameter opening when in full open position. Manually operated valves shall be same size as mainline.

Automatic Drain Valves: Install at low point for each lateral line "Rainbird 16AP" drain valve in gravel sump 12" x 12" in size and with a minimum of 18" of cover over sump. Miscellaneous System Components: Provide risers, reducers, couplings, adapters, and fittings as necessary to complete irrigation system.

EXECUTION

Provide a competent superintendent and necessary assistants on the job while Work is progress. The Superintendent represents Contractor in all functions and directives given to him by Owner are binding as if given to Contractor in person. During the installation Landscape Designer or the owner's representative may make regular site visits and reject any Work and materials that do not meet the Standards called for in Contract Documents. Rejected work must be promptly corrected and no time extension will be allowed for this reason.

Inspection: Inspect project area prior to start of Work to determine that all site conditions are acceptable for irrigation Work to begin. Inform Landscape Designer of unsuitable conditions. Do not proceed with installation of irrigation system until unsatisfactory conditions have been corrected in a manner acceptable to installer.

Preparation: Flag all existing underground utilities prior to trenching and/or boring operations. Obtain utility locations from

Owner an/or General Contractor and Utilize utility locating services when necessary.
Excavation: All excavation is unclassified and includes all materials encountered.

Prior to excavation, remove sod, preserve and replace after backfilling is completed.

After excavation and backfilling is completed, regrade trenched area consistent with surrounding area and re-establish with 100 percent pure of type grass existing. Maintain as necessary for establishment and survival of grass.

Backfill material is to be free from rock, large stones and other unsuitable substances that could damage the pipe or create unusual settling problems. Back fill in 6" layers and tamp after each layer to prevent excessive settling.

Backfill trenches containing plastic pipe when pipe is cool to avoid excessive contraction in cold weather. Such backfilling can be done in early morning hours or pipe may be water cooled prior to backfilling procedures.

Backfill material evenly in lifts not to exceed 6" and compact to 100 percent of maximum density.

Contractor is responsible for establishing compaction in trenches equal to or exceeding overall compaction of paving base. Leave top of trench ready for asphalt by others. Minimum depth of cover of all pipe is as follows:
¾" – 1" pipe – minimum depth cover is 12"
1 ½" – 1 ½" pipe – minimum depth cover is 18".

Sleeving: Location of sleeving shown on plans is schematic. Sleeving Contractor to make adjustments necessary to accommodate existing vegetation, utilities and other existing conditions. Repair of damage to existing utilities, structures or other construction resulting from installation of sleeves is the responsibility of Sleeving Contractor. Verify those installed previous by others. Install PVC sleeves according to detail.

Pipe Joints: Follow Manufacturer's Recommendation.

Solvent weld PVC pipe, assemble according to Manufacturer's Recommendations, using appropriate PVC pipe cleaner/primer and solvent cement.

PVC to metal connection, Work metal connection first then use Teflon pipe fitting
Main line shall be installed according to Manufacturer's Recommendations.

Pipe and Fittings Installation: Install according to Manufacturer's Recommendations including snaking-in of PVC pipe to prevent excessive strain when contracting in cold weather. Solvent weld fittings must conform to Schedule 40 or Schedule 80 PVC dimensions and specifications for solvent weld fittings and as manufactured by Lasco, Inc.

Lateral lines and risers shall be as follows:
Install according to Manufacturer's Recommendations using standard techniques.
Combine lateral lines and main supply lines in common trenches wherever possible with specified minimum depth of coverage over all pipe (see Backfilling).
No risers.
Exchange of 4" pop-up to 12" high pop-in field by Landscape Designer is incidental.
Plug lines immediately upon installation to minimize infiltration of foreign matter.
Flush lateral lines and risers prior to installation of sprinkler heads.
No risers.

Sprinkler Heads: Low pop-up sprinkler heads shall be installed in such a manner that tip is 1" above finished grade. Where finish grade has not been established, extend a riser a minimum of 12" above existing grade to mark location of head. After finish grade is established, install heads at specified height on trip elbow swing joint; or flex pop when specified.

High pop-up heads: High pop-up shrub heads shall have the finished height determined by Landscape Designer.

Backfill around sprinkler head assembly in such a manner that sprinkler head is stabilized so that no lateral motion is exhibited during operation.

Height of all heads in bed areas to be determined in the field by Landscape Designer.

Install control wire in orderly fashion, locate in main line trench. Bundle wires together and tape at 10' intervals. Position wires under main line.

Allow for contraction of wires by providing looped slack at directional changes in supply line.

Keep wire splices to a minimum. All splices shall be waterproofed by using "3-M DBY'S" wire connectors. All splice locations to be indicated on "as-built drawings".
Pass Wires under existing or future paving, construction, etc. through PVC sleeves provided by Irrigation Contractor.
Control Equipment: Install automatic valves and controller according to Manufacturer's Recommendations. Appropriate locations are shown on the drawings.

Valve Boxes: All valves are to be housed in valve boxes. Install according to Manufacturer's Recommendations and according to details. Position boxes at a height that will not cause them to interfere with maintenance machinery (e.g., mowers) and such that soil and mulch do not wash into the box. Locate all valve boxes within plant bed areas wherever possible.

Install surge protection equipment on primary (110 VAC) power lines. Connect each surge protect unit to at least on 5/8" diameter by 9' long copper clad grounding electrode driven into the soil to its full depth. Place electrodes no closer than 2' from controller cabinet or any control or power wire. Be consistent in locating ground rods throughout installation with respect to controller position and not locations on "As-Built" Drawings.

Ground wire between surge protection device and grounding electrode to be single strand bare copper wire at least one size greater than wire supplying power to control unit. Route ground wire away from power and control wires where possible.

When it is necessary to pass through controller cabinet wall use two #L-70 copper grounding lugs and brass bolt as noted in detailed drawings. Use #WE 5/8" ground rod clamp (single piece and bolt) to make connection between ground rod a minimum of 10". Cover the top of rod and clamp with a Toro #850-00 cover with lid at grade level.

Balancing and Adjusting: Balance and adjust the various components of system so that overall operation of the system is most efficient. This includes synchronization of controllers, adjustment to pressure regulators, part circle sprinkler heads and individual station adjustments on controllers. The Contractor has the right to call in the Designer or Owner's Representative to aid in balancing and adjustment of system.

Operational Testing: Upon completion of irrigation system and after head installation, test entire system for proper operation. Flush all air from system and check components for proper operation.

"As-Built" Drawings: "As-Built" Drawings are to include locations of all wire splices, valves (automatic and manual) with triangulated measurements to each location as well as any deviations in location of piping and heads as represented by Contract Documents.

Owner Orientation: Upon completion of Work and final acceptance by Owner and Landscape Designer, Contractor is responsible for orientation of maintenance personnel in the operation, maintenance and repair of system. Furnish copies of all available parts lists, trouble-shooting lists and specification sheets to Owner prior to final payment.

Set initial watering schedules and programming on automatic controllers at the direction of Landscape Designer. Changes in schedules and programming and instructions on how to make such changes are under the responsibility of the Landscape Designer.

Winterizing the System: If Owner requires, irrigation piping must be winterized by first blowing system clear of water using compressed air (80 psi minimum) admitted into piping at a quick coupling valve or hose bib located at a higher elevation on the system piping. Activate individual zones; higher zones first, then proceed successively through the system towards lower elevations. Proceed through all zones twice. The air compressor used to winterize system must have an engine separate from compressor tanks to prevent high temperature air from being injected directly into PVC piping.

Clean Up: During Irrigation Work, keep project site clean and orderly. Upon completion of Work, clear grounds of debris, superfluous materials and all equipment. Remove from site to the satisfaction of Landscape Designer and Owner.
Protection: Protect Irrigation Work and materials from damage due to irrigation operations, operations by other contractors, trades and trespassers. Maintain protection until Date of Substantial Completion. Cover all openings into system as it is being installed to prevent obstructions in pipe and breakage, misuse or disfigurement of equipment.

Contractor is responsible for theft of equipment and material at job site before, during and after installation, until Date of Substantial Completion of the Work in total.

Inspection and Acceptance: Upon completion of Work, notify Landscape Designer and Owner at least three days prior to requested Date of Inspection for Substantial Completion. Prior to contacting Landscape Designer for the purpose of demonstrating all or any part of the system, thoroughly test the system for proper operation and make adjustments and replace any defective parts prior to inspection for Substantial Completion. Where inspected irrigation Work does not comply with requirements, replace rejected Work promptly, within two weeks of inspection. In unusual circumstances Owner may grant a longer time period. If such replacements are not completed within time specified, Contractor may be considered to be in default of Contract and Owner may use Contract Retainage to hire other Contractors to finish the Work.

ACCEPTANCE AND GUARANTEE

Substantial Completion: Submit written requests for inspection for Substantial Completion to Landscape Architect at least three calendar days prior to anticipated Date of Inspection and Testing. Substantial Completion cannot be granted, and at the same time no further applications for payment shall be approved for more than 85% of contract until there has first been a walk-through for head coverage. At this time the Landscape Designer and the Owner's Representative will prepare a "punch list" that consists of items to be addressed and corrected by Contractor immediately. Depending on the extent of the Work on the "punch list", the Landscape Designer and the Owner's Representative will determine whether Substantial Completion is to be granted at that time or at a later date, pending the completion of the "punch list".

Submit record drawings and maintenance manuals to Landscape Designer with written request for inspection.

Review "punch list" Work jointly with the Owners Representative and Landscape Designer for Substantial Completion of total (contract) Work.

Upon satisfactory completion of repairs and replacements and completion of "As –Built" drawings, Landscape Designer and the Owners Representative will verify system for Substantial Completion and issue AIA Certificate of Substantial Completion if all items on "punch list" have been completed. If necessary another "punch list" will be written to itemize any deficiencies still existing and will be attached to AIA Certificate. Contractor shall complete all "punch list" items if possible within 30 days while continuing maintenance.

Date of Substantial Completion: Date of Substantial Completion will constitute beginning Date of One-Year Guarantee.

This Date also constitutes the beginning of the warranty responsibilities and acceptance by Owner and Landscape Designer.

Guarantee all Work, products, equipment and materials for one year, beginning at Date of Substantial Completion as per Written Letter of Notification.

Make good any damage, loss, destruction or failure. Repairs and replacements shall be done promptly and at no additional cost to Owner.

Repair damage to grade, plants and other Work or property as necessary.

If replacement are not acceptable during or at end of Guarantee Period Owner may elect either subsequent replacement or credit. Replacement products shall have a similar one-year guarantee from time of replacement.

Guarantee applies to all unacceptable conditions or losses with exception of those due to acts of nature, vandalism or Owner neglect, as determined by Landscape Designer. Acts of Nature include, but nay not be limited to, high winds or hurricane or tornado force, sleet, hail, freezing rain and extreme cold (as determined by Landscape Designer.

Final Inspection and Acceptance: One year after the Date of Substantial Completion of Work in total, the Landscape Designer and Owner will inspect Work for Final Acceptance. Upon satisfactory completion of repairs and/or replacements Landscape Designer certifies, in writing, the Final Acceptance of Work.

At the end of Guarantee Period and upon request for inspection, jointly review all guaranteed Work for Final Acceptance. Submit written request for inspection for Final Acceptance to Landscape Designer at least two weeks prior to anticipated Date of Inspection; include list of Work Substantially Complete and list of Work replaced during Guarantee Period.

Upon completion by Contractor of all required replacements, Owner and Landscape Designer will confirm the Date of Final Acceptance of Work.

Applications for Payment will be covered in the general contract.

SUPPLEMENT TO GENERAL REQUIREMENTS

FOR

CONSTRUCTION OF PUBLIC IMPROVEMENTS

DOWNTOWN GATEWAY (HARVARD ROAD EXTENSION)-REBID

PROJECT NO. 65-11-RD03

CITY OF HUNTSVILLE, ALABAMA

SUPPLEMENT TO GENERAL REQUIREMENTS

1. GENERAL

The attention of all bidders is called to Code of Alabama §§ 34-8-1 and 34-8-2 (1975) AND 34-8-1, 34-8-2, 34-8-4, 34-8-6, 34-8-7, 34-8-8 AND 34-8-9 (AMENDED 1996) setting forth the definition of general contractor and the licensing procedures and requirements for state licensing. No one is entitled to bid and no contract may be awarded to anyone who does not possess a valid general contractor's license and the required classification for the municipal type work to be performed. The general contractor's State of Alabama license and classification must appear on the outside of the bid envelope along with the general contractor's name and address, project name and number and date and time of bid opening. Failure to provide this will be cause to reject the bid.

In determining the successful bidder, the Owner will consider in addition to the bid prices, such responsibility factors as characteristics and responsibility, skill, experience, record of integrity in business, and of performance offered and past record of performance on Owner contracts on other similar projects. Any other factors not specifically mentioned or provided for herein, in addition to that of the bid price which would affect the final cost to the Owner, will be taken into consideration in making award of contract. The right is reserved to reject any bid where investigation of the business and technical organization of the bidder available for the contemplated work, including financial resources, equipment, and experience on similar projects does not satisfy the Owner that such bidder is qualified to perform the work. The City Council of the City of Huntsville reserves the right to reject any and all bids and to waive informalities.

Separate sealed bids for the construction of this project shall be accompanied by Bid Bond in the amount of five percent (5%) of the amount of the bid not to exceed $10,000.00. Quantities are known as Attachment "A". No bidder may withdraw his bid within ninety (90) days after the actual date of opening. These specifications, the supplemental specifications, the plans, special provisions and all supplementary documents are essential parts of the contract, and a requirement occurring in one is as binding as though occurring in all. They are intended to be complementary and to describe and provide for a complete work. In case of discrepancy, calculated dimensions, unless obviously incorrect, shall govern over scaled dimensions. Supplemental Specifications shall govern over the Standard Specifications for Construction of Public Improvements Contract Projects. Plans shall govern over Standard Specifications for Construction of Public Improvements Contract Projects. Special Provisions shall govern over Standard Specifications for Construction of Public Improvements Contract Projects, Supplemental Specifications, and Plans. All bid openings and any scheduled pre-bid conferences are open to the public and will be held in the Public Services Conference Room on the 1st Floor at 320 Fountain Circle, Huntsville, Alabama, unless otherwise noted.

All references to OWNER shall mean City of Huntsville, Alabama. All references to City Engineer shall mean OWNER.

2. PROPOSAL PREPARATION

(A) Proposal Form. The bidder's proposal must be submitted on the complete original proposal form furnished him by the City. Unless otherwise provided in the proposal, joint venturers may submit a proposal for a joint venture of qualified bidders on a proposal form issued to one of them, provided each venturer has taken out a proposal and provided the proposal is signed by each co-venturer.

(B) Details. On the proposal form, the bidder shall enter in numbers a unit price and the extended amount bid (unit price x quantity) in the appropriate column for each bid item, exclusive of those items for which a fixed contract unit price and extension amount are shown. On lump sum items an entry shall be shown in the amount bid column. If a bidder wishes to bid an item free, then he shall enter 0 (zero) in both the unit price column and amount bid column. After all extensions are made, the bidder shall total the extended amounts of the bid items and show his total bid amount in the appropriate place on the proposal form. All figures shall be legibly shown in ink or typed. Any interlineation, erasure or other alteration of a figure shall be initialed by the signer of the proposal. The City will check the extension of each item given in the proposal and correct all errors and discrepancies. In case of a discrepancy between a unit bid price and the extension amount, the unit price shall govern. The sum of the extension amounts will be the contract bid price. The undersigned bidder further understands that any deletions or additions designated on the outside of the bid envelope, must indicate the particular bid item relative to the deletion or addition, even if the deletion or addition references to deduct or add to the Total Base Bid.

(C) Signing. The bidder's proposal must be signed with ink by the individual, by one or more members of the partnership, by one or more members or officers of each firm representing a joint venture, or by one or more officers of a corporation or by an agent of the Contractor legally qualified and acceptable to the City. If the proposal is made by an individual, his name and post office address must be shown; by a partnership, the name and post office address of each partnership member must be shown; as a joint venture, the name and post office address of each member or officer of the firms represented by the joint venture must be shown; by a corporation, the name of the corporation and the business address of its corporate officials must be shown. The proposal bid bond, if bid bond is tendered, shall be properly signed by the bidder and the surety.

(D) Irregular Proposals. Proposals will be considered irregular and will be rejected if they contain any omissions, alteration of form, additions not called for, incomplete bids (includes failure to enter a unit bid price on a bid item or, in the case of an alternate, the alternate being bid by the Contractor), interlineations, erasures or alterations not initialed by the person signing the proposal, or other irregularities of any kind. Bids that are not signed will be considered non-responsive and will be

rejected. No proposal will be opened that does not contain the contractor's Alabama State license number. Proposals may be rejected at any time prior to the execution of the contract. Any bidder using the same or different names for submitting more than one proposal upon any project will be disqualified from further consideration on that project.

(E) Delivery of Proposals. Each proposal for each contract shall be placed, together with the proposal guaranty, in a sealed envelope on the outside of which is written in large letters "Proposals for Work" and so marked as to indicate the project name, project number, bidder name, and State license number. Proposals will be received by the OWNER or his representative unless otherwise provided until the hour and date set in the notice to Contractors for the opening thereof. No proposal will be considered which has not been received prior to the hour and date set for the opening of bids. Proposals received after that time will be returned. No proposal will be opened that does not contain the contractor's Alabama State license number.

3. **QUANTITIES**

The undersigned bidder understands that when unit prices are called for, the quantities shown herein are approximate only and are subject to increase or decrease, and offers to do the work whether the quantities are increased, or decreased, at the unit prices stated in the proposal. Any substantial changes requiring an increase must be approved by change order prior to work and authorized by City Council Action. The undersigned bidder also understands that when lump sum bids are called for, he will be required to furnish all equipment, labor, material and other items or cost to construct a complete facility. See Attachment "A" - Bid Quantities or revised Attachment if quantities have changed after pre-bid meeting.

4. **CHANGE ORDERS**

(A) Changes in the Work

Without invalidating the agreement, the owner may, at any time or from time to time, order additions, deletions or revisions in the work; these will be authorized by change orders. Upon receipt of a change order, the contractor will proceed with the work involved. All such work shall be executed under the applicable conditions of the contract documents. A change order signed by the contractor indicates his agreement.

The OWNER may authorize minor changes or alterations in the work not involving extra cost and not inconsistent with the overall intent of the contract documents. These may be accomplished by a field order.

Additional work performed by the contractor without authorization of a change order will not entitle him to an increase in the contract price or an extension of the contract time, except in the case of an emergency.

The owner will execute appropriate change orders prepared by the engineer covering changes in the work to be performed and work performed in an emergency and any other claim of the contractor for a change in the contract time or the contract price which shall be approved by the OWNER.

It is the contractor's responsibility to notify his surety of any changes affecting the general scope of the work or change in the contract price and the amount of the applicable bonds shall be adjusted accordingly. The contractor will furnish proof of such adjustment to the owner.

(B) Change of Contract Price.

The contract price may only be changed by a change order. Any claim for additional compensation shall be based on written notice delivered to the Owner and Engineer within ten (10) days of the occurrence of the event giving rise to the claim. Notice of the extent of the claim with supporting data shall be delivered within forty-five (45) days of such occurrence unless OWNER allows an additional period of time to ascertain more accurate data. The contract price constitutes the total compensation payable to the contractor for performing the work. All duties, responsibilities and obligations assigned to or undertaken by the contractor shall be at his expense without changing the contract price. The owner may at any time without notice to the sureties, by written order designated or indicated to be a change order, make any change in the work within the general scope of the contract, including but not limited to changes: (1) in the specifications (including drawings and designs); (2) in the method or manner of performance of the work; (3) in the owner-furnished facilities, equipment, materials, services, or site; or (4) directing acceleration in the performance of the work. Any other written order or an oral order from the owner which causes any such change, shall be treated as a change order under this clause, provided that the contractor gives the owner written notice stating the date, circumstances, and source of the order and that the contractor regards the order as a change order.

(C) Change in the Contract Time.

The contract time may only be changed by a change order. Any claim for an extension in the contract time shall be based on written notice delivered to the owner and engineer within ten (10) days of the occurrence of the event giving rise to the claim. Notice of the extent of the claim with supporting data shall be delivered within forty-five (45) days of such occurrence unless OWNER allows an additional period of time to ascertain more accurate data. All claims for adjustment in the contract time shall be determined by OWNER if owner and contractor cannot otherwise agree. Any change in the contract time resulting from any such claim shall be incorporated in a change order.

The contract time will be extended in an amount equal to time lost due to delays beyond the control of contractor if he makes a claim as provided above. Such delays shall include, but not be restricted to, acts or neglect by any separate contractor employed by owner, fires, floods, labor disputes, epidemics, abnormal weather conditions, or acts of God.

All time limits stated in the contract documents are of the essence of the agreement. The provisions shall not exclude recovery for damages (including compensation for additional professional services) for delay by either party. No claim for delay shall be allowed because of failure to furnish drawings until two weeks after demand for such drawings and not then unless such claim be reasonable.

(D) Time extension for abnormal weather conditions

In order for the owner to award a time extension for abnormal weather, the following conditions must be satisfied:

1. The weather experienced at the project site during the contract period must be found to be unusually severe, that is, more severe than the adverse weather anticipated for the project location during any given month.

2. The unusually severe weather must actually cause a delay to the completion of the project. The delay must be beyond the control and without fault or negligence of the contractor.

The following table of monthly anticipated adverse weather delays is based on National Oceanic and Atmospheric Administration (NOAA) and similar data for the project location and will constitute the base line for monthly weather time evaluations. The Contractor's normal progress schedule must reflect these anticipated adverse weather delays in all weather dependent activities. The contractor's bid shall include the impact of the anticipated lost days in his quotation for the time he is to be on site.

JAN	FEB	MAR	APR	MAY	JUN	JUL	AUG	SEP	OCT	NOV	DEC
11	8	6	4	4	5	6	4	4	3	4	8

Actual adverse weather delay days must prevent work on critical activities for 50% or more of the contractor's scheduled work day before it is considered a weather delay day.

5. **MAINTAIN OFFICE**

The successful contractor shall establish an office in Huntsville, Alabama, with telephone service, and shall maintain close liaison with the OWNER.

6. **SUBCONTRACTORS**

The prime contractor shall be responsible for all work covered under the executed contract; therefore, this responsibility cannot be shifted by subcontracting the work to others. All subcontractors shall be approved by the OWNER and shall be properly licensed as required by Alabama State Law. (Code of Alabama §§ 34-8-1 and 34-8-2 (1975) AND 34-8-1, 34-8-2, 34-8-4, 34-8-6, 34-8-7, 34-8-8 AND 34-8-9 (AMENDED 1996)) A list of all subcontractors proposed for use on the project shall be provided to the OWNER at the time that bids are received. This document will be known as ATTACHMENT "C". Lien waivers will be required from all subcontractors at the time of submittal of the final payment request. Contractor shall keep the "Subcontractor's Listing" updated throughout the project duration and submit a copy of the listing with the request for final payment. Noncompliance with this request may cause delay in payment to the Contractor.

All subcontractors must be approved in writing by Owner. If the subs listed on Attachment "C' are approved by the Owner, you will be notified in your notice to proceed. Any additional subcontractors needed during the contract period shall be approved by written letter from the Owner. See Section 39 for Correction to City of Huntsville Standards Specifications for Construction.

7. **BID BOND**

Accompanying this proposal is a certified check or original signed, dated and sealed bid bond in the amount of not less than five percent (5%) of the total amount shown on the schedule of prices, not exceeding $10,000.00 dollars, payable to the City of Huntsville, Alabama, which is to be forfeited, as liquidated damages, if, in the event that his proposal is accepted, the undersigned shall fail to execute the contract and furnish a satisfactory contract bond under the conditions and within the time specified in this proposal; otherwise, said certified check or bid bond is to be returned to the undersigned.

8. **N/A**

9. LIABILITY INSURANCE (SEE ALSO ATTACHED INSURANCE FOR CONTRACTORS, WHICH IS SHOWN AS SECTION 24.)

The Contractor shall provide and maintain comprehensive general public liability insurance protecting the Contractor and the City against claims arising out of or resulting from the Contractor's operation under his contract for personal injury or property damage with minimum combined single limits of $1,000,000, whether such operations are performed by himself, or by anyone directly or indirectly employed by them. In addition, a copy of the policy may be requested upon award. Certificates of insurance acceptable to the City shall be filed with the City prior to commencement of work and said certificate shall provide that policies will not be altered or canceled until at least 30 days prior written notice has been given to the City.

The Contractor shall indemnify and hold the OWNER, its officers and employees harmless from any suits, claims, demands, damages, liabilities, costs and expenses including reasonable attorney's fees, arising out of or resulting from the performance of the work. Certificates of Insurance are required naming the City as the Certificate Holder. The Certificates should reflect the insurance coverage required herein. The Certificates are to be signed by a person authorized by the Insurer to bind coverage on its behalf and must be an original signature. Certificates signed using digital signatures will not be accepted unless accompanied by a written statement from the insurance/surety company indicating that their electronic signature is intended as their signature. The Certificates must indicate coverage will not be canceled or non-renewed except after thirty (30) days prior written notice to the City at the following address: City of Huntsville, P.O. Box 308, Huntsville, Alabama 35804, Attention: Penny Kelly.

10. LICENSES AND CLASSIFICATIONS

In order to receive the award of this contract, the Contractor/Subcontractor(s) shall be required to possess a valid general contractor's license in accordance with Code of Alabama §§34-8-2 (1975) and (1996 amended) Code of Alabama as stated in Section 1 above. This general contractor's license shall be a State of Alabama general contractor's license and shall be maintained throughout the term of this contract. A valid City of Huntsville license shall also be maintained throughout the term of this contract by the Contractor/Subcontractor(s).

The required classification for this project is stated in the Notice to Contractors also known as Attachment "E".

11. PERMITS

Additionally, the contractor shall be required to obtain and pay for all other federal, state or local permits, licenses, and fees which may be necessary or required in order to perform the work detailed herein. A City of Huntsville Contractor's License must be obtained from the City of Huntsville Inspection Department at the time signatures are obtained on contracts. A copy of City of Huntsville license shall be provided to the OWNER at the time the contract is executed. If project requires an ADEM permit, the Contractor is responsible for transferring the ADEM permit from the City of Huntsville to the Contractor upon award of bids.

12. PAYMENT

The OWNER agrees to pay the Contractor as follows: Once each month per project. The OWNER shall make partial payment to the Contractor on the basis of duly certified and approved estimates of the work performed during the preceding month by the Contractor, less five percent (5%) of the amount of such estimate, which is to be retained by the City until all of the work has been performed. Owner reserves the right to withhold payments for, but not limited to: a) defective work not remedied or defective materials not removed from site; b) claims filed, or reasonable evidence indicating imminent filing of claims against the Contractor; c) failure of the Contractor to make payments properly to subcontractors for labor, materials and equipment; d) a reasonable doubt that the Contract can be completed for the balance then unpaid; e) damage to another Contractor; f) performance of work in violation of the terms of the Contract; g) expiration of Contract time. Liquidated damages will be deducted from all invoices when the invoice estimate period end date is later than the contract completion date. All pay requests will be submitted by hard copy and on disk. The hard copy will be printed from the disk. A sample copy of the invoice is attached as Attachment "F". The OWNER will provide the disk to the contractor. Two originals and two copies of the invoices are required before payment will be made. The disk should be submitted each month, along with the originals and copies, to the Administrative Officer in the Engineering Department. No further retainage will be held after fifty percent (50%) of the contract is complete. All payments to Contractor will be made as soon as practical after the approval and finance processes have been completed. SEE SECTION 32 FOR INFORMATION ON FINAL PAYMENT.

13. N/A

14. EXAMINATION OF PLANS, SPECIFICATIONS, SPECIAL PROVISIONS, and SITE WORK

Before submitting a proposal, bidders shall examine carefully the site of the proposed work, the general and local conditions, the proposal form, standard specifications, supplemental specifications, special provisions, all addenda, and the bid bond form, and it is mutually agreed that the submission of a proposal shall be prima facie evidence that the bidder has made such examination and has judged for and satisfied himself as to the conditions to be encountered in performing the work, and to the requirements of plans, standard specifications, supplemental specifications, special provisions, contract, and bonds.
No adjustments or compensation will be allowed for losses caused by failure to comply with this requirement. Boring logs and other records of subsurface investigations may be available for inspection by bidders. Bidders shall request such records if they are not otherwise provided with bid documents. If available, it is understood that such information was obtained and is intended for the City of Huntsville's design and estimating purposes only. It is made available to bidders that they may have access to identical subsurface information available to the City, and is not intended as a substitute for personal investigation, interpretations and judgment of the bidders. Bidders are advised that the City disclaims responsibility for any opinions, conclusions, interpretations, or deductions that may be expressed or implied in any of the information presented or made available to bidders; it being expressly understood that the making of deductions, interpretations, and conclusions from all of the accessible factual information is the bidder's sole responsibility.

The Contractor shall have a continuing duty to read, carefully study and compare each of the Contract Documents, the Shop Drawings, and the Product Data and shall give written notice to the Owner of any inconsistency, ambiguity, or error omission which the Contractor may discover with respect to these documents before proceeding with the affected work. The issuance or the express or implied approval by the Owner or the Engineer of the Contract Documents, Shop Drawings, or Product Data shall not relieve the Contractor of the continuing duties imposed hereby, nor shall any such approval be evidence of the Contractor's compliance with this Contract. The Owner has requested the Engineer to only prepare documents for the Project, including drawings and specs for the project which are accurate, adequate, consistent, coordinated and sufficient for construction. HOWEVER, the OWNER MAKES NO REPRESENTATION OR WARRANTY OF ANY NATURE WHATSOEVER TO THE CONTRACTOR CONCERNING SUCH DOCUMENTS. By the execution hereof, the Contractor acknowledges and represents that it has received, reviewed, and carefully examined such documents, has found them to be complete, accurate, adequate, consistent, coordinated and sufficient for construction, and that the Contractor has not, does not, and will not, rely upon any representation or warranties by the Owner concerning such documents as no such representation or warranties have been or are hereby made.

15. INCLUSIONS TO CONTRACT

The parties further agree that the advertisement for bids, instructions to bidders, contractor's proposal, plans and specifications, general requirements, supplement to general requirements and general terms and conditions, together with any addenda thereto, made prior to submission of the contractor's proposal and all modifications agreed to by the parties and issued after the execution of this contract are a part of this contract as if fully set out herein.

16. COMMENCEMENT OF WORK

It is further understood and agreed that the Contractor shall commence work to be performed under this contract within fifteen (15) days from the date of this contract, unless otherwise instructed in writing by the OWNER. All work shall be carried on continuously to completion.

17. CONTRACT TIME

All work is to be completed within the allotted time of the original contract, which is stated in the bid proposal documents, unless a valid change order has been issued which alters the contract time period.

18. LIQUIDATED DAMAGES

It is further understood and agreed by and between the parties to this contract, that in the event the work to be performed under this contract is not completed at the expiration of the contract time, then, and in that event, the Contractor shall pay to the City the amounts per calendar day by the schedule shown in the schedule in the City of Huntsville Standard Specifications, Section 80.11 – "Schedule of Liquidated Damages" for each day thereafter until such work is completed. The City will deduct said sum or sums from any money due the Contractor under this contract for any and all invoices submitted after the contract due date. (See Section 12.). Attachment "F" – Sample of Request for Payment with Liquidated Damages shall become a part of the contract documents. Liquidated damages will be deducted from all invoices when the invoice estimate period end date is later than the contract completion date.

Section 80.11 – "Schedule of Liquidated Damages" has been amended as follows effective 2/1/11 and revised in COH specifications 3/7/11:

Original Contract Amount		Liquidated Damages Daily Charge	
More Than	To and Including	Calendar Day or Fixed Date	Work Day
$ 0	$ 100,000	$ 200	$ 400
$ 100,000	$ 500,000	$ 550	$ 1,100
$ 500,000	$ 1,000,000	$ 900	$ 1,800
$ 1,000,000	$ 2,000,000	$ 1,350	$ 2,700
$ 2,000,000	.....	$ 1,550	$ 3,100

When the contract time is on the calendar day or date basis, the schedule for calendar days shall be used. When the contract time is on a work day basis, the schedule for work days shall be used.

Amounts in accordance with ALDOT and COH specifications and is based on contract amount before Change Orders.

19. **STORAGE OF MATERIALS**

The Contractor shall not permit the storage of materials on or use of any property outside the right-of-way easement or property identified as the project site.

20. **TRAFFIC FLOW**

The Contractor shall be responsible for the uninterrupted, orderly and safe flow of traffic around, on, over or across the project site.

21. **TERMINATION FOR CONVENIENCE**

A. The City may for any reason whatever terminate performance under this Contract in whole or in part by the Contractor for convenience. The City shall give written notice of such termination to the Contractor specifying when the full or partial termination becomes effective.

B. The Contractor shall incur no further obligations in connection with the Work and the Contractor shall stop Work when such termination becomes effective. The Contractor shall also terminate outstanding orders and subcontracts and shall not purchase any additional supplies, equipment or materials for the Work, and shall make every effort to mitigate the costs of termination. The Contractor shall settle the liabilities and claims arising out of their termination of subcontracts and orders. The City may direct the Contractor to assign the contractor's right, title and interest under terminated orders or subcontracts to the City or its designee and may direct the Contractor to take steps to preserve the Work in place at the time of the termination.

C. The Contractor shall transfer title and deliver to the Owner such completed Work and materials, equipment, parts, fixtures, information and Contract rights as the Contractor has.

D. (1) The Contractor shall submit a termination claim to the City and the Consultant specifying the amounts due because of the termination for convenience together with costs, pricing or other data required by the City. If the Contractor fails to file a termination claim within six (6) months from the effective date of termination, the owner shall pay the Contractor, an amount derived in accordance with subparagraph (3) below.

(2) The City and the Contractor may agree to the compensation, if any, due to the Contractor hereunder.

(3) Absent agreement to the amount due to the Contractor, the City shall pay the Contractor the following amounts:

(a) Contract prices for labor, materials, equipment and other services accepted under this Contract.

(b) Reasonable costs incurred in preparing to perform and in performing the terminated portion of the work, and in terminating the Contractor's performance, plus a fair and reasonable allowance for overhead and profit thereon (such profit shall not include anticipated profit or consequential

damages); provided, however, that if it appears that the Contractor would not have profited or would have sustained a loss if the entire Contract would have been completed, no profit shall be allowed or included and the amount of compensation shall be reduced to reflect the anticipated rate of loss, if any. Costs incurred in performing the terminated portion of the work must have been incurred prior to the effective date of the termination.

(c) Reasonable costs of settling and paying claims arising out of the termination of subcontracts or orders pursuant to Paragraph B of this clause. These costs shall not include amounts paid in accordance with other provisions hereof.

The Total Sum to be paid the Contractor under this clause shall not exceed the total Contract Price, as properly adjusted, reduced by the amount of payments otherwise made, and shall in no event include duplication of payment.

The Owner specifically reserves the right to convert a termination for convenience into a termination for cause within one (1) year after the effective date of the termination for convenience, in the event that the Owner becomes aware of circumstances or conditions with regards to the Work that would have warranted the Owner terminating for default, had those circumstances or conditions been properly known by the Owner, at the time of the termination for convenience.
The Owner may, upon written notice to the Contractor of its intention to convert the termination for convenience to a termination for cause. initiate the termination for cause procedures at that time, as set forth in the Performance Bond, and the termination for convenience shall then be converted to a termination for cause.

22. TERMINATION FOR CAUSE

A. If the Contractor persistently or repeatedly refuses or fails to prosecute the work in a timely manner, supply enough properly skilled workers, supervisory personnel or proper equipment or material, or if it fails to make prompt payment to Subcontractors or for materials or labor, or persistently disregards laws, ordinances, rules, regulations, or orders of any public authority having jurisdiction, or otherwise is guilty of a substantial violation of a material provision of this Contract, then the Owner may, by written notice to the Contractor, without prejudice to any other right or remedy, terminate the employment of the Contractor and take possession of the site and of all materials, equipment, tools, construction equipment, and machinery thereon owned by the Contractor and may finish the Work by whatever methods it may deem expedient. In such case, the Contractor shall not be entitled or receive any further payment until the Work is finished.

B. If the unpaid balance of the Contract Price exceeds the cost of finishing the work, including compensation for the additional professional services and expenses made necessary thereby, such excess shall be paid to the Contractor. If such costs exceed the unpaid balance, the Contractor shall pay the difference to the City. This obligation for payment shall survive the termination of the Contract.

C. In the event the employment of the Contractor is terminated by the City for cause pursuant to Paragraph A and it is subsequently determined by a court of competent jurisdiction that such termination was without cause, such termination shall thereupon be deemed a Termination for Convenience and the provisions of the Termination for Convenience clause shall apply.

23. UNBALANCED BIDS

The City may reject a bid as nonresponsive if the prices bid are materially unbalanced between line items. A bid is materially unbalanced when it is based on prices which are significantly overstated or understated in relation to cost for other work, and if there is a reasonable doubt that the bid will result in the lowest overall cost to the City even though it may be the low evaluated bid.

24. ADDITIONAL INSURANCE REQUIREMENTS

The Contractor shall carry insurance of the following kinds and amounts in addition to any other forms of insurance or bonds required under the terms of the contract specifications. The Contractor shall procure and maintain for the duration of the job until final acceptance by the Owner, or as later indicated, insurance against claims for injuries to persons or damages to property which may arise from or in connection with the performance of the work hereunder by the Contractor, his agents, representatives, employees or subcontractors.

A. MINIMUM SCOPE OF INSURANCE

1. General Liability

Insurance will be written on an occurrence basis. Claims-made coverage will be accepted only on an exception basis after the Owner's approval. General Liability Coverage and Owners Contractors Protective Insurance should be written by this same insurance company.

Commercial General Liability

Products and Completed Operations
Contractual
Personal Injury
Explosion, Collapse and Underground
Broad Form Property Damage

2. Professional Liability

N/A

3. Automobile Liability

Business Automobile Liability providing coverage for all owned, hired and non-owned autos. Coverage for loading and unloading shall be provided under either automobile liability or general liability policy forms.

4. Worker's Compensation Insurance

Statutory protection against bodily injury, sickness or disease or death sustained by employee in the scope of employment. Protection shall be provided by a commercial insurance company or a recognized self-insurance fund authorized before the State of Alabama Industrial Board of Relations.

5. Employers Liability Insurance

Covering common law claims of injured employees made in lieu of or in addition to a worker's compensation claim.

B. **MINIMUM LIMITS OF INSURANCE**

1. General Liability

Commercial General Liability on an occurrence form for bodily injury and property damage:

$2,000,000	General Aggregate Limit
$2,000,000	Products - Completed Operations Aggregate
$1,000,000	Personal and Advertising Injury
$1,000,000	Each Occurrence

2. Professional Liability

N/A

3. Automobile Liability

$1,000,000 Combined Single Limit per accident for bodily injury and property damage.

4. Worker's Compensation

As required by the State of Alabama Statute.

5. Employers Liability

$100,000	Bodily Injury
$500,000	Policy Limit by Disease

C. **OTHER INSURANCE PROVISIONS**

The Owner is hereby authorized to adjust the requirements set forth in this document in the event it is determined that such adjustment is in the Owner's best interest. If the insurance requirements are not adjusted by the Owner prior to the Owner's release of specifications with regard to the project in question, then the minimum limits shall apply.

The policies are to contain, or be endorsed to contain, the following provisions:

1. General Liability and Automobile Liability Coverages Only:

a. The Owner, its officers, employees, agents and specified volunteers are to be covered as Additional Insureds, as their interest may appear, as respects: liability arising out of activities performed by or on behalf of the contractor, architect, engineer, land surveyor or consulting firm for products used by and completed operations of the Contractor, or automobiles owned, leased, hired or borrowed by the Contractor. The coverage shall contain no special limitations on the scope of protection afforded to the Owner, its officers, employees, agents or specified volunteers.

b. The Contractor's insurance coverage shall be primary insurance as respects the Owner, its officers, employees, agents, and specified volunteers, as their interest may appear. Any insurance or self-insurance maintained by the Owner, its officers, officials, employees, agents or specified volunteers shall be excess of the Contractor's insurance and shall not contribute to it.

c. The Contractor's insurance shall apply separately to each insured against whom claim is made or suit is brought, except with respect to the limits of the insurer's liability.

2. All Coverages

a. The Contractor is responsible to pay all deductibles. Each insurance policy required by this clause shall be endorsed to state that coverage shall not be suspended, voided, canceled by either party, reduced in coverage or in limits except after thirty (30) days prior written notice by certified mail, return receipt requested, has been given to the Owner. Cancellation of coverage for non-payment of premium will require ten (10) day's written notice to the Owner.

b. Any failure to comply with reporting provisions of the policies shall not affect coverage provided to the Owner, its officers, employees, agents or specified volunteers.

D. **ACCEPTABILITY OF INSURERS**

Insurance is to be placed with insurers with an A. M. Best's rating of no less than B + V.

E. **VERIFICATION OF COVERAGE**

The Owner shall be indicated as a Certificate Holder and the Contractor shall furnish the Owner with Certificates of Insurance reflecting the coverage required by this document. The A.M. Best Rating and deductibles, if applicable, shall be indicated on the Certificate of Insurance for each insurance policy. The certificates for each insurance policy are to be signed by a person authorized by that insurer to bind coverage on its behalf. All certificates are to be received and approved by the Owner before work commences. The Owner reserves the right to require complete, certified copies of all required insurance policies at any time. Certificates signed using digital signatures will not be accepted unless accompanied by a written statement from the insurance/surety company indicating that their electronic signature is intended as their signature.

F. **SUBCONTRACTOR WORKING FOR GENERAL CONTRACTOR, OR ARCHITECT, ENGINEERS, LAND SURVEYORS OR CONSULTING FIRMS WORKING FOR THE ENGINEER OF RECORD**

The Contractor shall include all subcontractors as insured under its policies or shall furnish separate certificates and/or endorsements for each subcontractor. The Engineer of Record shall include all architects, engineers, land surveyors or consulting firms as insured under its policies other than professional liability, or shall furnish separate certificates and/or endorsements for each architect, engineer, land surveyor or consulting firm. Subcontractors working for the contractor or architects, engineers, land surveyors, or consulting firms working for the Engineer or Record shall be required to carry insurance.

G. **HOLD HARMLESS AGREEMENT**

1. Other Than Professional Liability Exposures

The Contractor, architect, engineer, land surveyor or consulting firm, to the fullest extent permitted by law, shall indemnify and hold harmless the City of Huntsville, its elected and appointed officials, employees, agents and specified volunteers against all claims, damages, losses and expenses, including, but not limited to, attorney's fees, arising out of or resulting from the performance of the work, provided that any such claim, damage, loss or expense (1) is attributable to personal injury, including bodily injury, sickness, disease or death, or to injury to or destruction of tangible property, including loss of use resulting therefrom and (2) is caused by any negligent act or omission of the contractor, architect, engineer, land surveyor or consulting firm, or any of their subcontractors, subconsultants, or anyone directly or indirectly employed by any of them or anyone for whose acts they are legally liable. Such obligation should not be construed to negate, abridge, or otherwise reduce any other right or obligation of indemnity which would otherwise exist as to any party or person described in this paragraph.

2. The architect, engineer, land surveyor or consulting firm agrees that as respects to negligent acts, errors, or omissions in the performance of professional services, to indemnify and hold harmless the City of Huntsville, its officers, agents, employees, and specified volunteers from and against any and all claims, demands, losses and expenses including,

but not limited to attorney's fees, liability, or consequential damages of any kind or nature resulting from any such negligent acts, errors, or omissions of the architect, engineer, land surveyor or consulting firm or any of their subconsultants, or anyone directly or indirectly employed by any of them or anyone for whose acts they are legally liable.

25. **DOMESTIC PREFERENCES**

In the performance of this contract, the contractor shall comply with Ala Code (1975) §§ 39-3-1 through 39-3-5 in supplying steel, materials, supplies, other products, and labor. Failure to comply with these requirements shall subject the contractor to the penalties set forth in the sections of the Alabama Code set forth above.

26. **TIME IS OF THE ESSENCE**

Time is of the essence in the performance of this contract.

27. **NO DAMAGES FOR DELAYS**

In the event that the Contractor is delayed in the performance of the work for the reasons set forth in §80.09 of the City of Huntsville's Standard Specifications for the Construction of Public Improvements, Contract Projects, 1991, then the Contractor's recovery for such delay shall be limited to the extensions of time in contract performance in accordance with the provisions of §80.09 and in §4(c) "Changes in Contract Time" as set forth in the Request for Bids.

In such circumstances, time extensions are the sole remedy provided to the Contractor. The Contractor shall make no claim for extra compensation due to delays of the project beyond his control. Such delays may include those caused by an act of neglect on the part of the owner or the engineer, or by an employee of either, or by any separate contractor employed by the Owner, or by any changes ordered in the work, or by labor disputes, fire, unusual delays in transportation, adverse weather condition not reasonably anticipatable, unavoidable casualties, or by delay specifically authorized by the Owner in writing pending the resolution of any disputes, or by any other cause which the Owner determines may justify delay.

28. **CONTRACTOR RESPONSIBLE FOR LOCATING UTILITIES PRIOR TO CONSTRUCTION INITIATION**

The Contractor's attention is specifically directed to §50.07 -Cooperation with Utilities and Non-Highway Public Facilities of the City of Huntsville's Standard Specifications for the Construction of Public Improvements, Contract Projects, 1991. In addition to the responsibilities placed on the Contractor by that clause, the Contractor shall be responsible for having existing utilities located prior to excavations. The existence and location of any underground utility pipes or structures shown on these drawings have been obtained by a search of the available records. The City assumes no responsibility as to completeness or accuracy of the depicted location on these drawings. The Contractor shall be responsible for taking precautionary measures to protect the utility lines shown and all other lines not of record or not shown on these drawings by verification of their location in the field prior to the initiation of the work.

29. **CORRECTION TO CITY OF HUNTSVILLE'S STANDARD SPECIFICATIONS FOR THE CONSTRUCTION OF PUBLIC IMPROVEMENTS, CONTRACT PROJECTS, 1991**

§80.09 (b) 2.of the City of Huntsville's Standard Specifications for the Construction of Public Improvements, Contract Projects, 1991 refers to the definition of recovery time as being set forth in Section 10.01. Inasmuch as this definition was omitted from §10.01, the following definition shall be incorporated:

Recovery Time. Recovery time is defined as the time required, after the controlling item or items of work have been substantially damaged as a result of conditions and causes beyond the control of the Contractor and not due to his negligence of fault, to restore the work to the condition existing prior to such damage so that normal operations can be resumed on the contract pay items. Recovery time shall be the number of days required by the Contractor, working with normal forces, to restore the work as described above.

30. **WARRANTIES**

Contractor shall provide a minimum of one year warranty of all materials and services from date of final completion. Additionally, all manufacturer's warranties on materials used in providing the services shall be provided to the owner with the final payment request. Separate warranty bonds may be required on specialty items as determined by the Owner and will be shown as a separate line item in the quantities prior to bidding.

31. **COORDINATION WITH OTHER CONTRACTORS**

It shall be the responsibility of the contractor to coordinate with other separate contractors who may be working on the site or an adjacent site with regards to access to the site, storage of materials and working on a non-interference basis.

32. W-9 TAXPAYER FORM

All vendors/contractors are required to submit a Federal Tax Form W-9 to City of Huntsville at the time a contract is awarded, unless vendor/contractor is already registered and doing business with the City. No payments of invoices can be made until this W-9 Tax Form has been properly submitted. A copy of the W-9 Tax Form can be obtained at the following website: www.irs.ustreas.gov/pub/irs-pdf/fw9.pdf

33. FINAL PAYMENT

Final payment to construction contractor will be made after contractor provides the following: advertising of completion for four (4) consecutive weeks, lien waivers have been provided from all subcontractors, Record Drawings (As-Builts) have been submitted to the OWNER by construction contractor, all property pins have been reset by a licensed land surveyor hired by the construction contractor to meet "Standards of Practice for Surveying in the State of Alabama" as required by the Alabama Board of Registration for Engineering and Land Surveyors, and all construction signs have been removed. This final payment will be retainage only. All work shall be complete prior to advertisement of completion. Advertisement of completion shall be in a Huntsville local newspaper. The final payment request of retainage only shall be submitted along with two (2) original, certified copies (with raised notary seal) of the advertisement of completion, warranties, lien waivers and Record Drawings. The advertisement of completion must read as follows:

LEGAL NOTICE (Header)

___(company name)___ hereby gives Legal Notice of Completion of Contract with ___(project name)___, ___(project no.(s)___located in the City of Huntsville, Alabama. All claims should be filed at ___(company address)___during this period of advertisement, i.e. June 17, 24, July 1, 8, 2011 (example of dates).

34. PROJECT COMPLETION DATE

The project completion date will be a date mutually agreed upon by the OWNER and Contractor. This date will be after all items have been completed. Therefore, all work will be complete before any advertisement of completion is made. The completion date will always be before the first advertisement date. This final project completion date will be the date used to determine the one year warranty for all work and materials, unless a separate warranty bond has been called for as a line item prior to bidding.

35. RECORD DRAWINGS

POLICY FOR RECORD DRAWINGS

The purpose of this policy is to document procedures for the preparation and delivery of Record Drawings. Record Drawings shall include all changes in the plans, including those issued as Change Orders, Plan Clarification, Addenda, Notice to Bidders, responses to Requests for Information, Jobsite Memos, and any additional details needed for the construction of the project, but not shown on the plans. After completion of all construction and before final acceptance is made, the Contractor shall submit one set of full size record drawings with dimensioned changes shown in red pencil, and one digital copy of record drawings using the criteria listed below.

City Construction Projects:
The Contractor shall be responsible for field surveying upon substantial completion of construction (to be performed by a registered land surveyor in Alabama). Contractor is responsible for providing digital record drawings showing all info specified below, as applicable. Record drawings shall be maintained by the Contractor at the work site and shall be updated based on job progress to reflect all changes. Record drawings shall be made available for review on a monthly basis at the job site. A monthly review of record drawings will be part of the monthly monetary progress review. Progress payments may be withheld if the Record Drawings are not kept up-to-date. A late review could result in a delay of payment.

Format Requirements for all record drawing submittals:
All drawings shall be prepared in Micro Station .DGN format, unless otherwise approved by the City Engineer. Transmittal letters shall consist of a list of files being submitted, a description of the data in each file, and a level/layer schematic of each design file. DGN design files should have working units as follows: master units in feet, no sub-units, and 1,000 positional units. All data submitted shall use NAD 1983 Alabama East Zone coordinates as described in The Code of Alabama (1975), section 35-2-1 and NGVD 1929. Digital files shall be submitted on 4-3/4" CD-RW (preferably in a live/flash drive format) ROM, 100 MB zip drive, 3 and ½ inch floppy disk, or to the City of Huntsville F.T. P. Site. Contractor is required to certify that record drawings are in the correct format upon submittal. Record Drawings shall be prepared and provided to the OWNER in the

manner required and described below in Level Symbology.

Record Drawing Criteria, unless otherwise noted by City Engineer:

1. **Roadways:**
   a. Any changes during construction of roadway/intersections that differ from plan drawings.

2. **Sanitary Sewers:**
   a. Gravity Line
      i. Horizontal Location of Manholes – Northing and easting Coordinates
      ii. Vertical Location of Manholes – Lid elevation and Invert elevation.
      iii. Changes in location of clean outs, or end of service lateral.
      iv. Changes in length, slope, size, or material of lines.
   b. Force Mains
      i. Horizontal Location of Air Relief/Vacuum/Isolation Valves – Northing and easting Coordinates
      ii. Horizontal and Vertical Location of Fittings/Bends
      iii. Changes in length, size, depth or material of lines
      iv. Changes in restraint types
   c. Pump Stations
      i. Changes in Structural Requirements – (length, width, thickness, cover, laps, bar size, spacing, materials, material strengths, etc.)
      ii. Changes in Site Development and/or Landscaping
      iii. Changes in Equipment

3. **Storm Drainage:**
   a. Structures (boxes, inlets, end treatments, etc.):
      i. Horizontal locations of Features – Northing and easting coordinates
      ii. Vertical location of Features – Tops and Inverts
      iii. Changes in type, size, or material of feature.
   b. Pipes / Culverts:
      i. Document length
      ii. Document slope
      iii. Document size
      iv. Document invert elevation
      v. Changes in material of structure
   c. Flumes, Ditches, and/or Swales/Berms: (the following are minimum requirements).
      i. Horizontal location (to verify location within described easements)

For easement widths less than 15- feet	At 100-foot intervals along the centerline of feature.
For easement widths 15-feet or Greater	At 200-foot intervals along the centerline of feature.

      ii. Vertical location (to verify positive drainage)

For slopes less than 0.5%	At 50-foot intervals along the centerline of feature.
For slopes 0.5% or greater	At 100-foot intervals along the centerline of feature.

      iii. Changes in width or material of feature.
      iv. Changes in location and type of geotechnical fabric used.
      v. Changes in overall grading of site topography.

   d. Detention / Retention Facility:
      i. Changes in size, location, or material of facility.
      ii. Changes in location and type of geotechnical fabric used.
      iii. Where applicable, copy of maintenance agreement.

Checklist for review of record drawings:

a. Changes in sidewalk location or size.
b. Changes in shoulder widths.
c. Changes in grades at intersections. (also to include changes in island location)
d. Changes in location of driveway aprons.
e. Changes in pavement section, to be supported by adequate documentation.
f. Changes in gutter flow line elevation. (could be substituted in 3b) versus edge of pavement).

g. Geotechnical fabric locations, to include vertical elevation.
h. Changes in Traffic Engineering related items such as signals, signage and markings, etc.

Any other changes that may have occurred during construction.

LEVEL SYMBOLOGY

DESIGN LEVEL	CONTENTS	LINE CODE	COLOR	WEIGHT	TEXT SIZE	FONT	CELL NAME
1	State Plane Coordinate Grid	0	0	0	20	0	
2	Benchmarks	0	0	0			
3	Street Text	0	3	0	20	0	
4	Street R/W	7	0	0			
5	Street Centerline	7	0	0			
6	Street Pavement	0	3	0			
6	Proposed Street Pavement	3	16	0			
7	Parking Lots	1	3	1			
8	Secondary Roads	2	3	0			
8	Trails	3	3	0			
9	Secondary Roads/Trails Text	0	3	0	20	0	
10	Sidewalks	5	3	0			
11	Bridges/Culverts	0	0	0			
12	Hydrology - Major	6	1	0			
12	Hydrology - Minor, Ditches	7	1	0			
13	Hydrology - Text	0	1	0	25	23	
14	Tailings & Quarries, Athletic Fields/Text, misc. areas	0	1	0			
15	City Limits/County Line	1	0	3			
16	City /limit text	0	0	1	30	0	
17	Railroad Tracks (Patterned)	0	2	0			RR
18	Railroad Text	0	2	0	25	0	
19	Railroad R/W	2	2	0			
20	Utility Poles (Cell)	0	5	0			P POLE
21	Utility Easements	3	5	0			
22	Utility Text	0	5	1			
23	Geographic Names	0	3	1			
24	Building Structures	0	0	0			
	Pools and Text	0	1	0	10	1	
24	Future Site of Structures	2	0	0			STRUCT
	Existing Structures (exact location and shape unknown)	2	0	0			STRCEX
25	Property Lines	6	6	1			
26	Cadastral Polygons	6	6	0			
27	Ownership Text	0	6	1			
28	Cemeteries/Text	4	6	0	10	1	
29	Lot Numbers				25	0	
30	Block Numbers				30	0	
31	Addition Names	0	0	0	35	0	
32	Open						
33	Lot Ticks						
34	Lot Lines/Property Lines	6	6	0			
35	Trees/Hedge Rows	0	6	0	AS=1		TREES
36	GPS Monuments	0	5	0	15	0	GPS
37	2' Topo Contour						

38	5' Topo Contour	0	7	0			
39	25' Major Topo Contour	0	7	0			
40	X Spot Elevation	0	7	0			
41	FEMA Monuments/Labels	0	3/0	0	18	1	GPSPNT
42	Quarter Sections						
43	Section Lines	0	5	0			
44	Features	0	2	0			
44	Cell Towers	0	12	0	AS=1		CELTWR
45	Fences (Pattern)	0	8	0	AS=1		FENCE
46	Format/Legend	0	0	0			Limleg Madleg
47	Mass Points	0	7	2			
48	Break Lines	0	7	2			
49	Open						
50	Signs						
51	Open						
52	Open						
53	Open						
54	Open						
55	Open						
56	Property Address	0	1	0			
57	Text Tag for Buildings	0	1	0	10-20	1	
58	Open						
59	Open						
60	Open						
61	Open						
62	Monuments for Setup (point cell)						
63	Open						

36. **LIEN WAIVERS**

Lien waivers will be required from all subcontractors working for the contractor. These lien waivers shall be included with your final payment package. The contractor is responsible for obtaining signatures from his subcontractors. If no subcontractors are used, contractor must provide a statement indicating such.

37. **LOWEST RESPONSIBLE BIDDER**

For the purpose of determining the lowest responsible bidder, the OWNER shall consider the base bid amount together with any options set forth in the Request for Bids. In the event that the City does not have sufficient funds to award both the base bid and all options, then the City reserves the right to determine the lowest responsible bidder on the base bid only or the base bid and the number of options affordable considering the funds available to the City for the procurement. This method for determining the low bidder is for the purpose of allowing the City to procure the most advantageous bid for the OWNER. City of Huntsville reserves the right to award any and/or all options at any time during the life of the contract.

38. **NON-RESIDENT BIDDERS**

"In awarding the Contract, preference will be given to Alabama resident contractors and a nonresident bidder domiciled in a state having laws granting preference to local contractors shall be awarded the Contract only on the same basis as the nonresident bidder's state awards contracts to Alabama contractors bidding under similar circumstances."

39. **CORRECTION TO SECTION 80.08(C) of The City of Huntsville "STANDARD SPECIFICATIONS FOR CONSTRUCTION OF PUBLIC IMPROVEMENTS"** is revised as shown:

(C) DAYS WORK NOT PERMITTED: The Contractor shall not permit work on any pay item to be done on Sundays and the following holidays: New Year's Day, Martin Luther King's Birthday as nationally observed, Memorial Day, Independence Day, Labor Day, Veterans Day, Thanksgiving Day and Christmas Day, except with permission of the Director.

40. **CORRECTION TO SECTION 80 – of The City of Huntsville "STANDARD SPECIFICATIONS FOR CONSTRUCTION OF PUBLIC IMPROVEMENTS" - PROSECUTION AND PROGRESS 80.01 Subletting and Contract. (a) LIMITATIONS**

The Contractor shall not sublet the contract or any portion thereof, or of his right, title, or interest therein, without written consent of the DIRECTOR. If such consent is given, the Contractor will be permitted to sublet a portion of the work, but shall perform with his own organization, work amounting to not less than 30 percent of the total contract cost. Any items designated in the contract as "specialty items" may be performed by sub-contract and the cost of such specialty items performed by sub-contract may be deducted from the total cost before computing the amount of work required to be performed by the contractor with his own organization. No sub-contracts, or transfer of contract, shall relieve the Contractor of his liability under the contract and bonds. The Department reserves the right to disapprove a request for permission to sublet when the proposed Subcontractor has been disqualified from bidding for those reasons listed in Subarticle 20.02(b) and Article 30.03.

41. **CORRECTION TO SECTION 80 – of The City of Huntsville "STANDARD SPECIFICATIONS FOR CONSTRUCTION OF PUBLIC IMPROVEMENTS" - PROSECUTION AND PROGRESS 80.03 Progress Schedule of Operations**

A critical path schedule is required within thirty (30) days after award. The critical path schedule must be submitted in Microsoft Projects format (electronic format and hard copy), with the critical path highlighted. The critical path schedule shall show information on the task or tasks that must be finished on schedule for the project to finish on schedule. Task dependencies, constraints, and relationships shall be shown on the schedule. If the progress report (critical path) is not received, YOUR first pay estimate will NOT BE PROCESSED UNTIL IT IS RECEIVED). See section 80.03 and 80.04 for additional requirements.

42. **CORRECTION TO SECTION 80 – of The City of Huntsville "STANDARD SPECIFICATIONS FOR CONSTRUCTION OF PUBLIC IMPROVEMENTS" PROSECUTION AND PROGRESS 80.09 (b) Contracts on a Calendar Day or Calendar Date Basis**

§80.09 (b) – Change 10 calendar days to 15 calendar days at each occurrence within section 80.09(b).

Section 80.09(B) is revised to remove the last sentence of the first paragraph: ("Also where the total cost of the completed work exceeds the total cost shown on the proposal, an extension in calendar days will be granted the Contractor, as provided in Section 80.09(a)1.") It is replaced by: "Where the scope of work is increased, an extension of time commensurate with the scope of the change may be granted by the OWNER, when in his judgment, the facts justify an extension. The contractor shall provide justification substantiated to the satisfaction of the OWNER with any requests for time extensions. Justification shall include, but not be limited to, a revised schedule showing the impact to critical path tasks. "

43. **CORRECTION TO SECTION 105 – of The City of Huntsville "STANDARD SPECIFICATIONS FOR CONSTRUCTION OF PUBLIC IMPROVEMENTS" - EXCAVATION AND EMBANKMENT 105.04 (a) Method of Measurement**

Section 105.04 will remain as stated when estimated borrow material is less than 2500 C.Y.

When estimated borrow material is more than 2500 C.Y., Section 105.04 is revised to remove the last paragraph: "Borrow material will be measured at the point of delivery, inside the delivery truck less 30 percent for shrinkage."

44. **CORRECTION TO SECTION 847 – of The City of Huntsville "STANDARD SPECIFICATIONS FOR CONSTRUCTION OF PUBLIC IMPROVEMENTS" - PIPE CULVERT JOINT SEALERS**

Section 847 is deleted and replaced with Section 846 – Pipe Culvert Joint Sealers, ALDOT Specifications for Highway Construction, Current Edition.

45. **NPDES CONSTRUCTION REQUIREMENTS**

For areas of this project meeting the Alabama Department Of Environmental Management (ADEM) definition of a "Construction Site", the Contractor shall prepare and apply for, pay the necessary fees, post the required registration at the jobsite prior to commencing work, and maintain the worksite and records in accordance with the ADEM requirements for National Pollutant Discharge Elimination System (NPDES) registration. Offsite borrow pits utilized in the construction of this project are included in the requirement. NPDES Construction Site is construction that disturbs one (1) acre or greater or will disturb less than one (1) acre but is part of a larger common plan of development or sale whose total land disturbing activities total one (1) acre or greater. An NPDES construction site also includes construction sites, irrespective of size, whose stormwater discharges have a reasonable potential to be a significant contributor of pollutants to a water of the State, or whose stormwater discharges have a reasonable potential to cause or contribute to a violation of an applicable Alabama water quality standard as determined by the Department. The Contractor is referred to the "Alabama Department Of Environmental Management Field Operations Division – Water Quality Program - Division 335 – 6" for complete definitions and requirements. The Contractor is also referred to Item 11 of these General Requirements, sections 50.15, 50.16, and 70.02 of the City of Huntsville Standard Specifications For Construction Of Public Improvements, Contract Projects (Specifications).

Contractor violations of the permit by rule which results in enforcement actions from ADEM including fines and/or work stoppage shall be the responsibility of the Contractor. Fines assessed to the Contractor or the OWNER because of Contractor

action shall be paid by the Contractor. No extension of contract time shall be considered as a result of enforcement. Enforcement history will also be considered by the OWNER in its decision to issue future proposals or award future contracts in accordance with disqualification provisions of Section 20.02(b) of the Specifications.

46. **DELETION OF SECTION 50.01 – Authority of the Engineer of Record**
This section is deleted.

47. **SHOP DRAWINGS**
The approval of shop drawings by the Engineer will cover only the features of the design and in no case shall this approval be considered to cover error or omissions in shop details or a check of any dimensions. The Contractor shall be responsible for the accuracy of the shop drawings, the fabrication of materials and the fit of all connections; and he shall bear the cost of all extra work in erection caused by errors in shop drawings or in fabrication, inaccurate workmanship, misfits of connections or for any changes in fabrication necessary. No work shall be done on the material before the shop drawings have been approved. Any material that the Contractor orders prior to the approval shall be at the Contractor's risk.

Substitutions or changes whether indicated or implied on shop drawings will not be considered as changes regardless of the Engineer's approval of shop drawings unless the change has been previously submitted and approved as a change order per the requirements for changes in the contract.

After a shop drawing has been approved, no changes shall be made unless directed in writing to the Owner and acceptance by the Owner of said changes. Any acceptance of change by the Owner does not constitute a change to the contract unless that change has been approved and directed in writing per change order. Compensation for preparing and furnishing all shop and working drawings shall be included in the contract unit prices for the various pay items of work.

48. **E-VERIFY – NOTICE**

The Beason-Hammon Alabama Taxpayer and Citizen Protection Act, Act No. 2011-535, Code of Alabama (1975) § 31-13-1 through 31-13-30 (also known as and hereinafter referred to as " the Alabama Immigration Act") as amended by Act No. 2012-491 on May 16, 2012 is applicable to all competitively bid contracts with the City of Huntsville. As a condition for the award of a contract and as a term and condition of the contract with the City of Huntsville, in accordance with § 31-13-9 (a) of the Alabama Immigration Act, as amended, any business entity or employer that employs one or more employees shall not knowingly employ, hire for employment, or continue to employ an unauthorized alien within the State of Alabama.
During the performance of the contract, such business entity or employer shall participate in the E-Verify program and shall verify every employee that is required to be verified according to the applicable federal rules and regulations. The business entity or employer shall assure that these requirements are included in each subcontract in accordance with §31-13-9(c). Failure to comply with these requirements may result in breach of contract, termination of the contract or subcontract, and possibly suspension or revocation of business licenses and permits in accordance with §31-13-9 (e) (1) & (2).

Code of Alabama (1975) § 31-13-9 (k) requires that the following clause be included in all City of Huntsville contracts that have been competitively bid and is hereby made a part of this contract:

"By signing this contract the contracting parties affirm, for the duration of the agreement, that they will not violate federal immigration law or knowingly employ, hire for employment, or continue to employ an unauthorized alien within the State of Alabama. Furthermore, a contracting party found to be in violation of this provision shall be deemed in breach of the agreement and shall be responsible for all damages resulting therefrom."

Contractor's E-Verify Memorandum of Understanding shall be a part of the contract bid documents and shall be submitted with the bid package.

49. **CITY OF HUNTSVILLE'S TRAFFIC ENGINEERING DEPARTMENT CONSTRUCTION REQUIREMENTS**
For areas of this project that require removal of traffic loops, striping, markings, rpm's and ceramic markers, the following shall apply:

1. **TRAFFIC SIGNAL LOOP REPAIRS** – All vehicular and bicycle detector loop replacements shall be in accordance with the Alabama Department of Transportation Standard Specifications for Highway Construction, Current Edition. Unless otherwise specified, traffic signal loops shall be replaced exactly as existed prior to any paving or resurfacing work. The general contractor will be responsible for documenting location of loops, location of any associated items for loop operation and assuring that loops are replaced exactly as existed prior to paving. All vehicular and bicycle loop repairs shall be replaced within fourteen (14) calendar days after paving work.

2. **TRAFFIC SIGNAL STRIPING, MARKINGS, RAISED PAVEMENT MARKERS AND CERAMIC MARKERS FOR GUIDANCE** - All traffic striping, markings, raised pavement markers and ceramic markers for guidance shall be in

accordance with the Alabama Department of Transportation Standard Specifications for Highway Construction, Current Edition. Unless otherwise specified, traffic striping, markings, raised pavement markers and ceramic markers for guidance shall be replaced exactly as traffic striping, markings, raised pavement markers and ceramic markers for guidance existed prior to any paving or resurfacing work. The general contractor will be responsible for documenting location of all striping, markings, raised pavement markers and ceramic markers for guidance and assuring that all are replaced exactly as existed prior to paving. All traffic striping, markings, raised pavement markers and ceramic markers for guidance shall be reflectorized. All resurfaced areas shall be marked with temporary striping and markings for traffic usage by nightfall each day, 7 days a week, in accordance with State of Alabama regulations. All permanent striping, markings, raised pavement markers and ceramic markers for guidance shall be replaced within thirty (30) calendar days after paving work.

50. SURVIVABILITY OF CONTRACT PROVISIONS

Termination of this Contract by either party shall not affect the rights and obligations of the parties that accrued prior to the effective date of the termination. Terms and conditions of the contract that survive termination include, but are not necessarily limited to, provisions regarding payments, insurance, termination, warranty, governing law of the contract, liquidated damages, bonding requirements, notice procedures, waiver, and other requirements necessary and appropriate for the proper resolution of disputes, claims, and enforcement of the rights of the parties.

51. SURETY BONDS

The Contractor shall furnish separate performance and payment bonds to the Owner within fifteen (15) days after the date of acceptance of this proposal by City Council action. Each bond shall set forth a penal sum in an amount not less than the Contract Price. Each bond furnished by the Contractor shall incorporate by reference the terms of this Contract as fully as though they were set forth verbatim in such bonds. In the event the Contract Price is adjusted by Change Order executed by the Contractor, the penal sum of both the performance bond and the payment bond shall be deemed increased by like amount. The performance and payment bonds furnished by the Contractor shall be in forms suitable to the Owner, in conformance with all the requirements of the Code of Alabama (1975), §39, and shall be executed by a surety, or sureties, reasonably suitable to the Owner. All bonds must be approved by the Mayor and the Clerk-Treasurer of the City of Huntsville.

52. GOVERNING LAW

The Contract shall be governed by the laws of the State of Alabama.

53. ALABAMA IMMIGRATION ACT (Beason-Hammon Alabama Taxpayer and Citizen Protection Act, Act No. 2011-535, Code of Alabama (1975)

Compliance with the requirements of the (Beason-Hammon Alabama Taxpayer and Citizen Protection Act, Act No. 2011-535, Code of Alabama (1975) § 31-13-1 through 31-13-30, as amended by Alabama Act 2012-241, commonly referred to as the Alabama Immigration Law, is required for City of Huntsville, Alabama contracts that are competitively bid as a condition of the contract performance. The Contractor shall submit in the bid package, with the requested information included on the form, the "City of Huntsville, Alabama Report of Ownership Form" listed in this document as Attachment "H". The bidder selected for award of the contract may be required to complete additional forms relating to citizenship or alien status of the bidder and its employees, including e-verify information, prior to award of a contract.

54. SUCCESSORS AND ASSIGNS

The Owner and Contractor bind themselves, their successors and assigns to the other party hereto and to successors and assigns of such other party in respect to covenants, agreements, and obligations contained in this Contract. The Contractor shall not assign this Contract without written consent of the Owner. In no event shall a contract be assigned to an unsuccessful bidder whose bid was rejected because he or she was not a responsible or responsive bidder.

55. WRITTEN NOTICE

Written notice shall be deemed to have been duly served if delivered in person to the individual or a member of the firm or entity or to an officer of the corporation for which it was intended, or if delivered at or sent by registered or certified mail to the last business address known to the party giving notice.

56. RIGHTS AND REMEDIES

Duties and obligations imposed by the Contract Documents and rights and remedies available there under shall be in addition to and not a limitation of duties, obligations, rights and remedies otherwise imposed or available by law.

No action or failure to act by the Owner, Engineer, or Contractor shall constitute a waiver of a right or duty afforded them under the Contract, nor shall such action or failure to act constitute approval of or acquiescence in a breach there under, except as may be specifically agreed in writing.

57. ENTIRE AGREEMENT

This Contract represents the entire agreement between the Owner and the Contractor and supersedes all prior communications, negotiations, representations or agreements, either written or oral. This agreement may be amended only by written instrument signed by both Owner and Contractor.

HUNTSVILLE

Kathy Martin, P.E.
Director
City Engineer

Urban Development Department
Engineering Division

DOWNTOWN GATEWAY (HARVARD ROAD EXTENSION)-REBID

Project No. 65-11-RD03
July 30, 2014

Addendum #1

Attachment "A" is amended as follows:
Replace bid quantities with "replacement", **Attachment "A1".** Please use the revised attachment to submit bid pricing; **all bids must be submitted using Attachment "A1".** Contractors are authorized to download revised quantities from website and paste to a CD-RW (preferably in a live/flash drive format) which must be submitted with the original bid packet. In addition, two hard copies must be signed and submitted with original bid packet. Bid must be submitted from the file (Quantities) provided and downloaded from the City of Huntsville's website. Failure to do so may be cause for rejection of bid. The City reserves the right to reject any altered bid resulting from altering the bid CD in any manner. Contractors should be mindful of making changes to formatting already established in column for Bid Unit Price, as it may affect the outcome of their bid. In order to verify calculations are correct, Contractor may choose to manually multiply those unit costs x bid quantities to ensure extensions are correct, prior to printing and submitting with bid packet. If a price discrepancy is found on the CD-RW, or the correct version of bid quantities is not submitted on the CD-RW which corresponds to the printed hard copy, then printed hard copy prices submitted with original bid documents, with Contractor signature, will prevail. However, calculations must be accurate and will be verified manually.

- Any bidder who designates a change on the outside of the envelope understands that any deletions or additions designated, bidder must further indicate the particular bid item relative to the deletion or addition, even if the deletion or addition references to deduct or add to the Total Base Bid.

REVISIONS TO PLANS:

Delete: Sheets 38D and 38E in Plan Set

Add: Sheets 38D and 38E in Addendum 1

AC
7/30/14

REVISIONS TO QUANTITIES:

Option 2 Item 2-15 QTY from 1,300 TN to 1,400 TN
Option 2 Item 2-18 QTY from 2,500 TN to 2,700 TN
Option 2 Item 2-22 QTY from 6,700 TN to 8,300 LF
Option 2 Item 2-26 QTY from 7 EA to 13 EA
Option 2 Item 2-27 QTY from 11 EA to 17 EA
Option 8 Item 8-13 QTY from 125 GAL to 550 GAL
Option 8 Item 8-14 QTY from 120 TN to 500 TN
Option 8 Item 8-16 QTY from 1,100 LF to 1,900 LF
Option 8 Item 8-17 QTY from 1,100 LF to 1,900 LF
Option 8 Item 8-18 QTY from 80 SF to 150 SF
Option 9 Item 9-37 UNIT from LS to EA
Option 9 Item 9-38 QTY from 600 LF to 2,000 LF

Add:

Option 7 Item 7-16 Replace Existing Concrete Sidewalk, 4" Thick (Includes 4" Stone Leveling Layer) 50 SY

Option 7 Item 7-17 Replace Existing Combination Curb and Gutter, Match Existing 150 LF

Option 8 Item 8-20 Planing Existing Pavement (1.25' Depth) 7,000 SY

Option 8 Item 8-21 Replace Existing Concrete Sidewalk, 4" Thick (Includes 4" Stone Leveling Layer) 75 SY

Option 8 Item 8-22 Replace Existing Combination Curb and Gutter Match, Existing 100 LF

Option 9 Item 9-50 Roundabout Traffic Island complete in place to include curbs, handicap ramps, sidewalk, stamped concrete to match existing islands and all incidentals. 1LS

Option 10 Item 10-11 Replace Existing Concrete Sidewalk, 4" Thick (Includes 4" Stone Leveling Layer) 50 SY

Option 10 Item 10-12 Replace Existing Combination Curb and Gutter, Match Existing 150 LF

Option 11 Item 11-6 Replace Existing Concrete Sidewalk, 4" Thick (Includes 4" Stone Leveling Layer) 100 SY

Option 11 Item 11-7 Replace Existing Combination Curb and Gutter, Match Existing 200 LF

Delete:

Option 13 – Additional Cost to Upgrade Specified Planter Soil to CU Structural Soil

CLARIFICATION TO ADVERTISEMENT:

Bids will be held for 120 days instead of 90 days as stated in the advertisement.

CLARIFICATIONS:

Pre-cast stormwater structures will only be allowed in areas that are pre-approved by the Engineer, due to potential costs incurred for modifications during construction. Typical areas where pre-cast may be allowed (but not guaranteed by the City) are areas where the inlet may be adjusted in the field without compromise to the design or added cost to the City. Pre-cast sanitary sewer materials are not affected by this statement with exception of pre-cast manhole inverts. Contractor may purchase and install pre-cast inverts at his own risk.

There are two identical pay items for Quazite Boxes and #2 Triplex Wire in Option 9, Items 9-38 and 9-39 are for the Library Parking Lot work and Items 9-42 and 9-43 are for the Suggs Center work.

Option 3 Items 3-4, 3-5 and 3-6 include the quantities for the Traffic Signal work in addition to the Street Lights.

In the event the 90 day period for dirt settlement at Fagan Creek is exceeded for additional settlement - the Contract Time will be extended to match the time lost.

Additional Asphalt was added to Option 2 for estimated leveling.

Additional Asphalt was added to Option 8 for the complete replacement of the wearing surface.

There is a possibility that the City will not wait the standard 15 days to issue the NTP following Council approval and the NTP may be issued as early as 8/18/14; no later than 8/29/14.

All addenda are sent via email and recipients are requested to send a confirmation of receipt of all addenda as soon as they are received. The attached pre-bid meeting minutes, all addenda, and attachments for the above-referenced project will become part of the contract documents. All addenda must be acknowledged either on the outside of the bid envelope or on the second page of your bid proposal known as Attachment "B".

Attachments: **Pre-Bid Minutes**
Revised Attachment "A1"
Sheet 38D
Sheet 38E
Options Plan Sheet
Clarifications to Options Mis-Labeled in Plans
Street Light Foundation Drawings

END OF ADDENDUM #1

PRE-BID MEETING
(Non-Mandatory)

PROJECT NAME:	**Rebid** Downtown Gateway (Harvard Road Extension) Originally Bid: April 8, 2014 (Not awarded due to Funding)
PROJECT NUMBER:	65-11-RD03
DATE:	July 24, 2014
PROJECT ENGINEER:	Alan Clements

The following people were in attendance at the Pre-Bid Meeting:

Justin Griggs	Reed Contracting
Chris Lovoy	Reed Contracting
Patrick Greenwell	Water Water Everywhere
Richard Knox	Huntsville Utilities-Electric
Hercy Golson	Huntsville Utilities-Water
Justin York	Huntsville Utilities-Water
Mark Seeley	Miller & Miller
Mickey Donahue	Wiregrass Construction
Greer Walker	Wiregrass Construction
Al Stanley	Stanley Construction
Stan Wiggins	Foley Products
Jerry Cargile	4Site
Kaylin Deal	4Site
Alan Clements	COH-Engineering
Penny Kelly	COH-Engineering
Mary Hollingsworth	COH-Engineering
Woody Maples	COH-Engineering
Michael Thomas	COH-Engineering
Marc Byers	COH-Landscape

1. Introduction of all persons present, their roles, chain of command, importance of submittals to Project Engineer.

   Jerry Cargile – Principal Engineer 4Site
   Jackie Whitaker 4Site – Project Engineer 4Site
   Kaylin Deal 4Site – Landscape Architect 4Site
   Penny Kelly – COH Engineering Procurement & Contracts Coordinator
   Mary Hollingsworth – COH Engineering Procurement & Contracts Assistant
   Michael Thomas COH - Inspector

Woody Maples COH – Inspector
Alan Clements COH – Engineer

Clarification to Advertisement: Bids will be held for 120 days opposed to 90 days as stated in the advertisement.

City will not wait the standard 15 days to issue the NTP following Council approval and NTP may be issued as early as 8/18/14; no later than 8/29/14.

2. Project Engineer gave a brief description of work.

This is a City of Huntsville project. There is no State money involved and the City of Huntsville Specifications will govern unless otherwise directed in the project plans and specification.

The project consists of the construction of approximately 2,300 LF of 4-lane divided roadway between Governors Drive and Williams Avenue and 15 Options. The Base Bid includes the clearing and grubbing, grading, drainage and utilities between Governors Drive and Williams Avenue.

This project is intended to be the Gateway to the Heart of Downtown to support the revitalization of downtown Huntsville. It will connect Governors Drive to Big Spring Park.

The street section is a divided 4-lane that has an inverted crown section where the stormwater will drain to the median through curb openings. Instead of a designated bike path, there is a concrete common use sidewalk that is 10"-12' wide on both sides of the road and will facilitate both pedestrians and cyclists. There will be benches, bike racks, decorative lighting, decorative tree grates, landscaping and irrigation.

There are two (2) different right-of-way sections: South of Fagan Creek, there is a 120' right-of-way and north of Fagan Creek, it transitions down to a 100' right-of-way.

The curb is been revised from a stand-up curb to a mountable type "N" modified curb for constructability purposes.

Base Bid is clearing and grubbing, grading and drainage and utilities from Governors to Williams.
Option 1 Bridge
Option 2 Base, Paving and Lighting from Governors to Williams
Option 3 Street Lights from Governors to Williams
Option 4 Streetscape from Governors to Williams
Option 5 Landscape and Irrigation from Governors to Williams

Option 6 Irrigation Controller Upgrade
Option 7 Full Pavement Removal from St. Clair to Gallatin
Option 8 St. Clair Stormwater Improvement from Harvard Road back west almost to the library.
Option 9 Davis Circle Cut Through to Monroe Roundabout
Option 10 Mill and Replacement of St. Clair. Options 10 and 7 will be compared; whether we're going to mill and replace or replace the whole section depending on the condition of the road.
Option 11 Mill and Replacement of Pelham. This is the section between the Base Bid and the Roundabout. Basically putting a new wearing surface all the way through and tying it together.
Option 12 Dumpster Modifications due to profile changes so the access changes to that dumpster.
Option 13 Planter Soil Upgrade-**this option will be deleted in Addendum.**
Option 14 Digital As-Builts. Requirement to have hand drawn redlines required for the project and will have an option for digital as-builts.
Option 15 Construction Trailer-Type 2 Construction Trailer for the duration of the project. The desired location is the staging area for the project; where the construction trailers were located for Twickenham.

There is also a note on the plans related to the timing of the fill placement. Due to the soft soils OMI, the Geotechnical Engineer, encountered near Fagan Creek, OMI has recommended that the soils near Fagan Creek be preloaded with soil early in the project to allow for settlement prior to the bridge and roadway construction. There is a requirement in the plans for the Contractor to have that area surveyed to include the installation of 4 concrete monuments and to monitor that settlement over a minimum three (3) month time period. That data will be handed to OMI and they will plot that out and will make sure that we have had sufficient consolidation before the Contractor begins placing abutments and working on the bridge structure. OMI wants the as-built survey after three (3) months to check for settlement. This is incidental to the mobilization pay item.

Drawing Clarifications: Underground Electric Missing at Fagan Creek – will be Added in Addendum

Richard Knox of Huntsville Utilities stated that Huntsville Utilities had done most of the underground relocation work already. Mr. Knox said that there was some additional underground work that needs to be done and that the quantities for this work have been included in the bid quantities.

He pointed out the existing conduit and stated that there is a 5" conduit running parallel to the wall and comes back and gets into the cabinets on Pelham Street side. On the south side of the new bridge installment, there is a cabinet setting there now that is in the way that needs to be relocated to the west and the conduit that will be installed underneath the proposed bridge fill will be red HDPE

without joints furnished by Huntsville Utilities (both sides of the bridge). The existing manholes located within the limits of Harvard Street project all have to be adjusted, but Huntsville Utilities will be doing that work at the time the Contractors needs it done.

There are two (2) poles on the northwest corner of the new bridge that required (2) underground 6" conduits installed back to the northeast where Huntsville Utilities can connect to existing Huntsville Utilities electric manhole. In addition to the installation of the sectionalizing cabinet bases and the installation of the conduit, there is a bore required for Fagan Creek to complete the system tie.

In option 9, Mr. Knox said that there is existing underground running north to south at the existing cul-de-sac that needs to be adjusted. It will be required that the existing sectionalizing cabinet location be moved south and another moved to the north so that the roadway can be constructed.

Mr. Knox added that Huntsville Utilities will be relocating the power poles in the proposed roadway and that Huntsville Utilities will be installing the roadway streetlights for this section of road. Mr. Knox said that the contractor will be required to relocate 3 existing parking lights in the Library parking lot and that the existing poles and fixtures can be reused. Contractor is to install new conduit, conductors, and concrete foundations. On the north side of the roadway, the contractor will be required to add 3 new Huntsville Utilities Approved 150W HPS parking lights for the new parking lot at the Suggs Center all compete in place.

Hercy Golson with the Huntsville Utilities Water Department said that all of the water relocation work will be done with Huntsville Utilities forces. He said that the Water Department would coordinate with the Contractor, but all water work will be done by Huntsville Utilities Water Department.

Justin Griggs asked about aid-to-construction costs. Alan said that aid-to-construction is going to be paid directly by the City.

Alan said AT&T and WOW Cable are located along St. Clair at the Howard intersections; both have been notified and are scheduled to bore and relocate.

Question was asked about the demolition of the existing buildings.
Michael Thomas said that we have demo permits on them. Public Works will be demoing them. We will coordinate with them. Alan said this is not part of the project, it will be done outside of the project. Chris Lovoy asked if it was slabs, foundations and anything associated with the buildings, but not the parking lots or curbs. Michael said this is correct. Question was asked if there was any idea when this would take place. The answer was City Engineering coordinating with Public Works to schedule the work.

Street Light Foundation Details Missing and will be added in Addendum

Sheets with Options Mislabeled:

1 H, 1 I, 4, 16A, 17, 18, 18A, 19, 19A, 44, 44A, 49, 49A & 50

Table of corrected option labels will be issued in the Addendum.

Sheet 38A: Delete Note that states "No Utilities between Station 11+50 and 21+50"

3. Progress Schedule of Operations was discussed, as well as erosion control plan, disposal of debris from clearing and grubbing, plan for control of concrete temperature during hot/cold weather, etc. If the progress report (critical path) is not received, YOUR first pay estimate will NOT BE PROCESSED UNTIL IT IS RECEIVED).

4. Discussed all Permits.

   The Contractor will be responsible for all Permits.
   The City has an ADEM permit for this project and the Contractor will be responsible for transferring it from the City of Huntsville to Contractor once a contract is signed.

5. Utility Project Notification – Utility company representatives gave a description of their utility conflicts. Any problems the utility representative anticipates should be explained so that Project Engineer and Contractor can plan to include in the project.

   Each utility representative should provide Contractor with a name and phone number to contact for conflict assistance. Contractor is responsible for locating all utilities.

   It was discussed that ATT, WOW have an existing underground fiber and Water has an 8" DI line at St. Clair where the new road is to be constructed and Water has an 8" DI at the proposed Pelham / Harvard Intersection. All utilities will be relocated by Utility Owner and coordinated by Contractor.

6. Discussed Submittal of Shop Drawings, working drawings, material submittals, job-mix formulas in accordance with the time limits in the contract.
   Will have all job mix submittals and permanent materials submitted; electronically submitted is fine.

Bridge shop drawings - all permanent materials to included concrete and asphalt mix designs, storm and sanitary sewer manholes, pipe, castings, light fixtures and poles, tree gates, benches, trash receptacles, etc.

7. Any right-of-way issues were discussed. Detail whether all property has been acquired to complete project and if not, when expected.

   All Right-of-way has been acquired by the City and the buildings (including foundations) that are currently located in the ROW between Governors Drive and St. Clair will be demolished by Public Works and the debris removed from the site.

8. Any other projects that may conflict should have their project engineer, contractor and representatives in attendance to discuss.

   Twickenham and Gallatin projects will be ongoing adjacent to a portion of the base bid. The contractor is required to maintain access to those facilities. **The adjacent Apartments are occupied.**

   Mr. Knox asked about the traffic signal design at Governors Drive. Jerry said that all underground will be included in Contractors scope and Traffic Engineering that will install poles, conductors and signals.

9. Contractor is required to submit pricing (Attachment "A") on CD-RW (preferably in a live/flash drive format) in the Excel format made available for download from the Engineering website. The CD-RW must be in working condition and included with original bid packet and reflect the correct revision, along with two signed hard copies. Failure to do so may be cause for rejection of bid. If a price discrepancy is found on CD-RW, or the correct version of bid quantities is not submitted on the CD-RW which corresponds to the printed hard copy, then printed hard copy prices submitted with original bid documents, with Contractor signature, will prevail.

10. Payment

The OWNER agrees to pay the contractor as follows: Once each month per project the OWNER shall make partial payment to the Contractor on the basis of duly certified and approved estimates of the work performed during the preceding month by the Contractor, less five per cent (5%) of the amount of such estimate, which is to be retained by the City until all of the work has been performed. Liquidated damages will be deducted from all invoices when the invoice estimate period end date is later than the contract completion date. All pay requests will be submitted by hard copy and on a disk. The hard copy will be printed from the disk. The OWNER will provide the disk to the contractor. Two originals and two copies of the invoices are required before payment will be made. The disk should be submitted each month, along with the originals and

copies, to Odessa Sales in the Engineering Department. No further retainage will be held after fifty percent of the contract is complete. All payments to contractor will be made as soon as practical after the approval and finance processes have been completed.

11. Project Engineer discussed plans, specs and special provisions.

a. A **review of the plans** was made with emphasis placed on unusual construction features and special drawings.

b. Each pay item of the contract should be read out and any questions concerning the method of measurement or payment discussed.

c. When a contractor is new to COH contracts, the standard specifications should be discussed with emphasis on time charges, extra work, materials, etc.

d. State of Alabama classification required shall be stated. (HS) Highways and Streets or (MU) Municipal & Utility.

e. There are **Three Hundred and Sixty-Five (365) Calendar days to complete the Base Bid. If any or all of the Options are awarded an additional One Hundred and Fifteen (115) calendar days will be awarded for a total of Four Hundred and Eighty (480) calendar days.**

Council: 8/14/14; Anticipated NTP 8/18/14

f. (include whether **construction trailer** is required and whether as-builts are required)

g. Introduction and explanation of any revisions to Supplement to General Requirements – specifically detail the following.

46. SHOP DRAWINGS

The approval of shop drawings by the Engineer will cover only the features of the design and in no case shall this approval be considered to cover error or omissions in shop details or a check of any dimensions. The Contractor shall be responsible for the accuracy of the shop drawings, the fabrication of materials and the fit of all connections; and he shall bear the cost of all extra work in erection caused by errors in shop drawings or in fabrication, inaccurate workmanship, misfits of connections or for any changes in fabrication necessary. No work shall be done on the material before the shop drawings have been approved. Any material that the Contractor orders prior to the approval shall be at the Contractor's risk.

Substitutions or changes whether indicated or implied on shop drawings will not be considered as changes regardless of the Engineer's approval of shop drawings

unless the change has been previously submitted and approved as a change order per the requirements for changes in the contract.

After a shop drawing has been approved, no changes shall be made unless directed in writing to the Owner and acceptance by the Owner of said changes. Any acceptance of change by the Owner does not constitute a change to the contract unless that change has been approved and directed in writing per change order. Compensation for preparing and furnishing all shop and working drawings shall be included in the contract unit prices for the various pay items of work.

18. **LIQUIDATED DAMAGES**

It is further understood and agreed by and between the parties to this contract, that in the event the work to be performed under this contract is not completed at the expiration of the contract time, then, and in that event, the Contractor shall pay to the City the amounts per calendar day by the schedule shown in the schedule in the City of Huntsville Standard Specifications, Section 80.11 – "Schedule of Liquidated Damages" for each day thereafter until such work is completed. The City will deduct said sum or sums from any money due the Contractor under this contract for any and all invoices submitted after the contract due date. (See Section 12). Attachment "F" – Sample of Request for Payment with Liquidated Damages shall become a part of the contract documents. Liquidated damages will be deducted from all invoices when the invoice estimate period end date is later than the contract completion date.

Section 80.11 – "Schedule of Liquidated Damages" has been amended as follows effective 2/1/11 and revised in COH specifications 3/7/11:

Original Contract Amount		Liquidated Damages Daily Charge	
More Than	To and Including	Calendar Day or Fixed Date	Work Day
$ 0	$ 100,000	$ 200	$ 400
$ 100,000	$ 500,000	$ 550	$ 1,100
$ 500,000	$ 1,000,000	$ 900	$ 1,800
$ 1,000,000	$ 2,000,000	$ 1,350	$ 2,700
$ 2,000,000	.....	$ 1,550	$ 3,100

When the contract time is on the calendar day or date basis, the schedule for calendar days shall be used. When the contract time is on a work day basis, the schedule for work days shall be used.

Amounts in accordance with ALDOT and COH specifications and is based on contract amount before Change Orders.

12. Sequence of Construction and Traffic Control with the contractor made aware of his/her responsibility to handle traffic safely through the work zone. The method of payment for traffic control shall be discussed and clearly understood.

Traffic Control is a lump sum Bid Item and Contractor will be required to submit the proposed Traffic Control Plan for review and approval prior to any Traffic Handling associated with the project. Traffic Control plan does not have to be stamped by an engineer. Contractor can come up with his own scheme. One intersection must be open to local traffic (Harvard/St. Clair or Harvard/Pelham) to serve as Detour. Williams and Lowe will both be closed. Contractor can go ahead and set up barricades after the public announcement is made and City has approved Contractor's Traffic Control Plan.

13. For any trench cuts within existing roadways, Contractor is required to patch area with asphalt mix within the same day, unless otherwise specified by the Engineer. (Dense graded Base is no longer an acceptable means of traffic control within existing roadway cuts.) Asphalt Patching will be incidental to item being installed.

14. Any subcontractors present were given the opportunity ask questions or discuss items with which they are concerned. The Prime Contractor should be advised that no work by a subcontractor will be permitted unless approved by contract or in writing. Attachment "C" – "Subcontractor's Listing" in the Supplement to General Requirements for Construction of Public Improvements, City of Huntsville, Alabama has been revised and bidders are advised to pay special attention to the text and instructions listed on the attachment. Contractor shall keep the "Subcontractor's Listing" updated throughout the project duration and submit a copy of the listing with the request for final payment. The Subcontractor(s) is required to possess a valid State of Alabama general contractor's license and City of Huntsville license both of which shall be maintained throughout the term of the contract. Noncompliance with this request may cause delay in payment to the Contractor.

15. Anyone working for the Contractor, whether equipment and/or personnel, which are not the Prime Contractors and are not covered by subcontract, then it shall be understood that the Prime Contractor will be required to furnish a rental agreement for the equipment and carry personnel performing such work on his/her labor payroll.

E-VERIFY – NOTICE

The Beason-Hammon Alabama Taxpayer and Citizen Protection Act, Act No. 2011-535, Code of Alabama (1975) § 31-13-1 through 31-13-30 (also known as and hereinafter referred to as " the Alabama Immigration Act") as amended by Act No. 2012-491 on May 16, 2012 is applicable to all competitively bid contracts with the City of Huntsville. As a condition for the award of a contract and as a term and condition of the contract with the City of Huntsville, in accordance with § 31-13-9 (a) of the Alabama Immigration Act, as amended, any business entity or employer that employs one or more employees shall not knowingly employ, hire for employment, or continue to employ an unauthorized alien within the State of Alabama.

During the performance of the contract, such business entity or employer shall participate in the E-Verify program and shall verify every employee that is required to be verified according to the applicable federal rules and regulations. The business entity or employer shall assure that these requirements are included in each subcontract in accordance with §31-13-9(c). Failure to comply with these requirements may result in breach of contract, termination of the contract or subcontract, and possibly suspension or revocation of business licenses and permits in accordance with §31-13-9 (e) (1) & (2). Code of Alabama (1975) § 31-13-9 (k) requires that the following clause be included in all City of Huntsville contracts that have been competitively bid and is hereby made a part of this contract:

"By signing this contract the contracting parties affirm, for the duration of the agreement, that they will not violate federal immigration law or knowingly employ, hire for employment, or continue to employ an unauthorized alien within the State of Alabama. Furthermore, a contracting party found to be in violation of this provision shall be deemed in breach of the agreement and shall be responsible for all damages resulting therefrom."

Contractor's E-Verify Memorandum of Understanding shall be a part of the contract bid documents and shall be submitted with the bid package.

- Bidders' attention is directed to the following item (#53) in the "Supplement to General Requirements for Construction of Public Improvements" document as posted on the COH website for this project:

53. ALABAMA IMMIGRATION ACT (Beason-Hammon Alabama Taxpayer and Citizen Protection Act, Act No. 2011-535, Code of Alabama (1975)

Compliance with the requirements of the (Beason-Hammon Alabama Taxpayer and Citizen Protection Act, Act No. 2011-535, Code of Alabama (1975) § 31-13-1 through 31-13-30, as amended by Alabama Act 2012-241, commonly referred to as the Alabama Immigration Law, is required for City of Huntsville, Alabama contracts that are competitively bid as a condition of the contract performance. The Contractor shall submit in the bid package, with the requested information included on the form, the "City of Huntsville, Alabama Report of Ownership Form" listed in this document as Attachment "H". The bidder selected for award of the contract may be required to complete additional forms relating to citizenship or alien status of the bidder and its employees, including e-verify information, prior to award of a contract.

17. Asked if there are any further questions.

Q: Asked if it could be addressed in the Addendum how the City will handle the warranty at the bridge with known soil issues on both sides of the creek.
A: The Contractor will only be responsible for the items of work that he has control of during construction. Any damage as a result of additional settlement following the City approval to backfill will not be the Contractors responsibility.

Q: Who will determine that it is ok to proceed?
A: OMI, the Geotechnical Engineering firm.

Q: Item 9-37 has 3 lump sum unit. Is that correct?
A: It should be each.

Q: How is payment to be made for the pedestrian bridge removal in Option Number 1?
A: The cost of the pedestrian bridge removal is to be included in the bridge lump sum.

Q: There is a note on the bridge about sealing bridge joints, 2" it is typically 1 ½"?
A: The correct dimension is 1-1/2" and the joint does not have to be sealed.

Q: Do the concrete joints have to be sealed?
A: Any concrete to concrete joints such as back of curb to sidewalk or face of curb to concrete paving will require ½" expansion joint and sealed with non-sag urethane joint sealer

Q: The handicap pavers on the sidewalk are at varying widths is this correct and are Prefab truncated dome panels acceptable.
A: The handicap pavers are to be "Pavestone ADA Compliant Paver 200" or approved equal. Color is to be Red/Grey mix and pavers are to be installed in a "Runner Bond" pattern in compliance with the manufactures specifications. Joints in between pavers are to be filled with polymeric sand.

Q: Some of the details show 2 gauge wire mesh in several places.
A: Should 2.9 instead of 2.

Q: Stamped concrete for Option No. 9, Item 9-27, how will we pay for differences of color?
A: A new item will be added in the addendum.

Q: Will the City choose the lowest and best options.
A: Yes, the lowest of the base bid or the base bid and any combinations of the options.

Q: Do we have an idea of what the budget is?
A: Alan said that he does not.

Q: Where are we with gas relocation?
A: Huntsville Gas Utilities will relocate any gas that is in conflict but no conflicts have been reported by the Gas Department.

Q. It was asked that following the preloading of dirt when the abutments are to be constructed how will the contractor be paid for the dirt removal and replacement?
A. The removal and replacement of the borrow material in place from the preload for abutment construction will be incidental to the borrow pay item.

Q. How will unclassified excavation be measured for payment?
A. The Contractor will be paid the bid quantity for unclassified excavation for all on site dirt work that includes but not limited to the following: stripping of topsoil, removing materials to subgrade, hauling off any unsuitable and/or excess materials and placing of 4" layer of topsoil for grassing.

Clarification on Sheet 85A:

Note that "P.O.C. #1" as shown is required for "Option 5." Contractor shall disregard the reference to "Option #4" and the reference to "If Alternate Take." Also, note that "P.O.C. #2" as referred to on this sheet is required for "Option 5." See sheet 89 for location of "P.O.C. #2."

Sheet 86: Disregard reference to "P.O.C. #1" and refer to Sheet 85A.

18. All questions will be answered and all clarifications made by addendum. **All addenda are sent via email and recipients are requested to send a confirmation of receipt of all addenda as soon as they are received.** Last day for questions concerning this project before the bid will be **July 28 until 12:00 p.m.** via fax (256) 427-5325 or email to: penny.kelly@huntsvilleal.gov. Response to contractor questions will be **July 30, 2014 until 5:00 p.m.** **Bids open: August 5, 2014 at 10:00 a.m.** in the **2nd Floor Conference Room**, 320 Fountain Circle, Huntsville, AL.

The pre-bid notes and all addenda shall become a part of the contract documents.

ATTACHMENT "A1"

7/30/2014

Downtown Gateway (aka Harvard Road Extension) - REBID
Project No. 65-11-RD03

UNIT BID SHEET

ITEM NO.	DESCRIPTION	QTY	UNIT	BID PRICE	BID AMOUNT
1	Mobilization	1	LS		$ -
2	Clearing and Grubbing (Contains all demolition and Removal Items, Approx. 21	1	LS		$ -
3	Unclassified Excavation (Includes stripping, stockpiling and placing 4" of topsoil)	9,500	CYD		$ -
4	Unclassified Excavation (Special Undercutting)	6,400	CYD		$ -
5	Topsoil (Furnish and Install)	750	CYD		$ -
6	Borrow Excavation	28,000	CYD		$ -

7	Engineering Controls	1	LS		$ -
8	Mulching And Seeding	3	AC		$ -
9	Erosion Control Product, Type S2 (Blankets for Slopes)	2,200	SY		$ -
10	Silt Fence Install, Maintain & Remove	2,700	LF		$ -
11	Orange Safety Fence	3,000	LF		$ -
12	Temporary Construction Entrance, Utilizing Coarse Aggregate, ALDOT #2	5	EA		$ -
13	Inlet Protection (20" Wattles)	1,100	LF		$ -
14	Furnish and Install Temporary Traffic Control	1	LS		$ -
15	8" Corrugated HDPE Drain (Complete in Place to Include Excavation, Pipe, #78 Stone Backfill)	813	LF		$ -
16	15" Roadway Pipe (Class 3 R.C.)	164	LF		$ -

17	18" Roadway Pipe (Class 3 R.C.)	1,233	LF		$ -
18	24" Roadway Pipe (Class 3 R.C.)	384	LF		$ -
19	30" Roadway Pipe (Class 3 R.C.)	512	LF		$ -
20	22" Span, 14" Rise Roadway Pipe (Class 3 R.C.)	232	LF		$ -
21	29" Span, 18" Rise Roadway Pipe (Class 3 R.C.)	571	LF		$ -
22	36" Span, 23" Rise Roadway Pipe (Class 3 R.C.)	41	LF		$ -
23	Junction Boxes, Type 1	17	EA		$ -
24	Junction Boxes, Type 1 (Special) (Large JB)	3	EA		$ -
25	Inlets, Type S3 (1 Wing)	4	EA		$ -
26	Inlets, Type S3 (2 Wing)	2	EA		$ -
27	Inlets, Type B (Surface Grates)	4	EA		$ -

28	Nyloplast 10" Perforated Catch Basin (Includes #78 stone underdrain & River Rock with Filter Blanket)	10	EA		$ -
29	Nyloplast 24" Perforated Catch Basin (Includes #78 stone underdrain & River Rock with Filter Blanket)	11	EA		$ -
30	Inlets, Type E (Modified) (C.O.H. Standard Curb Inlet)	4	EA		$ -
31	Inlets, Open Throat	6	EA		$ -
32	8 Inch Ductile Iron Sanitary Sewer Gravity Pipe (All Depths) Laid Complete in Place	966	LF		$ -
33	48 Inch Manhole	3	EA		$ -
34	Core and Connect to Existing Manhole	2	EA		$ -
35	TVI and Vacuum Testing	1	LS		$ -

36	5" PVC Conduit (Contractor to Provide Labor Concrete for Elbows and All Incidentals)	800	LF		$ -
37	6" PVC Conduit (Contractor to Provide Labor Concrete for Elbows and All Incidentals)	200	LF		$ -
38	Set New Sectionalizing Cabinet Base (Contractor to Provide Labor Stone and all Incidentals)	5	EA		$ -
39	Concrete for Utility Encasement (As Directed By the Engineer)	30	CYD		$ -
40	Fagan Creek Electrical Bore (5" Red Sch. 80 HDPE)	150	LF		$ -
41	SLOPE PAVING	10	CYD		$ -
	TOTAL Base Bid				$0.00

	Option No. 1: BRIDGE				
1-1	Mobilization to Include Engineering Controls	1	LS		$ -
1-2	Bridge	1	LS		$ -

1-3	Handrail with New Orleans Finial Model No. 120 or Approved Equal (Areas outside the limits of the Bridge)	200	LF		$ -
1-4	Bridge Retaining Walls Per ALDOT Std Drawing RW 10-4 (Quantity based on Exposed Face) Includes Stone Backfill Weep Holes And All Incidentals	870	SF		$ -
1-5	Bridge End Slab ALDOT Special Drawing (BES-450-0)	350	SY		$ -
1-6	HP 12 x 53 Steel Piling Furnish and Driven	2,400	LF		$ -
1-7	Pile Points, Type A 12"	56	EA		$ -
1-8	Slope Paving	20	CYD		$ -
1-9	Bridge Traffic Striping, Class W, Type A (All Colors and Widths)	1	LS		$ -
	TOTAL Option No. 1				$0.00

Option No. 2: HARVARD ROAD BASE PAVE AND SIGNAL

2-1	Mobilization	1	LS		$ -
2-2	Topsoil (Furnish and Install)	500	CYD		$ -
2-3	Reset Fire Hydrant	6	EA		$ -
2-4	Valve Box Reset (Gas)	2	EA		$ -
2-5	Valve Box Reset (Water)	11	EA		$ -
2-6	Engineering Controls	1	LS		$ -
2-7	Tapered Curb Opening with 24" Diameter Pervious Concrete Apron (Stained Dark Brown Spec. Color)	100	EA		$ -
2-8	5" Thick, Crushed Aggregate Base Course, Type B, Plant Mixed	900	SY		$ -

2-9	10" Thick, Crushed Aggregate Base Course, Type B, Plant Mixed, 2-5" Lifts (Material placed outside of Paving Limits will not be measured for payment but will be Considered Incidental to Layer)	17,360	SY		$ -
2-10	Base Failure Repair Includes Pavement Removal and (2) 4" Thick Layers of 1" Max Aggregate Size Binder	150	SY		$ -
2-11	Bituminous Treatment A, Prime Coat, (0.10 gal/syd)	1,900	GAL		$ -
2-12	Tack Coat .07gal/syd	1,500	GAL		$ -
2-13	1" Thick, Superpave Bituminous Concrete Wearing Layer, 1/2" Max. Aggregate Size, ESAL Range C/D, (110 lb/syd)	50	TN		$ -
2-14	1.21" Thick, Superpave Bituminous Concrete Wearing Layer, 1/2" Max. Aggregate Size, ESAL Range C/D, (133 lb/syd)	100	TN		$ -

2-15	1.25" Thick, Superpave Bituminous Concrete Wearing Layer, 1/2" Max. Aggregate Size, ESAL Range C/D, (138 lb/syd)	1,400	TN		$ -
2-16	2" Thick, Superpave Bituminous Concrete Wearing Layer, 1/2" Max. Aggregate Size, ESAL Range C/D, (220 lb/syd)	125	TN		$ -
2-17	2.27" Thick, Superpave Bituminous Concrete Upper Binder Layer, 1" Max. Aggregate Size, ESAL Range C/D, (250 lb/syd)	175	TN		$ -
2-18	3.0" Thick, Superpave Bituminous Concrete Upper Binder Layer, 1" Max. Aggregate Size, ESAL Range C/D, (330 lb/syd)	2,700	TN		$ -
2-19	Plain Cement Concrete Pavement (Modified), 5" Thick	1,267	SY		$ -
2-20	Concrete Sidewalk, 4" Thick (Includes 4" Thick Stone Leveling Layer)	6,554	SY		$ -
2-21	Concrete Gutter (Valley)	62	LF		$ -
2-22	Concrete Curb, Type N (6" x 16")	8,300	LF		$ -

2-23	Combination Curb & Gutter, Type C (Modified) (18" Gutter)	1,000	LF		$ -
2-24	6" Concrete Curb, Transition From Roadway to Bridge (Includes Dowels and All	80	LF		$ -
2-25	Handicap Ramps with ADA Detectable Warning Pavers (All Widths)	25	EA		$ -
2-26	36" DIA. Traffic Signal Pole Foundation ALDOT Drawing Number T.S.D. 730-4	13	EA		$ -
2-27	24" x 30" Quazite Traffic Signal Junction Box (City Traffic Standard)	17	EA		$ -
2-28	Parking Meter Pom Model APM-N Complete in Place	20	EA		$ -
2-29	Dotted, Class 2, Type A Traffic Stripe (4 Wide)	1,100	LF		$ -
2-30	Broken White, Class 2, Type A Traffic Stripe (4" Wide)	4,000	LF		$ -

2-31	Solid White, Class 2, Type A Traffic Stripe (8" Wide)	900	LF		$ -
2-32	Solid White, Class 2, Type A Traffic Stripe (12" Wide)	1,900	LF		$ -
2-33	Solid White, Class 2, Type A Traffic Stripe (4" Wide)	900	LF		$ -
2-34	Broken Yellow, Class 2, Type A Traffic Stripe (4" Wide)	250	LF		$ -
2-35	Class 1, Type B, Paint Striping (Parking Lot Areas)	1,000	LF		$ -
2-36	Solid Yellow, Class 2, Type A Traffic Stripe (4" Wide)	1,750	LF		$ -
2-37	Traffic Control Markings and Legends, Class 2, Type A	2,700	SF		$ -
2-38	Solid White, Class 1, Type A Traffic Stripe (4" Wide) (For Cycle Track Markings)	5,800	LF		$ -
2-39	Temporary Striping (All Colors) (4" Wide)	1,000	LF		$ -

2-40	Temporary Marking	100	SF		$ -
2-41	Pavement Markers, Class A, Type 2-D	60	SF		$ -
2-42	Pavement Markers, Class A, Type 2-C	150	EA		$ -
2-43	Precast Concrete Parking Bumpers	7	EA		$ -
2-44	Class 2, Aluminum Flat Sign Panels 0.04" Thickness (Type III Background)	200	SF		$ -
2-45	Furnish and Install Temporary Traffic Control	1	LS		$ -
2-46	Solid Sodding (Bermuda)	8,000	SY		$ -
2-47	6" Class 200 PVC Irrigation Sleeve	1,000	LF		$ -
2-48	4" Class 200 PVC Irrigation Sleeve	750	LF		$ -
	TOTAL Option No. 2				$0.00

Option No. 3: STREETLIGHTS

3-1	Mobilization	1	LS		$ -
3-2	Enhanced Washington Postlite Light Pole Assembly with Breakaway Base, 400 Watt (Or City Approved Equal) Complete in Place to Include Concrete Foundation, Pole, Fixture, Grounding, Security Lug and All Incidentals	13	EA		$ -
3-3	Granville Light Pole Assembly, 150 Watt (Or City Approved Equal) Complete in Place to Include Concrete Foundation, Pole, Fixture, Grounding Security Lug and All Incidentals	55	EA		$ -
3-4	#2 Triplex 600V UG Cable Furnish and Install	8,000	LF		$ -
3-5	Quazite Box 12" x 12"	85	EA		$ -
3-6	2", Non-Metallic Conduit to Include Fittings and All Incidentals	10,000	LF		$ -
	TOTAL Option No. 3				$0.00

Option No. 4: STREETSCAPE

4-1	Mobilization	1	LS		$ -
4-2	River Rock (Median Gardens to include geotextile filter blanket)	20	TN		$ -
4-3	Structural Soil (See Specifications for Details)	320	CYD		$ -
4-4	Furnish & Install Trash Receptacles	18	EA		$ -
4-5	Furnish & Install Park Benches	19	EA		$ -
4-6	Furnish & Install Bike Rack	16	EA		$ -
4-7	Furnish & Install 60" Square Tree Grates	40	EA		$ -
	TOTAL Option No. 4				$0.00

Option No. 5: LANDSCAPING AND IRRIGATION

5-1	Mobilization	1	LS		$ -

5-2	Shrubs, Ophiopogon Japonicus (Mondo Grass), 2" Pot, 36" Height	335	EA		$ -
5-3	Trees, Acer Rubrum "October Glory" (October Glory), 3" Cal., 12'-15' Height	17	EA		$ -
5-4	Trees, Querus Lyrata (Overcup Oak), 4" Cal., 12-15' Height	18	EA		$ -
5-5	Trees, Querus Alba (White Oak), 4" Cal., 12-15' Height	26	EA		$ -
5-6	Trees, Tilia Cordata (Littleleaf Linden) (Greenspire), 3" Cal., 12-15' Height	32	EA		$ -
5-7	Trees, Ulmus Americana "Princeton" (Princeton Elm), 4" Cal., 12-15' Height	55	EA		$ -
5-8	Irrigation System	1	LS		$ -
5-9	Shrubs, Prunus Laurocerasus (Luykens Laurel), 5 Gal, 21-36" Height	75	EA		$ -

5-10	Shrubs, Thuja Occidentalis "Fire Chief" (Globe Arborvitae), 3 Gal, 18-24" Ht	344	EA		$ -
5-11	Shrubs, Juniperus Parsoni (Parsons Juniper), 1 Gal	30	EA		$ -
5-12	Trees, Quercus Lyrata "Highbeam" (Highbeam Overcup Oak), 4" Cal., 12-15' Height	2	EA		$ -
5-13	Shrubs, Hypericum Patulum, 2" Pot	82	EA		$ -
5-14	Shrubs, Buxus Microphylla (Littleleaf Boxwood), 5 Gal	55	EA		$ -
5-15	Shrubs, Ilex x meserveae "Blue Prince", 7 Gal	75	EA		$ -
5-16	Seasonal Annuals	1,293	EA		$ -
	TOTAL Option No. 5				$0.00

	Option No. 6: Additional Cost to Upgrade Irrigation to Baseline Station including all Incidentals				
6-1	Mobilization	1	LS		$ -
6-2	Additional Cost to Upgrade Irrigation Controllers (3) to Baseline Station 3200 (Including All Incidentals)	1	LS		$ -
	TOTAL Option No. 6				$0.00

	Option No. 7: Demo and Replace St. Clair Ave Pavement (Harvard Road to Gallatin St)				
7-1	Mobilization	1	LS		$ -
7-2	Engineering Controls	1	LS		$ -
7-3	Unclassified Excavation (Including Pavement Removal and Disposal)	1,500	CY		$ -
7-4	Roadbed Processing To Include Subgrade Preparation and Blue Topping	10	STA		$ -
7-5	8" Thick, Crushed Aggregate Base Course, Type B, Plant Mixed, (Installed in 2-4" Lifts)	3,500	SY		$ -

7-6	Bituminous Treatment A, Prime Coat, (0.10 gal/syd)	350	GAL		$ -
7-7	Tack Coat (.07 gal/syd)	250	GAL		$ -
7-8	1" Thick, Superpave Bituminous Concrete Wearing Layer, 1/2" Max. Aggregate Size, ESAL Range C/D, (110 lb/syd)	250	TN		$ -
7-9	2" Thick, Superpave Bituminous Concrete Upper Binder Layer, 1" Max. Aggregate Size, ESAL Range C/D, (220 lb/syd)	450	TN		$ -
7-10	Broken Yellow, Class 2, Type A Traffic Stripe (4" Wide)	1,900	LF		$ -
7-11	Solid Yellow, Class 2, Type A Traffic Stripe (4" Wide)	1,900	LF		$ -
7-12	Temporary Striping (All Colors) (4" Wide)	1,900	LF		$ -
7-13	Temporary Marking	80	SF		$ -

7-14	Traffic Control Markings and Legends, Class 2, Type A	325	SF		$ -
7-15	Furnish and Install Temporary Traffic Control	1	LS		$ -
7-16	Replace Existing Concrete Sidewalk, 4" Thick (Includes 4" Stone Leveling Layer)	50	SY		$ -
7-17	Replace Existing Combination Curb and Gutter, Match Existing	150	LF		$ -
	TOTAL Option No. 7				$0.00

	Option No. 8: St. Clair Stormwater Improvements				
8-1	Mobilization	1	LS		$ -
8-2	Clearing and Grubbing (contains all demo items, APPROX. 0.50 ACRES)	1	LS		$ -
8-3	Engineering Controls	1	LS		$ -
8-4	Unclassified Excavation	1500	CYD		$ -
8-5	Inlet Protection (Wattles)	12	EA		$ -

8-6	18" Roadway Pipe (Class 3 R.C.)	14	LF		$ -
8-7	36" Roadway Pipe (Class 3 R.C.)	448	LF		$ -
8-8	58.5" Span, 36" Rise Roadway Pipe (Class 3 R.C.)	634	LF		$ -
8-9	Junction Boxes, Type 1 (Special) (Large JB)	4	EA		$ -
8-10	Manhole Covers Reset (Storm)	1	EA		$ -
8-11	10" Thick, Crushed Aggregate Base Course, Type B, Plant Mixed, (Installed in 2-5" Lifts)	1,467	SY		$ -
8-12	Bituminous Treatment A, Prime Coat, (0.10 gal/syd)	150	GAL		$ -
8-13	Tack Coat (.07 gal/syd)	550	GAL		$ -
8-14	1.25" Thick, Superpave Bituminous Concrete Wearing Layer, 1/2" Max. Aggregate Size, ESAL Range C/D, (140 lb/syd)	500	TN		$ -

8-15	2.27" Thick, Superpave Bituminous Concrete Upper Binder Layer, 1" Max. Aggregate Size, ESAL Range C/D, (250 lb/syd)	200	TN		$ -
8-16	Broken Yellow, Class 2, Type A Traffic Stripe (4" Wide)	1,900	LF		$ -
8-17	Solid Yellow, Class 2, Type A Traffic Stripe (4" Wide)	1,900	LF		$ -
8-18	Traffic Control Markings, Class 2, Type A	150	SF		$ -
8-19	Furnishing and Installing Temporary Traffic Control	1	LS		$ -
8-20	Planing Existing Pavement (1.25' Depth)	7,000	SY		$ -
8-21	Replace Existing Concrete Sidewalk, 4" Thick (Includes 4" Stone Leveling Layer)	75	SY		$ -
8-22	Replace Existing Combination Curb and Gutter, Match Existing	100	LF		$ -
	TOTAL Option No. 8				$0.00

Option No. 9: Davis Ct. Cul-de-sac to Heart of Huntsville Roundabout & Hsv/Mad. Co. Public Library Parking Modifications

9-1	Mobilization	1	LS		$ -
9-2	Clearing and Grubbing (contains all demo items, APPROX. 2 ACRES)	1	LS		$ -
9-3	Unclassified Excavation (Includes stripping, stockpiling and placing topsoil)	1,000	CYD		$ -
9-4	Unclassified Excavation (Special Undercutting)	2,100	CYD		$ -
9-5	Borrow Excavation	3,000	CYD		$ -
9-6	Topsoil (Furnish and Install)	800	CYD		$ -
9-7	Engineering Controls	1	LS		$ -
9-8	Silt Fence	500	LF		$ -
9-9	Construction Entrance (Coarse Aggregate, ALDOT Number 1)	4	EA		$ -

9-10	Inlet Protection (Wattles)	600	EA		$ -
9-11	18" Roadway Pipe (Class 3 R.C.)	529	LF		$ -
9-12	Junction Boxes, Type 1	2	EA		$ -
9-13	Inlets, Type S3 (1 Wing)	1	EA		$ -
9-14	Inlets, Type S3 (2 Wing)	3	EA		$ -
9-15	Inlets, Type B (Surface Grates)	3	EA		$ -
9-16	Inlets, Type E (Modified) (C.O.H. Standard Curb Inlet)	4	EA		$ -
9-17	Manhole Covers Reset (Storm)	5	EA		$ -
9-18	10" Thick, Crushed Aggregate Base Course, Type B, Plant Mixed, (Installed in 2-5" Lifts) (Materials placed outside of Paving Limits will not be measured for payment)	3,350	SY		$ -

9-19	5" Thick, Crushed Aggregate Base Course, Type B, Plant Mixed	2,940	SY		$ -
9-20	Bituminous Treatment A, Prime Coat, (0.10 gal/syd)	630	GAL		$ -
9-21	Tack Coat (.07 gal/syd)	450	GAL		$ -
9-22	1" Thick, Superpave Bituminous Concrete Wearing Layer, 1/2" Max. Aggregate Size, ESAL Range C/D, (112 lb/syd)	200	TN		$ -
9-23	1.25" Thick, Superpave Bituminous Concrete Wearing Layer, 1/2" Max. Aggregate Size, ESAL Range C/D, (140 lb/syd)	300	TN		$ -
9-24	2.27" Thick, Superpave Bituminous Concrete Upper Binder Layer, 1" Max. Aggregate Size, ESAL Range C/D, (250 lb/syd)	450	TN		$ -
9-25	2" Thick, Superpave Bituminous Concrete Upper Binder Layer, 1" Max. Aggregate Size, ESAL Range C/D, (220 lb/syd)	350	TN		$ -

9-26	Plain Cement Concrete Pavement (Modified), 6" Thick	71	SY		$ -
9-27	Concrete Sidewalk, 4" Thick (Includes 4" Thick Stone Leveling Layer)	1,100	SY		$ -
9-28	Concrete Gutter (Req'd @ Landings)	160	LF		$ -
9-29	Concrete Gutter (Valley)	125	LF		$ -
9-30	Concrete Curb, Type D (6" x 16" Stand-up curb)	150	LF		$ -
9-31	Combination Curb & Gutter, Type C (Modified) (18" Gutter)	3,300	LF		$ -
9-32	Handicap Ramps with ADA Detectable Warning Pavers	18	EA		$ -
9-33	Manhole Covers Reset (Sanitary)	5	EA		$ -
9-34	Sanitary Sewer TVI & Pressure Testing	1	LS		$ -

9-35	Set New Sectionalizing Cabinet Base (Contractor to Provide Labor Stone and all Incidentals)	3	EA		$ -
9-36	5" PVC Conduit (Contractor to Provide Labor Concrete for Elbows and All Incidentals)	200	LF		$ -
9-37	Relocate Library Parking Lot Lights with New Foundations	3	EA		$ -
9-38	#2 Triplex 600V UG Cable Furnish and Install	2,000	LF		$ -
9-39	Quazite Box 12" x 12"	7	EA		$ -
9-40	2", Non-Metallic Conduit to Include Fittings and All Incidentals	300	LF		$ -
9-41	Furnish and Install 250W HPS Parking Lot Light Assembly (Suggs Center) to Include Fixture, Pole, Foundation and all Appurtenances	4	EA		$ -
9-42	#2 Triplex 600V UG Cable Furnish and Install	700	LF		$ -
9-43	Quazite Box 12" x 12"	6	EA		$ -

9-44	Solid White, Class 2, Type A Traffic Stripe (12" Wide Thermoplastic)	190	LF		$ -
9-45	Solid White, Class 2, Type A Traffic Stripe (24" Wide Thermoplastic)	250	LF		$ -
9-46	Traffic Control Markings, Class 2, Type A	50	SF		$ -
9-47	Class 1, Type B, Paint Striping (Parking Lot Areas)	1,100	LF		$ -
9-48	Class 2, Aluminum Flat Sign Panels 0.04" Thickness (Type III Background)	50	SF		$ -
9-49	Furnish and Install Temporary Traffic Control	1	LS		$ -
9-50	Roundabout Traffic Island complete-in-place to include curbs, handicap ramps, sidewalk, stamped concrete to match existing islands and all incidentals	1	LS		$ -
	TOTAL Option No. 9				$0.00

Option No. 10: Mill and Overlay St. Clair Pavement (Harvard Road to Gallatin Street)

10-1	Mobilization	1	LS		$ -
10-2	Planing Existing Pavement (1.50" Depth)	3,500	SY		$ -
10-3	Tack Coat (0.07 gal/syd)	250	GAL		$ -
10-4	1.50" Thick, Superpave Bituminous Concrete Wearing Layer, 1/2" Max. Aggregate Size, ESAL Range C/D, (165 lb/syd)	350	TN		$ -
10-5	Broken Yellow, Class 2, Type A Traffic Stripe (4" Wide)	1,900	LF		$ -
10-6	Solid Yellow, Class 2, Type A Traffic Stripe (4" Wide)	1,900	LF		$ -
10-7	Temporary Striping (All Colors) (4" Wide)	1,900	LF		$ -
10-8	Temporary Marking	80	SF		$ -
10-9	Traffic Control Markings and Legends, Class 2, Type A	325	SF		$ -

10-10	Furnish and Install Temporary Traffic Control	1	LS		$ -
10-11	Replace Existing Concrete Sidewalk, 4" Thick (Includes 4" Stone Leveling Layer)	50	SY		$ -
10-12	Replace Existing Combination Curb and Gutter, Match Existing	150	LF		$ -
	TOTAL Option No. 10				$0.00

	Option No. 11: Milling & Repave for Davis Court Pelham Ave				
11-1	Mobilization	1	LS		$ -
11-2	Tack Coat (0.07 gal/syd)	175	GAL		$ -
11-3	Planing Existing Pavement (1.25" Depth)	1,750	SY		$ -
11-4	1.25" Thick, Superpave Bituminous Concrete Wearing Layer, 1/2" Max. Aggregate Size, ESAL Range C/D, (140 lb/syd)	140	TN		$ -

11-5	Furnishing and Installing Temporary Traffic Control	1	LS		$ -
11-6	Replace Existing Concrete Sidewalk, 4" Thick (Includes 4" Stone Leveling Layer)	100	SY		$ -
11-7	Replace Existing Combination Curb and Gutter, Match Existing	200	LF		$ -
	TOTAL Option No. 11				$0.00

Option No. 12: DUMPSTER ENCLOSURE

12-1	Mobilization	1	LS		$ -
12-2	New Heavy Duty Concrete Slab for Garbage Truck	420	SF		$ -
12-3	New Concrete Dumpster Pad Ramp	60	SF		$ -
12-4	New Dumpster Gates	1	LS		$ -
12-5	New Screen Wall for Dumpster Enclosure	13	LF		$ -

	TOTAL Option No. 12				**$0.00**
	~~**Option No. 13**~~				
~~**13-1**~~	~~**Additional Cost to Upgrade Specified Planter Soil to CU Structural Soil**~~	~~**320**~~	~~**CYD**~~	~~**$ -**~~	~~**$ -**~~
	~~**TOTAL Option No. 13**~~				~~**$0.00**~~
	Option No. 14				
14-1	**Digital As-Builts (Alabama Registered Land Surveyor Stamped)**	**1**	**LS**		**$ -**
	TOTAL Option No. 14				**$0.00**

	Option No. 15				
15-1	Contractor retained Construction Trailer Type 2 with Climate Control to include installation, maintenance and removal. Trailer shall be furnished with sanitary sewer, water, electricity and weekly cleaning service. Contractor is responsible for all fees, permits and utilities for the project duration.	12	Month		$ -
	TOTAL Option No. 15				**$0.00**

ALL ITEMS SHALL BE CONSIDERED IN-PLACE. PRICES SHALL INCLUDE ALL LABOR, EQUIPMENT,MATERIALS, AND REMOVALS AS REQUIRED FOR CONSTRUCTION OF THE REQUIRED WORK.

COMPANY_____

SIGNATURE_____

DATE_____

Clarification to Options Mislabeled in Plans

- On Sheet 1H where it states "Options 7 & 10" for St. Clair Ave. east of Harvard Road, it should state Option 8. Where it states "Option 11," should state Option 9.

- On Sheet 1I on east side of the bridge or the bottom of the revision cloud, the note that says "Option 2," should state Option 1. The note for the revision cloud area around the dumpster that states "Option 9," should state Option 12.

- On Sheet 4 where it states "Option 7 & 10" for St. Clair Ave west of Harvard Road, it should state Option 8. Where it states "Option 11," it should state Option 9. The note found in the profile on Sheet 4 that states "If Option 1..." should state Option 8.

- On Sheet 16A the note in the top right hand corner that states "Option 15," should state Option 9.

- On Sheet 17 the sheet title that states "Option 7 Taken," should state "Option 9 Taken." Also, the note in the top right hand corner states "Option 7," should state Option 9.

- On Sheet 18 the sheet title that states "Option 7 Not Taken," should state "Option 8 Not Taken." The option arrows on the right side of the page that state "Option 7," should state "Option 8." The note in the bottom left corner that states "Option 17," should state "Option 8."

- On Sheet 18A the sheet title that states "Option 7 Taken," should state "Option 8 Taken." The option arrows on the right side of the page that state "Option 7," should state "Option 8." The note in the bottom left corner that states "Option 17," should state "Option 8." Option 8 Note should also state as follows, "Demolition for Option 8 is to include the removal of paving and base as needed for the installation of storm sewer in Saint Clair Avenue as shown on Sheets 59A, 60A, and 61A. Saw-cut asphalt at edge of area to be removed(TYP)."

- On Sheet 19 the sheet title states "Option 7 Not Taken," should state "Option 8 Not Taken." The note below the drawing that states "Option 7," should state Option 8.

- On Sheet 19A the sheet title that states "Option 7 Taken," should state "Option 8 Taken." The note below the drawing that states "Option 7," should state Option 8.

- On Sheet 38A the note that states "No utilities between stations 11+50 and 21+50" shall be omitted, and does not apply.

- On Sheet 44 where it states "Option 1," it should state "Option 9." On the left side of the sheet where it states "Option 2," it should state "Option 8." The reference to "Option 4" shall be disregarded and does not apply.

- On Sheet 44A the portion of the sheet title that states "Option 4 Not Taken" shall be disregarded as this work is included in "Base Bid." On the right side of the sheet where it states "Option 1," it should state "Option 9." On the left side of the sheet where it states "Option 2," it should state "Option 8." The reference to "Option 4" shall be disregarded and does not apply.

- On Sheet 49 the note on the bottom of the page that states "Option 15," should state "Option 9."

- On Sheet 49A the note on the bottom of the page that states "Option 15," should state "Option 9."

- On Sheet 50 the note on the bottom of the page that states "Option 15," should state "Option 9."

LIGHTING PLAN SHEET (OPTION 3)

STATE	REFERENCE PROJECT NO	FISCAL YEAR	SHEET NO	LAST SHEET NO
AL	85-11-RD03	2014	380	92

CONTRACT ID NO:

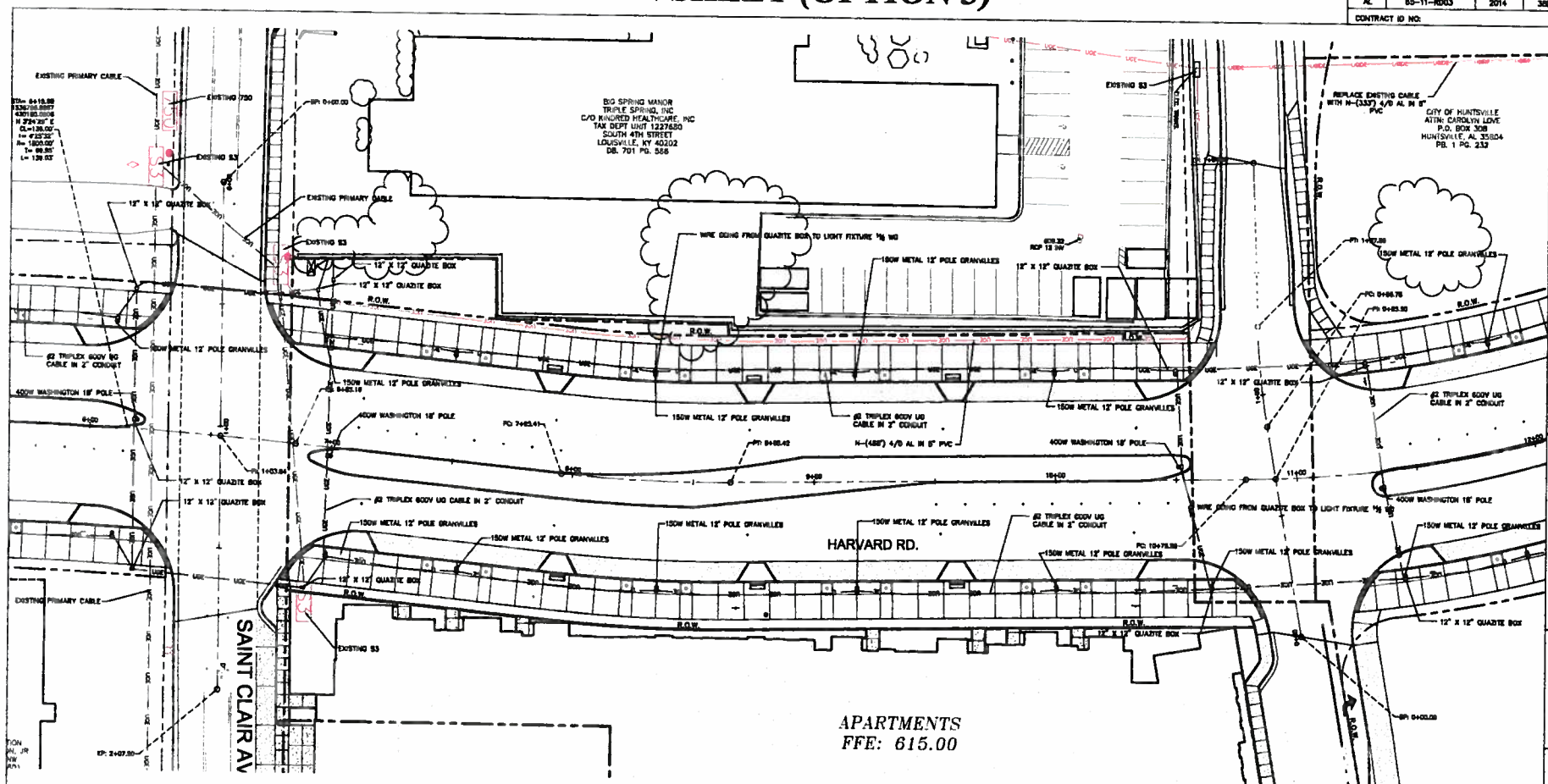

400W WASHINGTON 18' POLE (BREAKAWAY POLE BASE REQUIRED FOR LIGHTS IN MEDIAN)

150W METAL 12' POLE GRANVILLES (ALL BASE COVERS MUST HAVE SECURITY SCREW)

12" X 12" QUAZITE BOX

#2 TRIPLEX AL STREET LIGHT CABLE IN 2" PVC

LIGHTING PLAN SHEET LAYOUT
COORDINATE WITH HUNTSVILLE UTILITIES.

NOTE: ALL BASES FOR THE LIGHT POLES TO BE LOCKED WITH KEY. THE 12 FOOT GRANVILLE FACING APARTMENTS ARE TO HAVE A SIDE SHIELD. (PAYMENT FOR LIGHT SHIELD INCIDENTAL TO LIGHT FIXTURE)

SCALE 1" = 20'

SHEET TITLE
LIGHTING SHEET

ROUTE
HARVARD ROAD

RESPONSIBLE P.E.: JERRY M. CARDLE, PE — DATE: 6-5-14
SUPERVISOR: JERRY M. CARDLE, PE — DATE: 6-5-14
DESIGNER: JACKIE L. WHITAKER — DATE: 6-5-14
PLAN SUBMITTAL — PLAN-IN-HAND

STE INCORPORATED
7500 S. MEMORIAL PKWY
SUITE 101
HUNTSVILLE, AL 35802
OFFICE: 256-539-1221
FAX: 256-539-1220

5-23-14 DRAWN BY: J. WHITAKER P-11-049 DOWNTOWN GATEWAY BASE

Add 1 - Pg 51 of 56 - 08/14/14

LIGHTING PLAN SHEET (OPTION 3)

STATE	REFERENCE PROJECT NO	FISCAL YEAR	SHEET NO	LAST SHEET NO
AL	85-11-R003	2014	38E	92

CONTRACT ID NO:

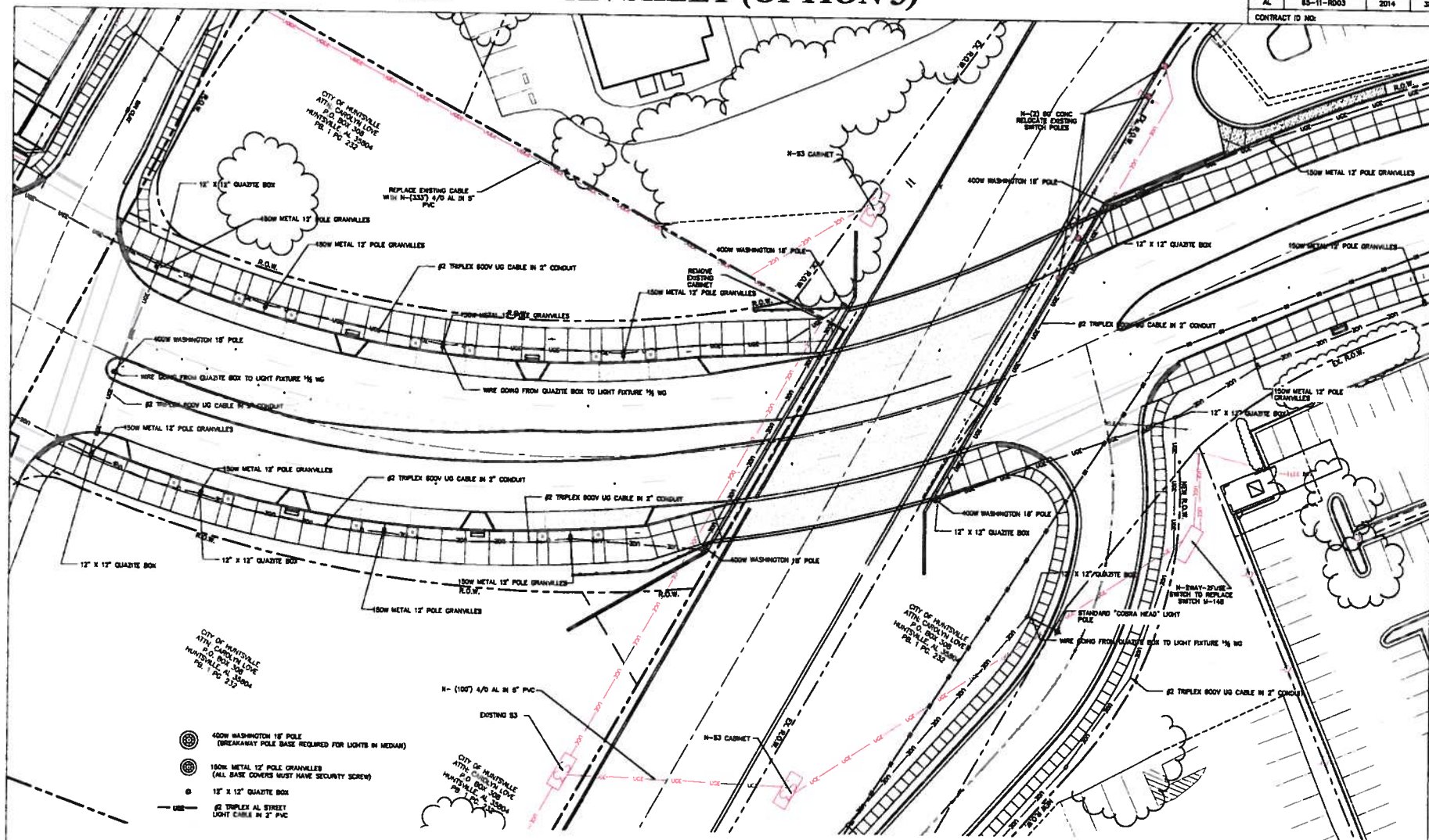

NOTE: ALL BASES FOR THE LIGHT POLES TO BE LOCKED WITH KEY. THE 12 FOOT GRANVILLE FACING APARTMENTS ARE TO HAVE A SIDE SHIELD. (PAYMENT FOR LIGHT SHIELD INCIDENTAL TO LIGHT FIXTURE)

LIGHTING PLAN SHEET LAYOUT
COORDINATE WITH HUNTSVILLE UTILITIES.

SCALE: 1" = 20'

SHEET TITLE
LIGHTING SHEET

ROUTE
HARVARD ROAD

RESPONSIBLE P.E.: JERRY M. CARGILE, PE — DATE: 6-5-14
SUPERVISOR: JERRY M. CARGILE, PE — DATE: 6-5-14
DESIGNER: JACKIE L. WATAKER — DATE: 6-5-14
PLAN SUBMITTAL: PLAN-IN-HAND

7500 S. MEMORIAL PKWY
SUITE 200
HUNTSVILLE, AL 35802
OFFICE: 256-539-1221
FAX: 256-539-1220
INCORPORATED

6-22-14 DRAWN BY: J. WATAKER P-11-049 DOWNTOWN GATEWAY BASE

OPTIONS PLAN SHEET

STATE	REFERENCE PROJECT NO	FISCAL YEAR	SHEET NO	LAST SHEET NO
AL	85-11-RD03	2014		

CONTRACT ID NO:

ADD OPTIONS

- OPTION 1: INSTALLATION OF BRIDGE
- OPTION 2: INSTALLATION OF BASE PAVE AND SIGNAL
- OPTION 3: INSTALLATION OF STREET LIGHTS
- OPTION 4: INSTALLATION OF STREETSCAPE
- OPTION 5: INSTALLATION OF LANDSCAPE AND IRRIGATION
- OPTION 6: INSTALLATION OF BASELINE CONTROLLERS FOR IRRIGATION SYSTEM IN LIEU OF RAIN BIRD CONTROLLERS
- OPTION 7: DEMO AND REPLACE ST. CLAIR AVE PAVEMENT(HARVARD RD TO GALLATIN ST.
- OPTION 8: DEMO EXISTING STORM ALONG ST. CLAIR AVENUE AS NOTED ON SHEETS 18A AND 19A. INSTALL NEW STORM SEWER AS DETAILED ON SHEETS 59A, 60A, AND 61A.
- OPTION 9: DAVIS CT. CUL-DE-SAC TO HEART OF HUNTSVILLE ROUNDABOUT & HUNTSVILLE/MADISON COUNTY PUBLIC LIBRARY PARKING MODIFICATIONS.
- OPTION 10: MILL AND OVERLAY EXISTING SAINT CLAIR AVENUE PAVEMENT FROM HARVARD ROAD TO GALLATIN STREET.
- OPTION 11: MILLING AND REPAVE DAVIS CT./PELHAM AVE.
- OPTION 12: INSTALLATION OF NEW DUMPSTER ENCLOSURE AS SHOWN ON SHEET 11.
- OPTION 13: SUBSTITUTE MODIFIED PLANTER SOIL SPECIFICATION DETAILS ON SHEET FOR THE STRUCTURAL SOIL SPEC SHOWN ON SHEET.
- OPTION 14: DIGITAL AS-BUILTS(ALABAMA REGISTERED LAND SURVEYOR STAMPED)
- OPTION 15: CONSTRUCTION TRAILER

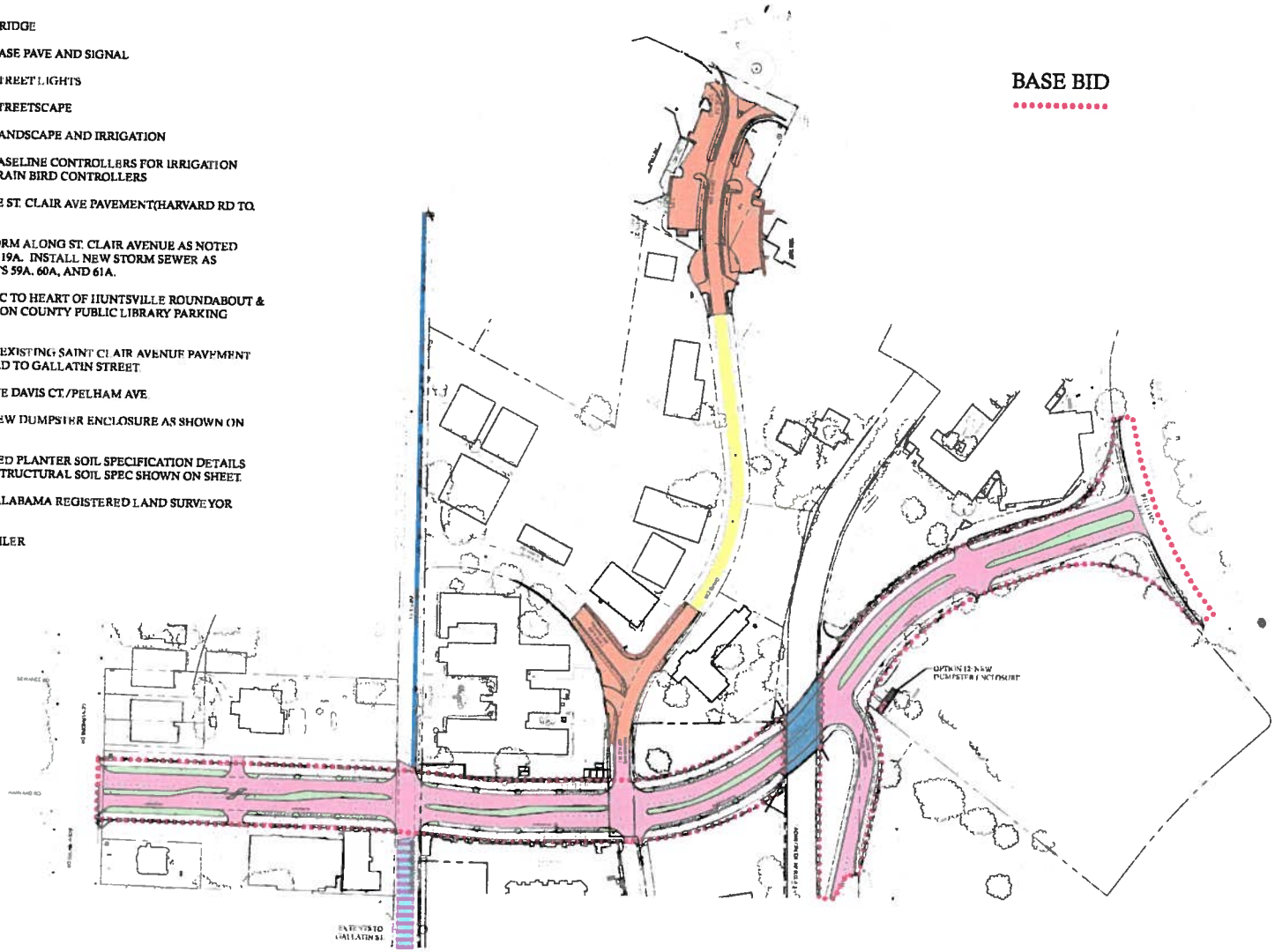

RESPONSIBLE P.E.: JERRY M. CARGILE, PE	DATE: 6-5-14
SUPERVISOR: JERRY M. CARGILE, PE	DATE: 6-5-14
DESIGNER: JACKIE L. WHITAKER, P.E.	DATE: 6-5-14
PLAN SUBMITTAL	PLAN-IN-HAND

SITE INCORPORATED
7500 S MEMORIAL PKWY
SUITE 209
HUNTSVILLE, AL 35802
OFFICE: 256-539-1220
FAX: 256-539-1223

SHEET TITLE
OPTIONS SHEET

ROUTE
HARVARD ROAD

Add 1 - Pg 53 of 56 - 08/14/14

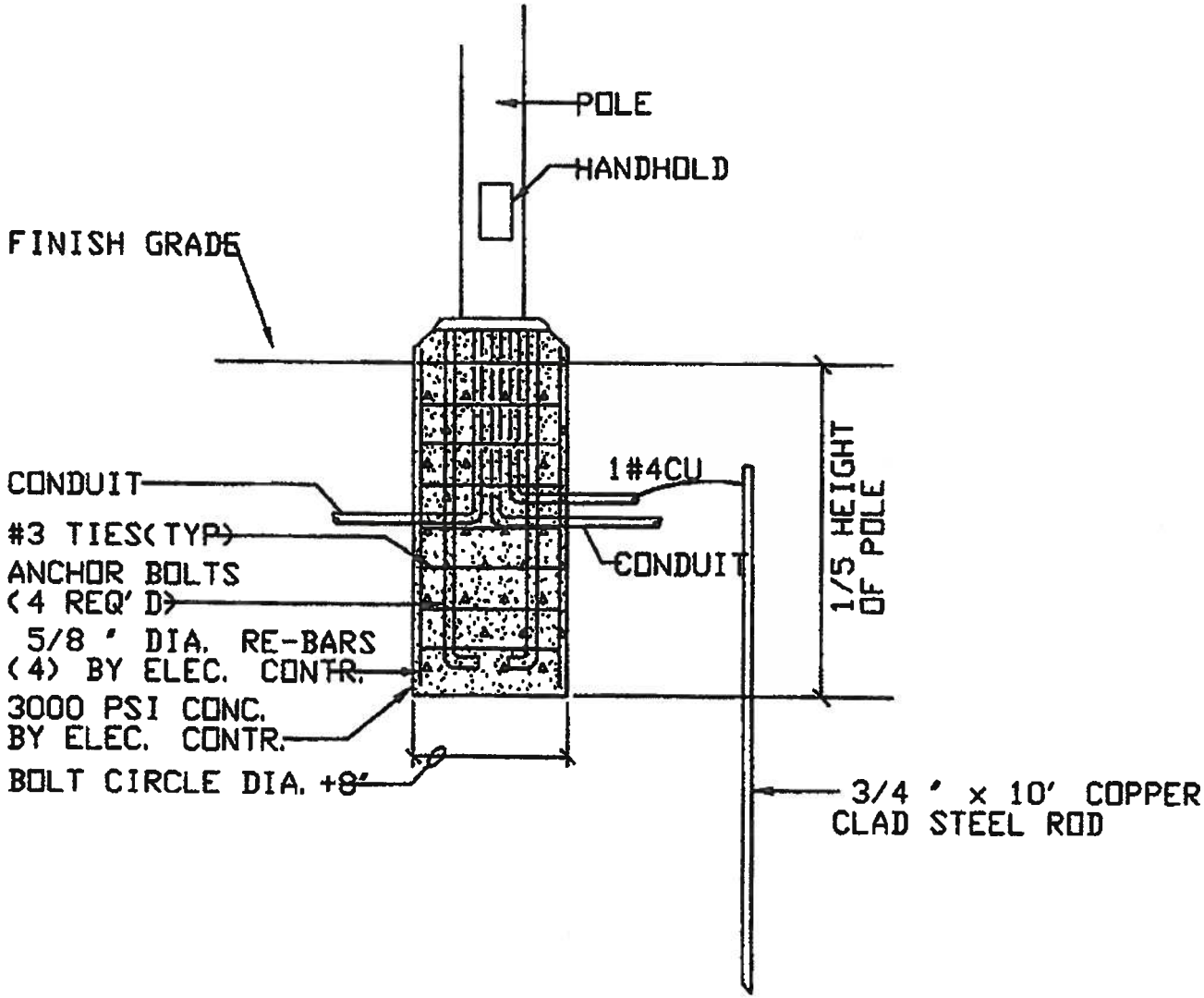

DETAIL – POLE BASE

NO SCALE

(Huntsville- Courthouse Square)

DETAIL
ELECTRICAL SERVICE EQUIPMENT PEDESTAL
NO SCALE

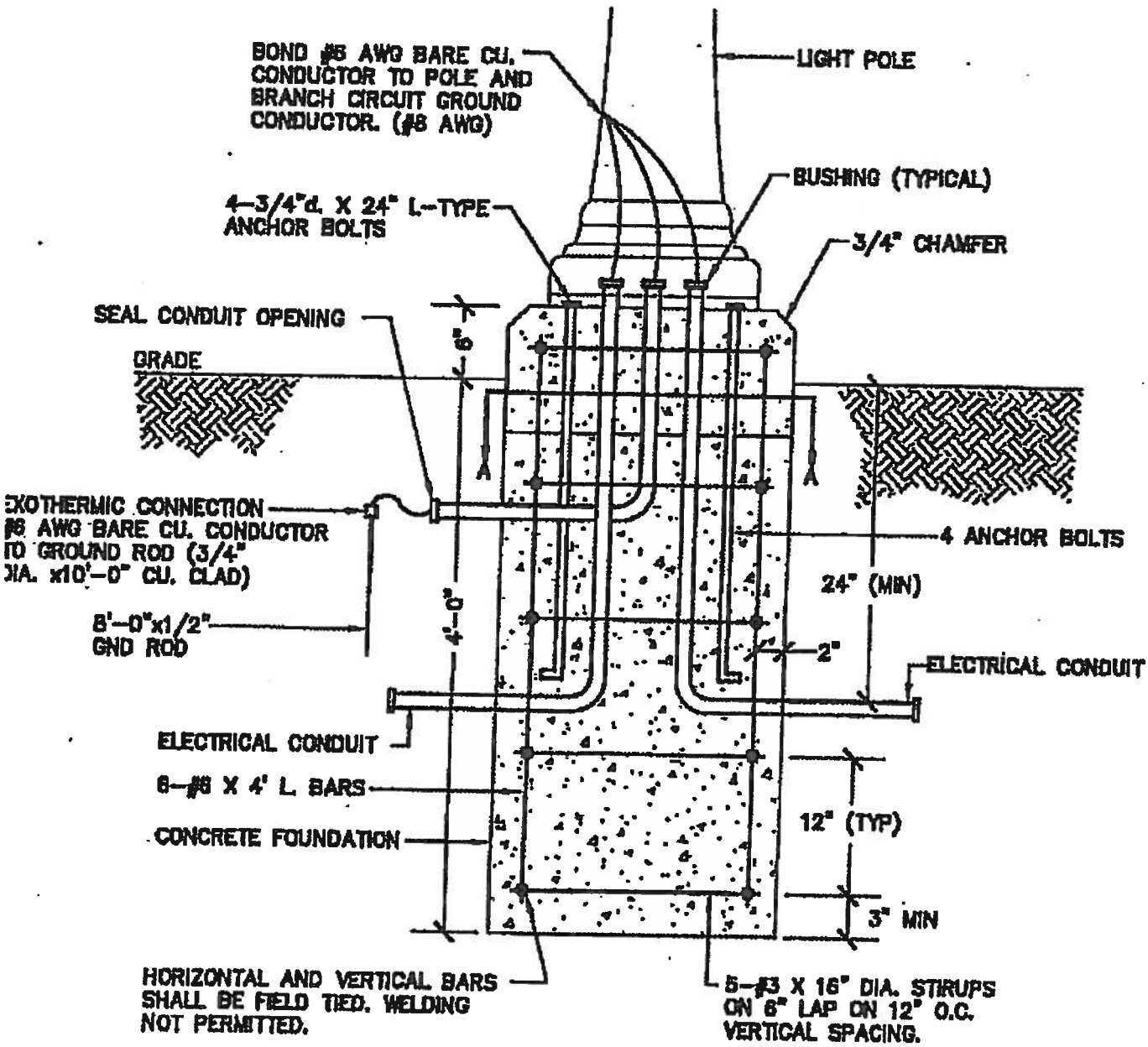

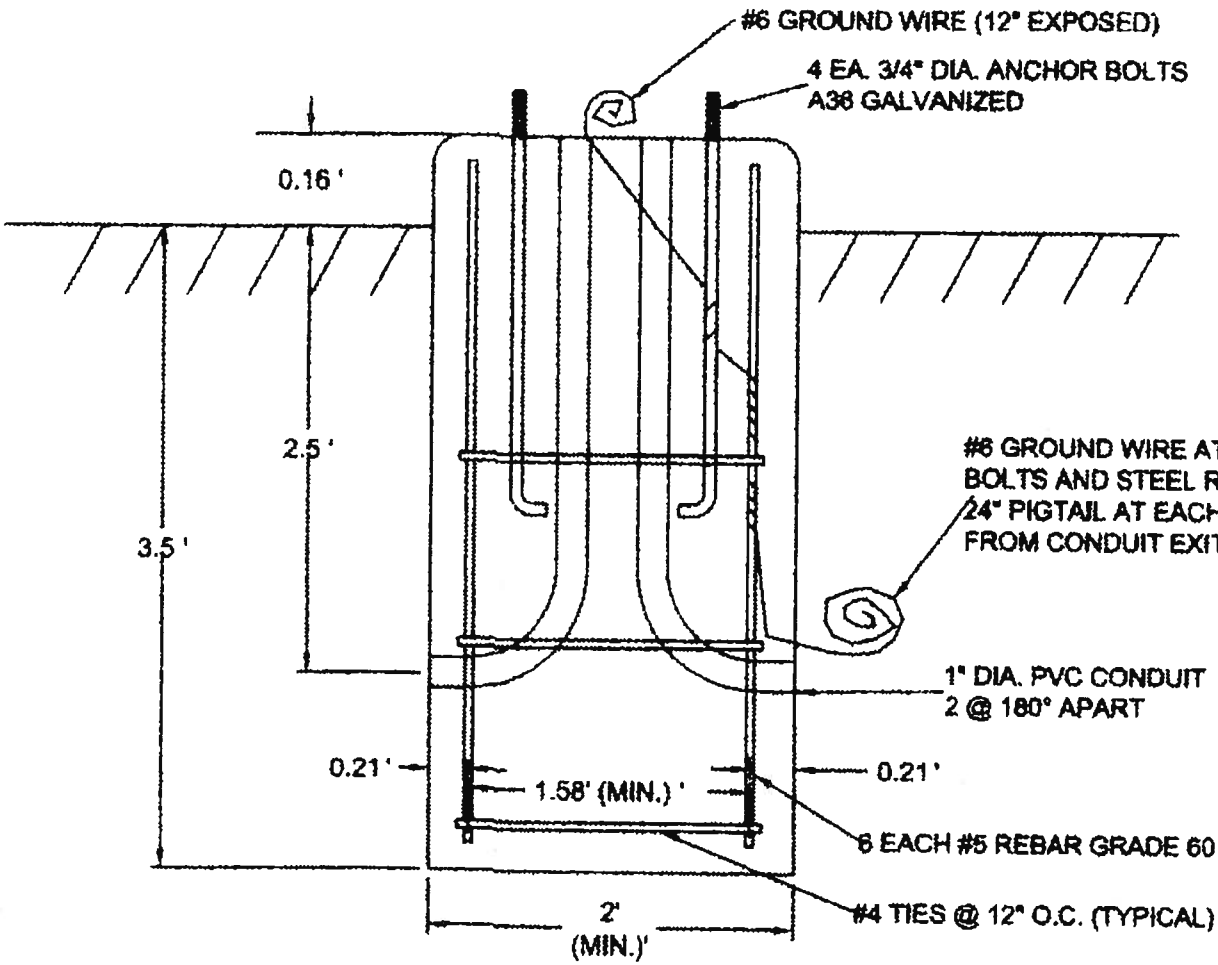

NOTES:

1. BOLT CIRCLE DIAMETER TO BE DETERMINED BY MANUFACTURER.
2. CONCRETE SHALL BE 3,000 PSI, 28 DAY COMPRESSIVE STRENGTH.
3. SMOOTH FINISH REQUIRED ON CONCRETE FIXTURE BASE ON TOP & 4" DOWN THE SIDE WITH ROUNDED EDGES

DETAIL - FIXTURE BASE

NOT TO SCALE

CERTIFICATION OF COMPLIANCE WITH TITLE 39, CODE OF ALABAMA

In accordance with Code of Alabama (1975) §39-5-1(b), I hereby certify that the contract with Wiregrass Construction Company, Inc., in the amount of TWO MILLION SEVENTY-THREE THOUSAND SEVEN HUNDRED FIFTY AND .63/100 DOLLARS ($2,073,750.63), for Downtown Gateway (aka Harvard Road Extension)-REBID, Base Bid, Project No. 65-11-RD03, which is being submitted to the City Council of the City of Huntsville for approval on this the 14th day of August, 2014, has been let in accordance with Code of Alabama, Title 39 and all other applicable provisions.

Kathy Martin
Director of City Engineering
City of Huntsville

E-VERIFY – NOTICE

The Beason-Hammon Alabama Taxpayer and Citizen Protection Act, Act No. 2011-535, Code of Alabama (1975) § 31-13-1 through 31-13-30 (also known as and hereinafter referred to as " the Alabama Immigration Act") as amended by Act No. 2012-491 on May 16, 2012 is applicable to all competitively bid contracts with the City of Huntsville. As a condition for the award of a contract and as a term and condition of the contract with the City of Huntsville, in accordance with § 31-13-9 (a) of the Alabama Immigration Act, as amended, any business entity or employer that employs one or more employees shall not knowingly employ, hire for employment, or continue to employ an unauthorized alien within the State of Alabama.

During the performance of the contract, such business entity or employer shall participate in the E-Verify program and shall verify every employee that is required to be verified according to the applicable federal rules and regulations. The business entity or employer shall assure that these requirements are included in each subcontract in accordance with §31-13-9(c). Failure to comply with these requirements may result in breach of contract, termination of the contract or subcontract, and possibly suspension or revocation of business licenses and permits in accordance with §31-13-9 (e) (1) & (2).

Code of Alabama (1975) § 31-13-9 (k) requires that the following clause be included in all City of Huntsville contracts that have been competitively bid and is hereby made a part of this contract:

"By signing this contract the contracting parties affirm, for the duration of the agreement, that they will not violate federal immigration law or knowingly employ, hire for employment, or continue to employ an unauthorized alien within the State of Alabama. Furthermore, a contracting party found to be in violation of this provision shall be deemed in breach of the agreement and shall be responsible for all damages resulting therefrom."

Wiregrass Construction Company, Inc.
(Company)

BY: _____
(Authorized Representative)