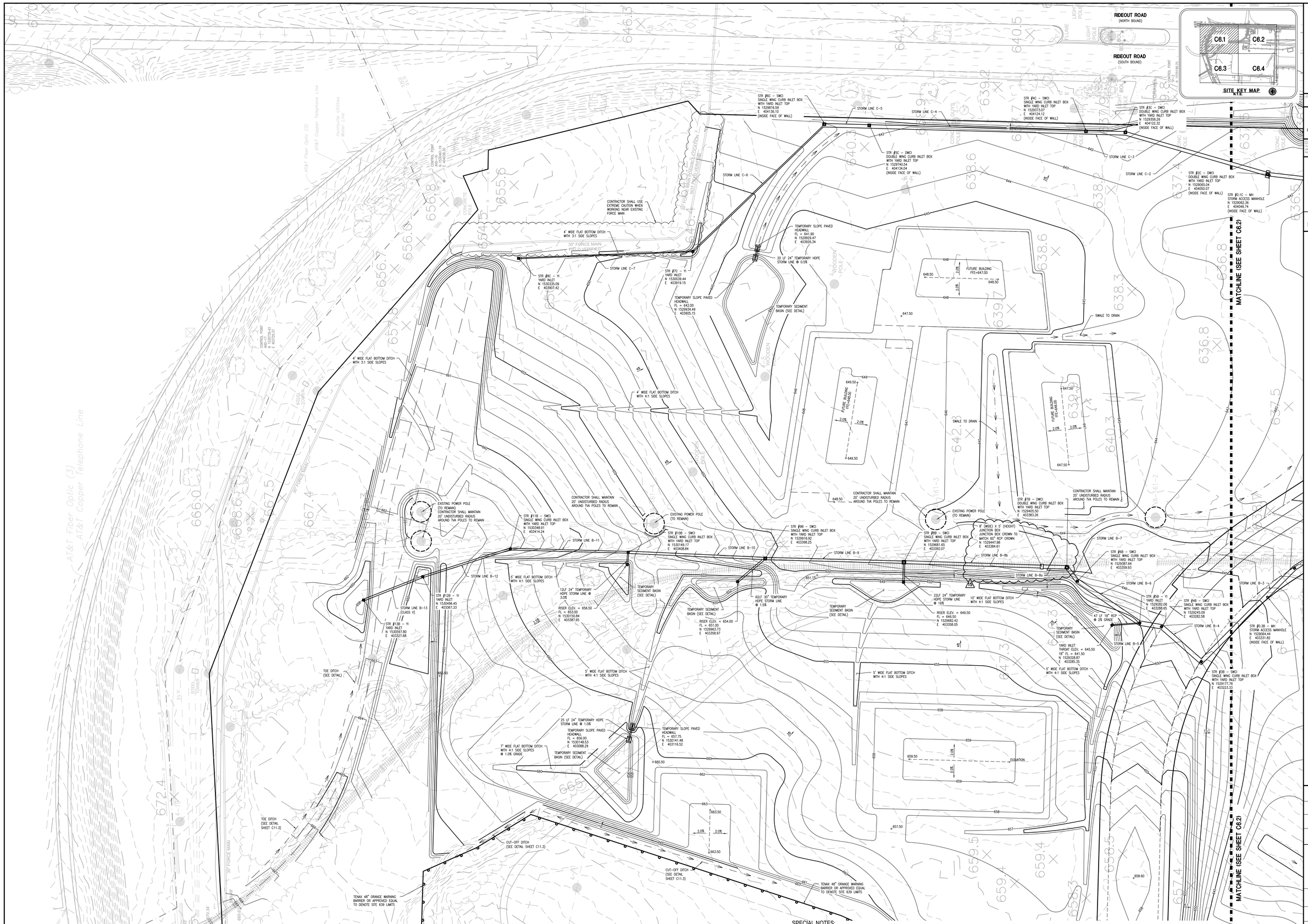

SPECIAL NOTES:

1. SEE SHEET C1.0 FOR ALL APPLICABLE PROJECT GENERAL NOTES.
2. NO CURB INLET TOPS SHALL BE INSTALLED IN THIS PACKAGE EXCEPT WHERE ASPHALT PAVING IS ADJACENT AND CURBING IS INSTALLED. ALL INLET BOXES SHALL HAVE TEMPORARY YARD INLET TOPS. SILT SAVERS OR APPROVED EQUAL INLET PROTECTION SHALL BE INSTALLED UNTIL SITE IS STABILIZED.
3. CONTRACTOR SHALL USE EXTREME CAUTION WHEN WORKING NEAR THE EXISTING OVERHEAD POWER LINES AND POLES AND PROVIDE A 20' RADIUS OF UNDISTURBED EARTH AROUND EACH POLE.
4. SEE TVA NOTES SHEET C1.0 FOR GRADING REQUIREMENTS ALONG POLE LINE.
5. SEE SHEET C10.0 FOR ALL STORM PROFILES. PIPES NOT PROFILED HAVE DESIGN INFORMATION SHOWN ON SHEETS C6.1 TO C6.4.
6. SEE SHEETS C5.0 TO C5.3 FOR ROADWAY PROFILES AND TYPICAL SECTIONS.
7. ALL HDPE STORM PIPES SHALL BE SMOOTH LINED HIGH DENSITY POLYETHYLENE (HDPE) WITH WATER-TIGHT JOINTS UNLESS OTHERWISE NOTED, INSTALL PER MANUFACTURER'S RECOMMENDATIONS.

0 25 50 100
SCALE 1" = 50'

REV	DATE	DRAWN	CHECKED	DESCRIPTION
15	7/22/11	TBE	TAG	ADDED JUNCTION BOX
11	6/15/11	TBE	TAG	GRADING REVISIONS
10	6/7/2011	TBE	TAG	GRADING REVISIONS
5	4/27/11	TBE	TAG	STORM ACCESS MANHOLES
2	2/4/2011	TBE	TAG	STORM REVISIONS

TRAFFIC	PUBL. EDOC. REVIEW	FF	DRAINAGE

DATE 12/16/2010

Checked By RAN

Drawn By BSJ

Sheet Number C6.1

Sheet 19 of 44

MASS GRADING AND STORM DRAINAGE PLAN

REDSTONE GATEWAY - PACKAGE 1A

CITY OF HUNTSVILLE

HUNTSVILLE, ALABAMA

LBYD
Civil and Structural Engineers
Atlanta, Georgia
Birmingham, Alabama
Huntsville, Alabama
www.lbyd.com

LBYD Project Number 302-10-002A

LBYD, Inc.
305 Church Street SW
Suite 719
Huntsville, AL 35801
Phone (256) 533-1575
Fax (256) 533-1744

© copyright 2010
These drawings and design intent are the sole property of the City of Huntsville which may not be reproduced without written permission.

ALABAMA REGISTERED No. 26754 PROFESSIONAL ENGINEER
7/22/2011

HUNTSVILLE
The Heart of Alabama

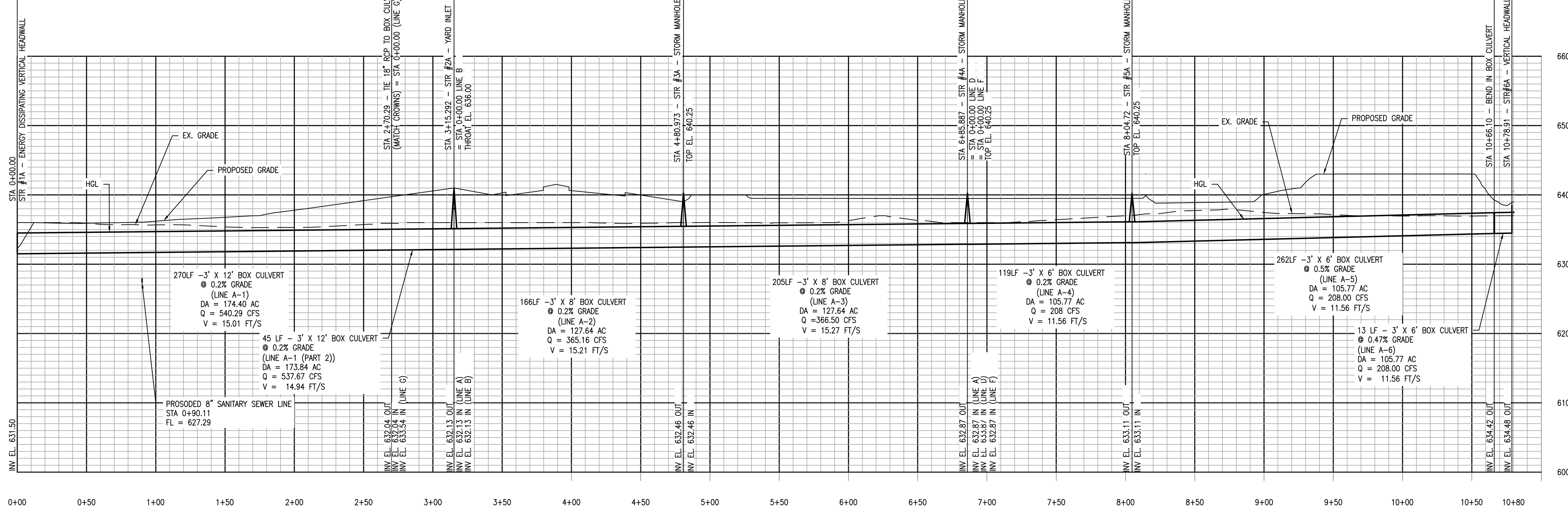

LINE A

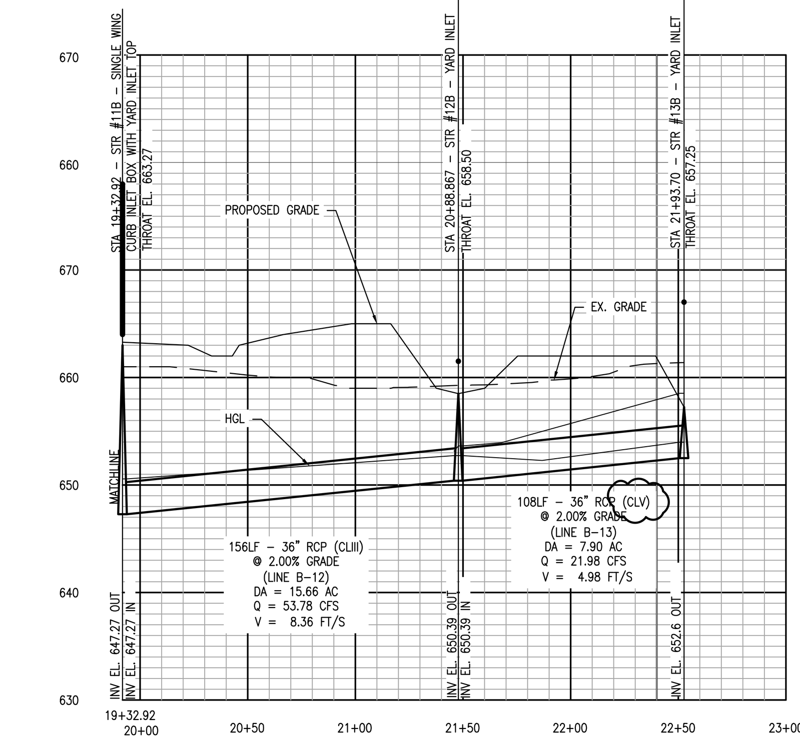

LINE B (CONTINUED)

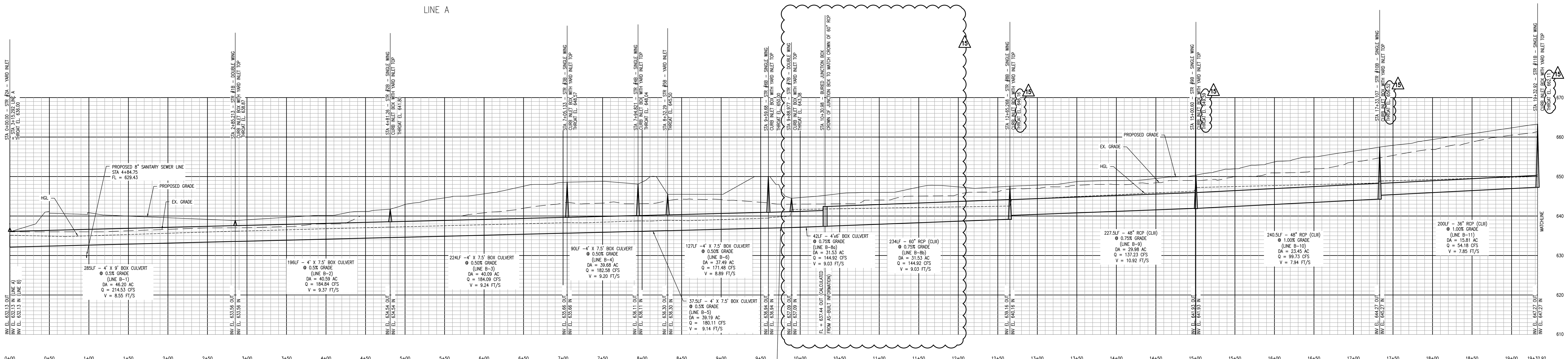

LINE B

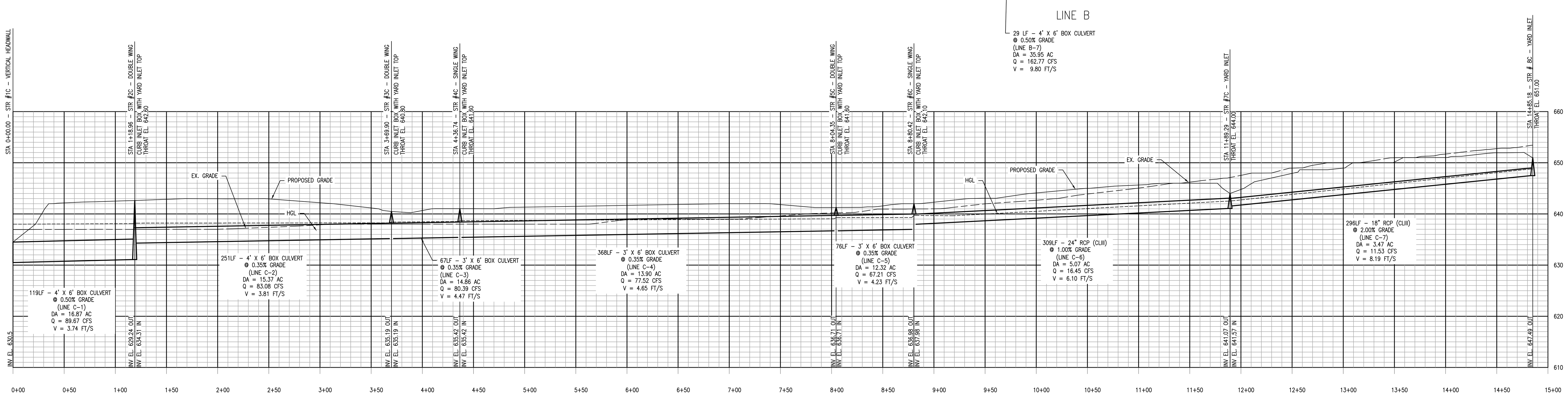

LINE C

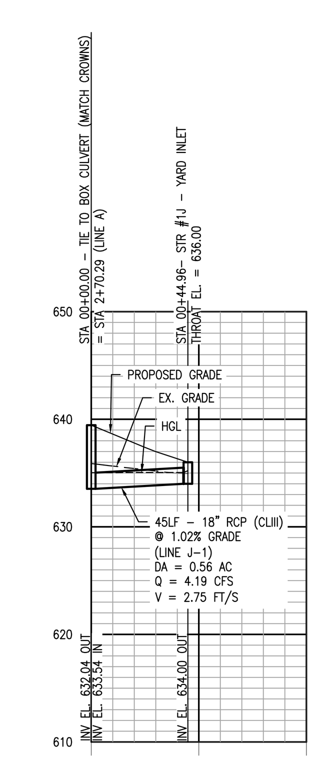

LINE J

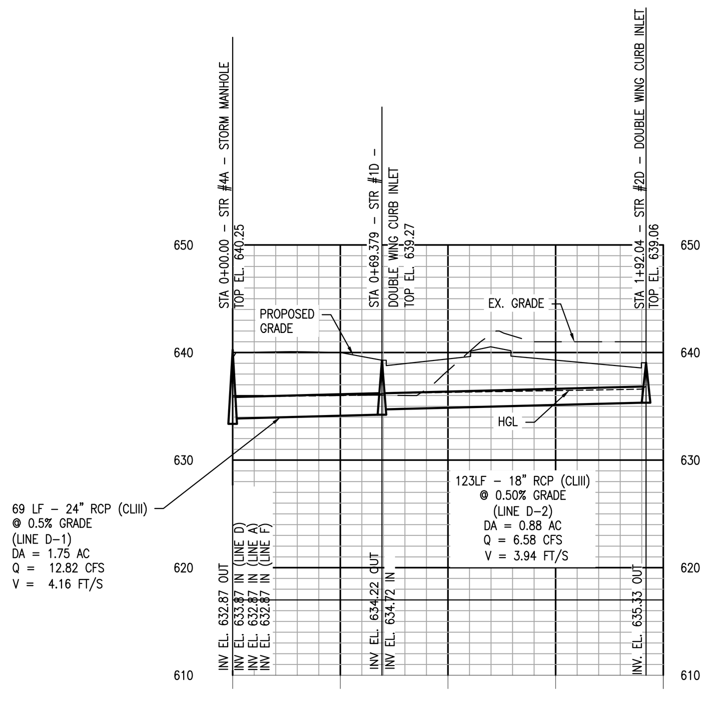

LINE D

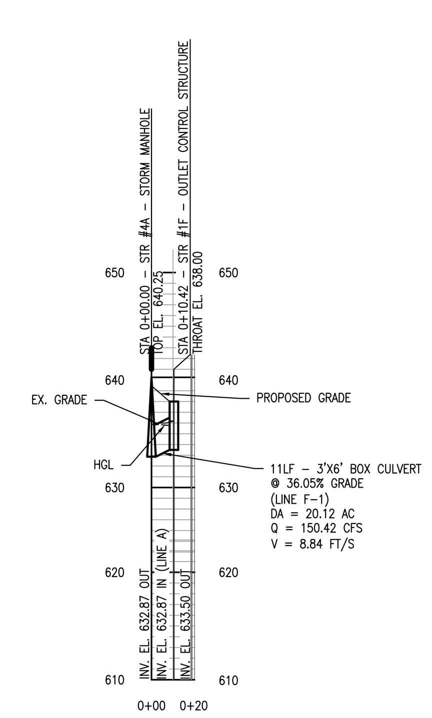

LINE F

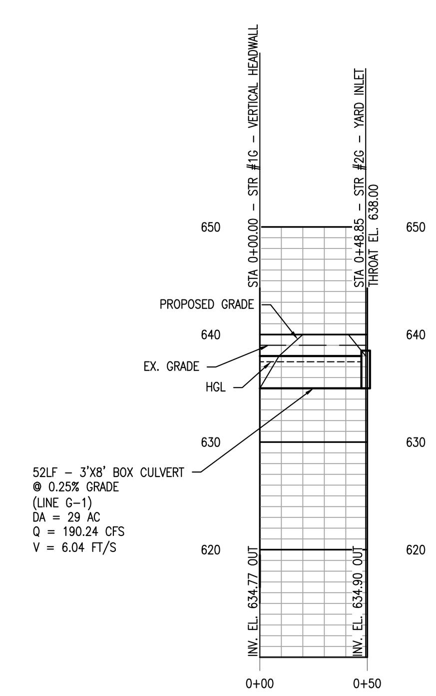

LINE G

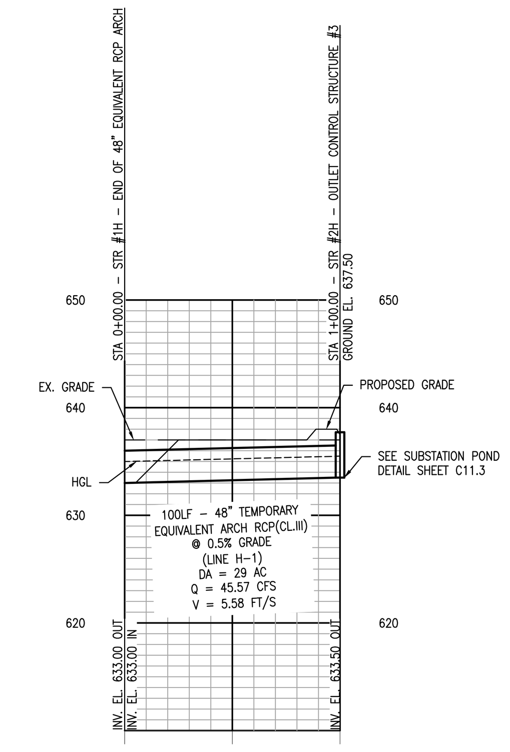

LINE H

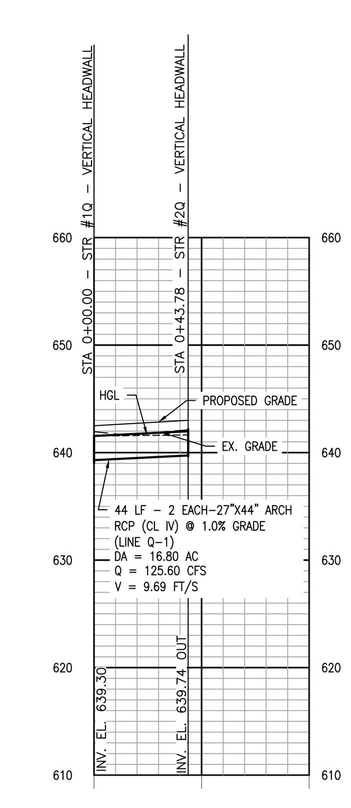

STORM LINE Q

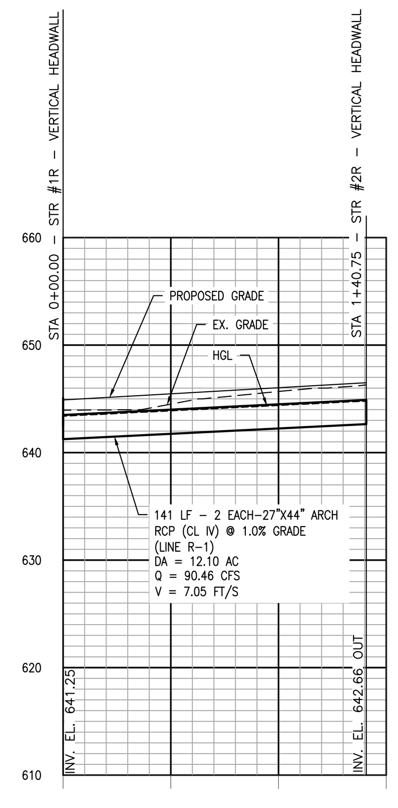

STORM LINE R

SPECIAL NOTES:

1. PIPES SIZED FOR THE -25YR STORM EVENT.
2. SEE SHEETS C6.1 TO C6.4 FOR STORM PIPE LAYOUT INFORMATION AND GRADING.
3. INSTALL STORM LINE Q AND R WITH 18" SPACING BETWEEN PIPES.

SCALE:
1"=50' HORIZONTAL
1"=10' VERTICAL

HGL	- - - - - - - -
EXISTING GRADE	— — — —
PROPOSED GRADE	————
STORM SEWER	————

LBYD
Civil and Structural Engineers
Atlanta, Georgia
Birmingham, Alabama
Huntsville, Alabama
www.lbyd.com

LBYD Project Number 302-10-002A

LBYD, Inc.
305 Church Street SW
Suite 719
Huntsville, AL 35801
Phone (256) 533-1575
Fax (256) 533-1744

© copyright 2010
These drawings and design intent are the sole property of the City of Huntsville which may not be reproduced without written permission.

ALABAMA REGISTERED No. 26754 PROFESSIONAL ENGINEER
7/22/2011

HUNTSVILLE
The Star of Alabama

STORM PROFILES

REDSTONE GATEWAY - PACKAGE 1A

CITY OF HUNTSVILLE
HUNTSVILLE, ALABAMA

REV	DATE	DRAWN	CHECKED	DESCRIPTION
15	7/22/11	TBE	TAR	ADDED JUNCTION BOX
13	7/12/11	TBE	TAR	SUBSTATION POND OUTLET
10	6/7/2011	TBE	TAR	STORM LINE A & J
4	4/28/11	TBE	TAR	STORM LINE A REVISION
2	2/4/2011	TBE	TAR	STORM PROFILE REVISIONS

COH REVIEW: TRAFFIC | REAL ESTATE | PE | DRAINAGE

Date 12/16/2010

Checked By RAN | Drawn By BSJ

Sheet Number C10.0 | Sequence 35 | Total 44