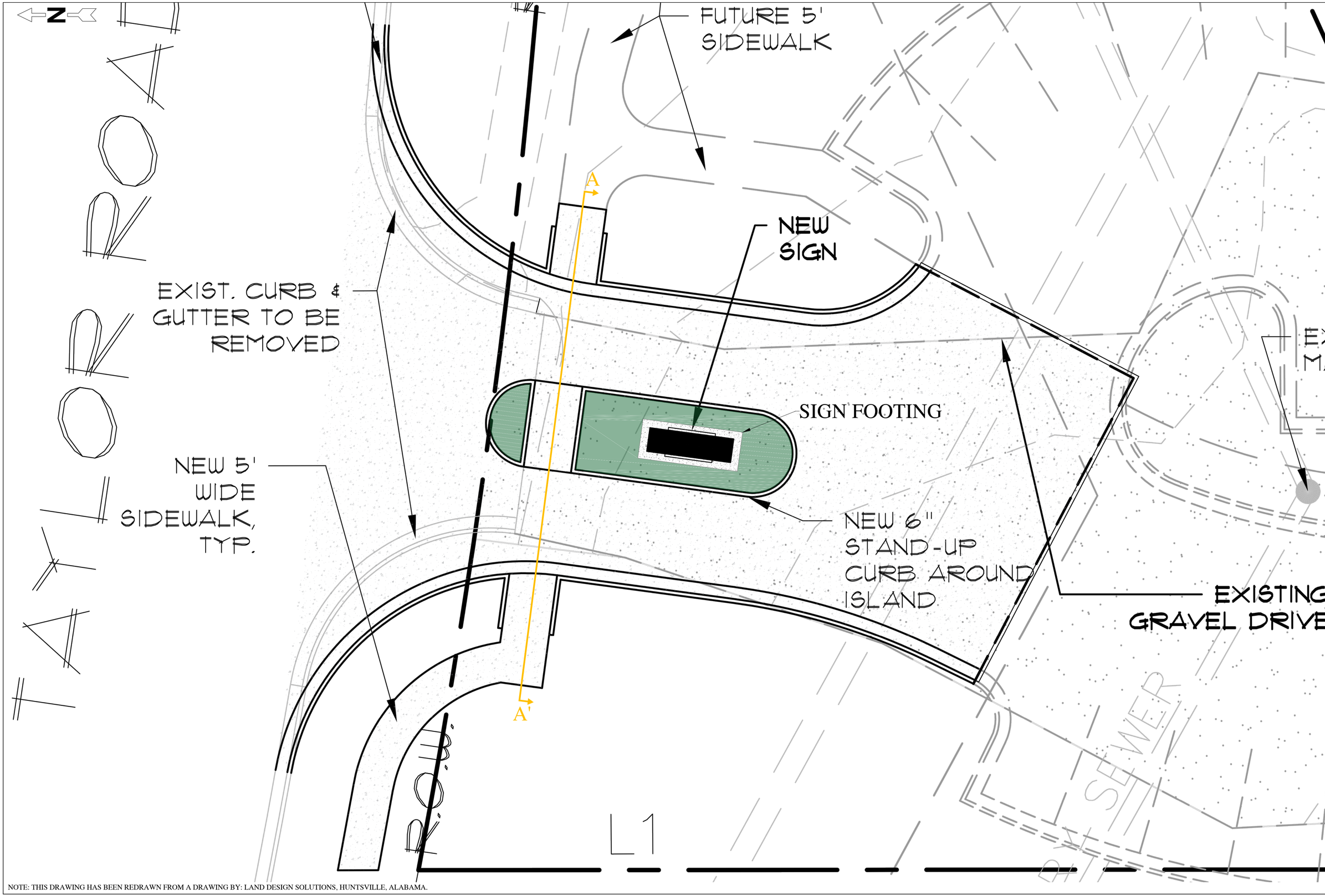

NOTE: THIS DRAWING HAS BEEN REDRAWN FROM A DRAWING BY: LAND DESIGN SOLUTIONS, HUNTSVILLE, ALABAMA.

RESERVED FOR STAMP

ALABAMA LICENSED No. 18224 PROFESSIONAL ENGINEER KEITH JEROME MINNOCK

REVISIONS

ENTRANCE SIGN PLAN VIEW

GOLDSMITH-SCHIFFMAN WILDLIFE SANCTUARY
TAYLOR ROAD
HUNTSVILLE, ALABAMA

OML, Inc.
5151 Research Dr. NW
Huntsville, AL 35805
PH: (256) 837 - 7664
FAX: (256) 837 - 7677

DATE: 07-30-2014

SCALE: 1" = 4'

DRAWN BY: CCT

CHECKED BY: KJM

JOB NUMBER
6982

DRAWING NUMBER

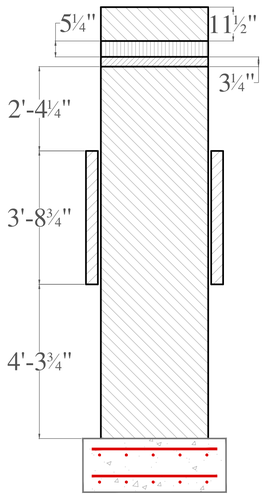

RIGHT SIDE VIEW

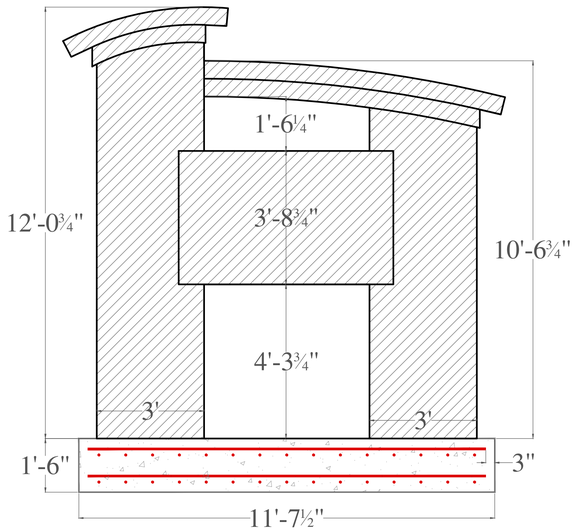

ELEVATION

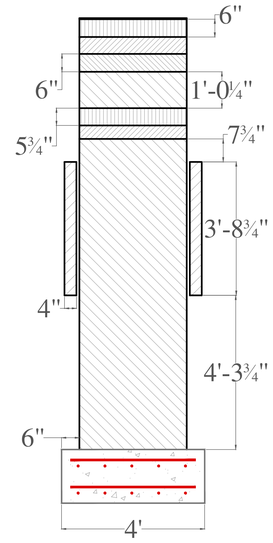

LEFT SIDE VIEW

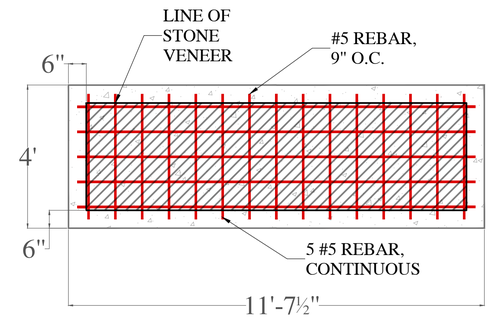

PLAN VIEW

NOTE: ALL CONCRETE SHALL MEET A COMPRESSIVE STRENGTH OF 3000 PSI IN 28 DAYS.

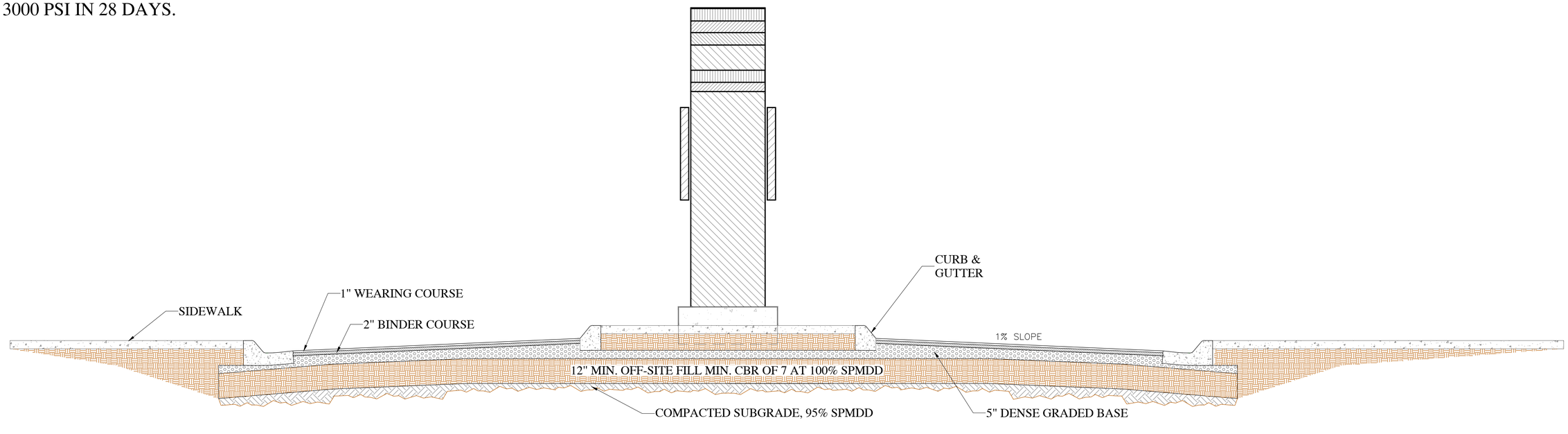

NOTE: THIS DRAWING HAS BEEN REDRAWN FROM A DRAWING BY: LAND DESIGN SOLUTIONS, HUNTSVILLE, ALABAMA.

RESERVED FOR STAMP

ALABAMA LICENSED No. 18224 PROFESSIONAL ENGINEER KEITH JEROME NIMMONS

REVISIONS

ENTRANCE SIGN DETAILS

GOLDSMITH-SCHIFFMAN WILDLIFE SANCTUARY
TAYLOR ROAD
HUNTSVILLE, ALABAMA

OMI, Inc.
5151 Research Dr. NW
Huntsville, AL 35805
PH: (256) 837 - 7664
FAX: (256) 837 - 7677

DATE: 07-30-2014

SCALE: 1/2" = 1'

DRAWN BY: CCT

CHECKED BY: KJM

JOB NUMBER
6982

DRAWING NUMBER
2 OF 2