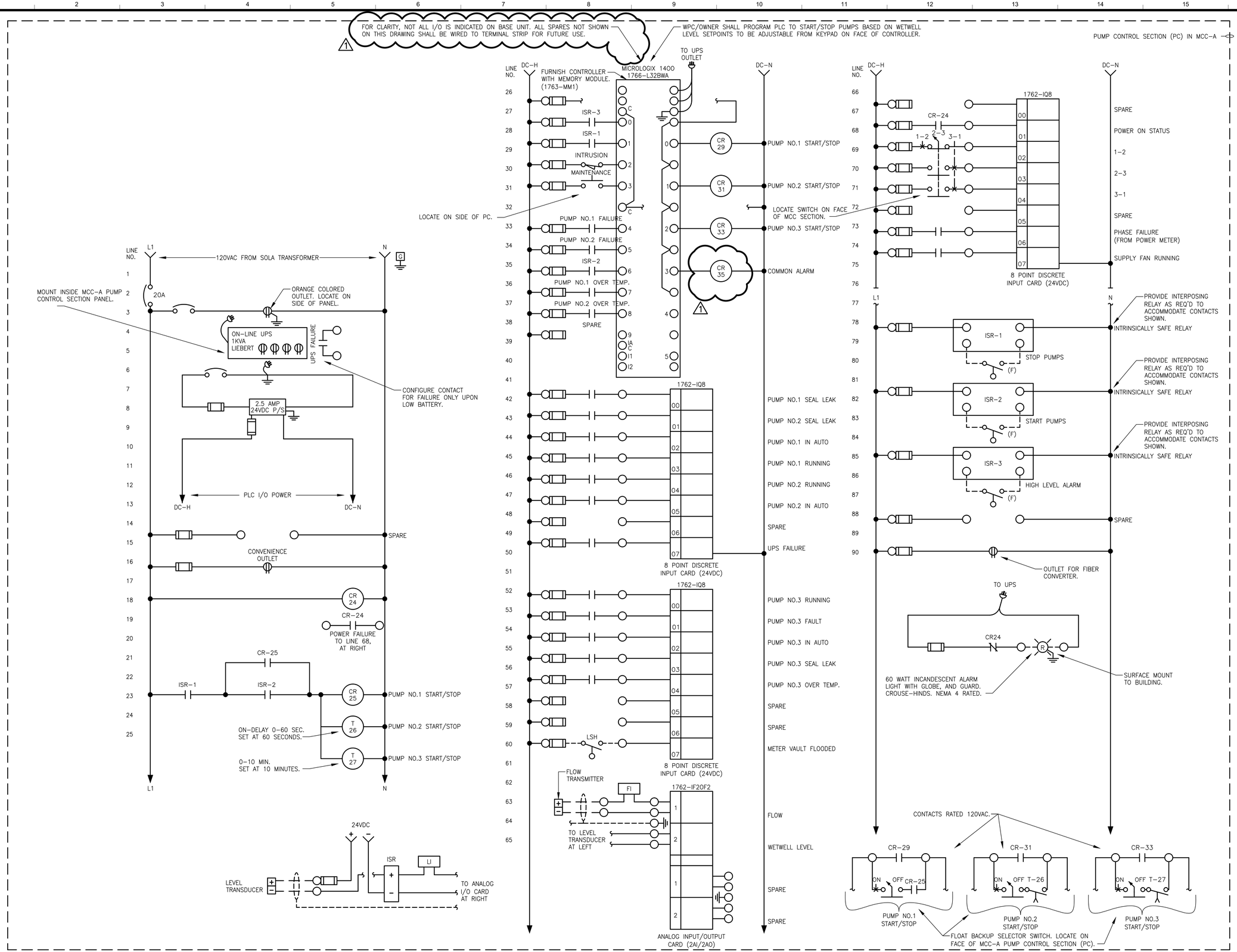

TETRA TECH
www.tetratech.com
101 CHURCH STREET, SUITE 201
HUNTSVILLE, ALABAMA 35801
TEL.: 256-551-0222

MARK	DATE	DESCRIPTION	BY
1	4/2/14	ADDENDUM #1	MGD

Client: CITY OF HUNTSVILLE
Proj. Loc.: HUNTSVILLE, ALABAMA

GOOSE CREEK PUMP STATION
HUNTSVILLE, ALABAMA

ELECTRICAL WIRING DIAGRAMS

Project No.:	07106
Designed By:	GCJ
Drawn By:	JLS
Checked By:	

E-6

OF 7

Copyright: Tetra Tech