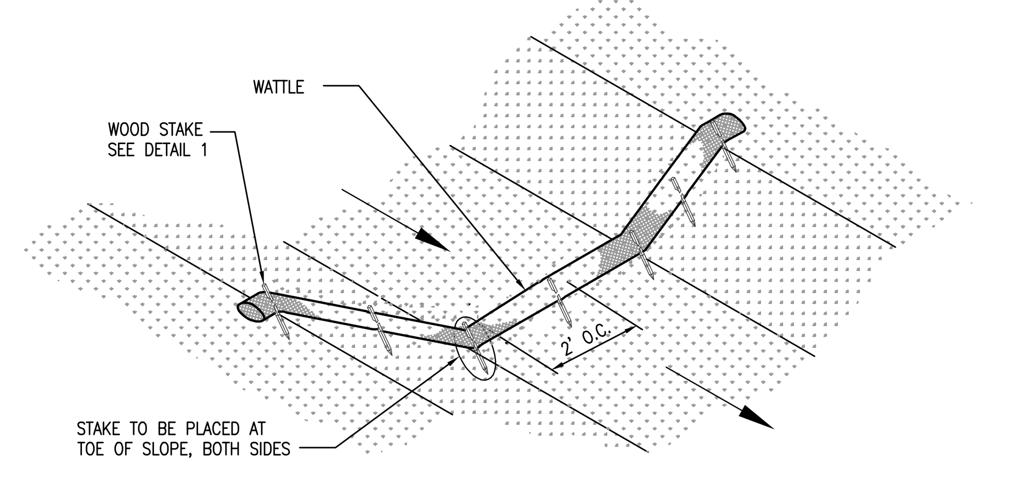

Wattle Spacing

REFER TO ALDOT SPECIAL DRAWING NO. ESC-300
FOR RECOMMENDED PLACEMENT INTERVAL BETWEEN WATTLES

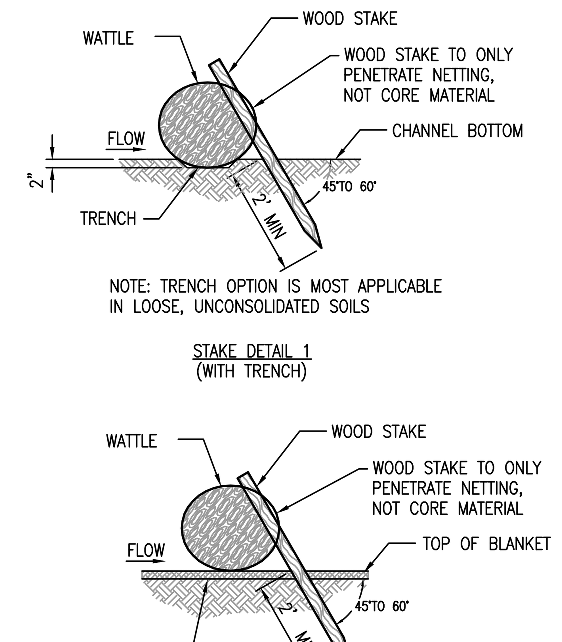

NOTE: TRENCH OPTION IS MOST APPLICABLE
IN LOOSE, UNCONSOLIDATED SOILS

STAKE DETAIL 1
(WITH TRENCH)

STAKE DETAIL 2
(NO TRENCH)

CdW Wattle Check Dam

N.T.S.

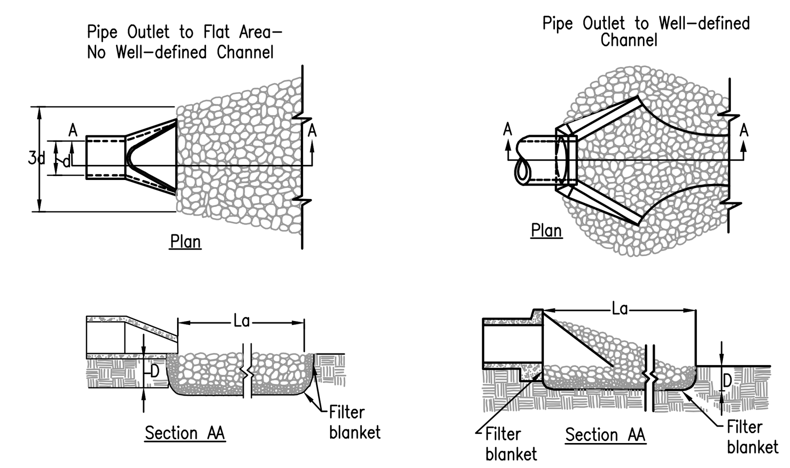

SPECIAL NOTES:
1. RIP RAP DISCHARGE APRON SHALL BE INSTALLED AT A ZERO SLOPE.
2. A FILTER BLANKET OR FILTER FABRIC SHOULD BE INSTALLED BETWEEN THE RIPRAP AND SOIL FOUNDATION.
3. DEPTH OF APRON SHALL BE NO LESS THAN 6".
4. FOR DETERMINING APRON LENGTH, WIDTH, AND MEDIAN STONE SIZE, REFER TO FIGURES OP-2 AND OP-3 FROM THE LATEST ALABAMA EROSION CONTROL HANDBOOK.
5. THE GRADATION OF RIPRAP SHALL BE PER TABLES OP-2 AND OP-3 FROM THE LATEST ALABAMA EROSION CONTROL HANDBOOK.

OP Outlet Protection

N.T.S.

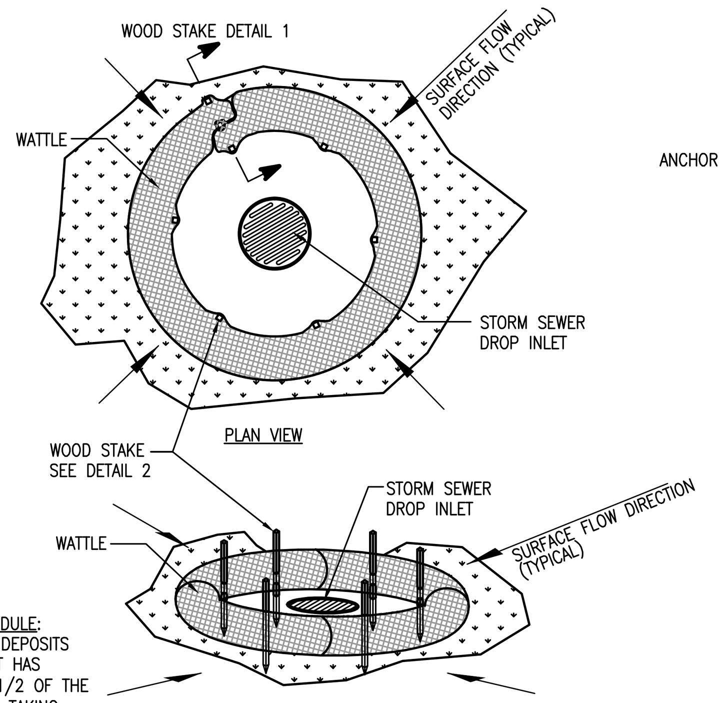

MAINTENANCE SCHEDULE:
REMOVE SEDIMENT DEPOSITS PROMPTLY AFTER IT HAS ACCUMULATED TO 1/2 OF THE ORIGINAL CAPACITY, TAKING CARE NOT TO UNDERMINE THE ENTRENCHED WATTLES. INSPECT PERIODICALLY FOR DETERIORATION OR DAMAGE FROM CONSTRUCTION ACTIVITIES. REPAIR DAMAGED BARRIER IMMEDIATELY.

Drop Inlet Protection

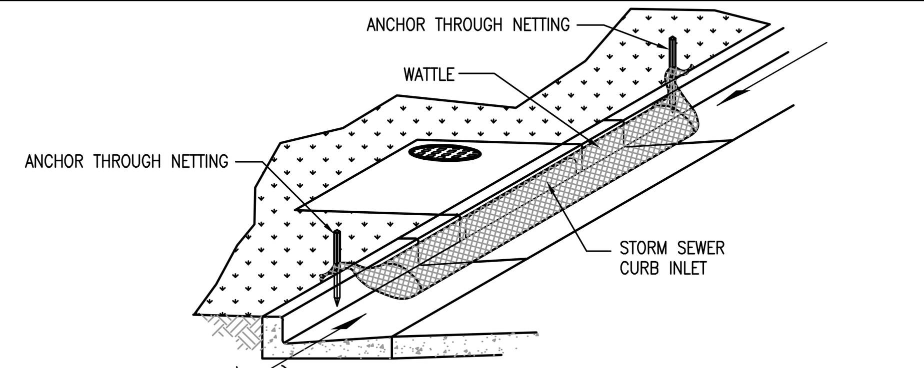

Curb Inlet Protection

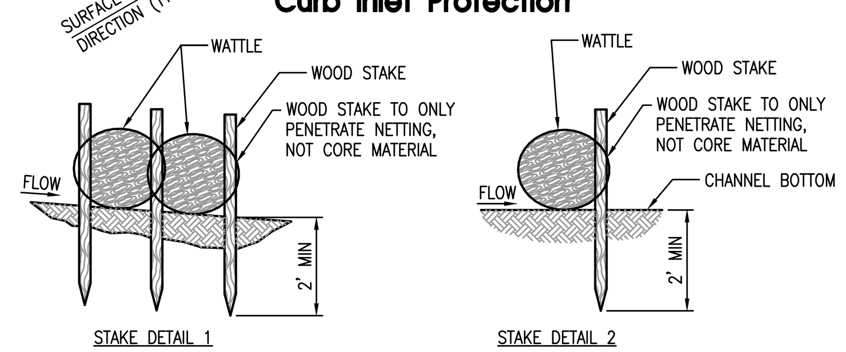

WIP Wattle Inlet Protection

N.T.S.

NOTE:
WATTLES MAY BE A STRAW WATTLE, A MULCH WATTLE, OR APPROVED EQUAL. STONE WATTLES SHALL BE USED FOR CURB INLETS ADJACENT TO PAVING.

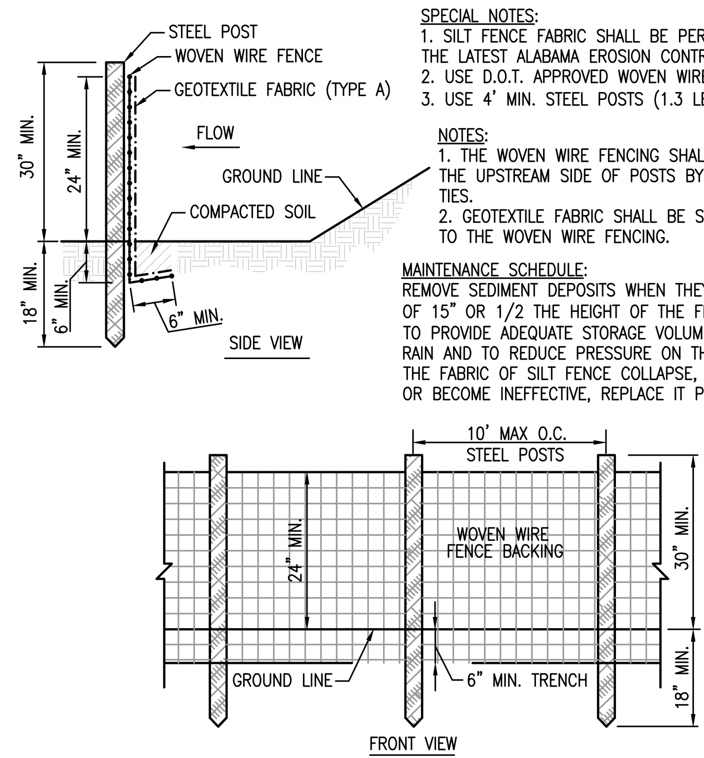

SPECIAL NOTES:
1. SILT FENCE FABRIC SHALL BE PER TABLE SB-1 FROM THE LATEST ALABAMA EROSION CONTROL HANDBOOK.
2. USE D.O.T. APPROVED WOVEN WIRE FENCE.
3. USE 4' MIN. STEEL POSTS (1.3 LB/FT MIN.).

NOTES:
1. THE WOVEN WIRE FENCING SHALL BE FASTENED TO THE UPSTREAM SIDE OF POSTS BY STAPLES OR WIRE TIES.
2. GEOTEXTILE FABRIC SHALL BE SECURELY FASTENED TO THE WOVEN WIRE FENCING.

MAINTENANCE SCHEDULE:
REMOVE SEDIMENT DEPOSITS WHEN THEY REACH A DEPTH OF 15" OR 1/2 THE HEIGHT OF THE FENCE AS INSTALLED TO PROVIDE ADEQUATE STORAGE VOLUME FOR THE NEXT RAIN AND TO REDUCE PRESSURE ON THE FENCE. SHOULD THE FABRIC OF SILT FENCE COLLAPSE, TEAR, DECOMPOSE OR BECOME INEFFECTIVE, REPLACE IT PROMPTLY.

SB Silt Fence – Type A

N.T.S.

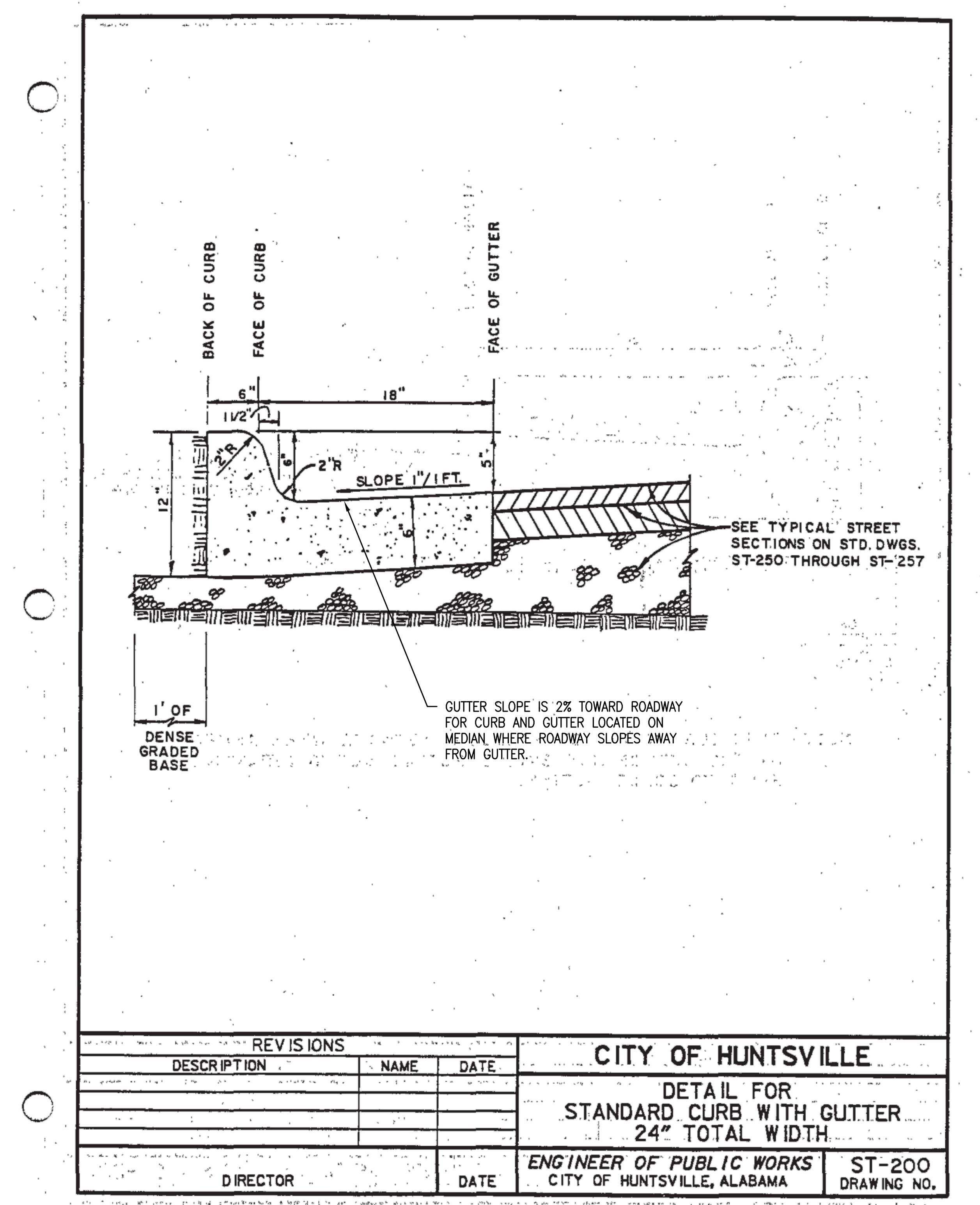

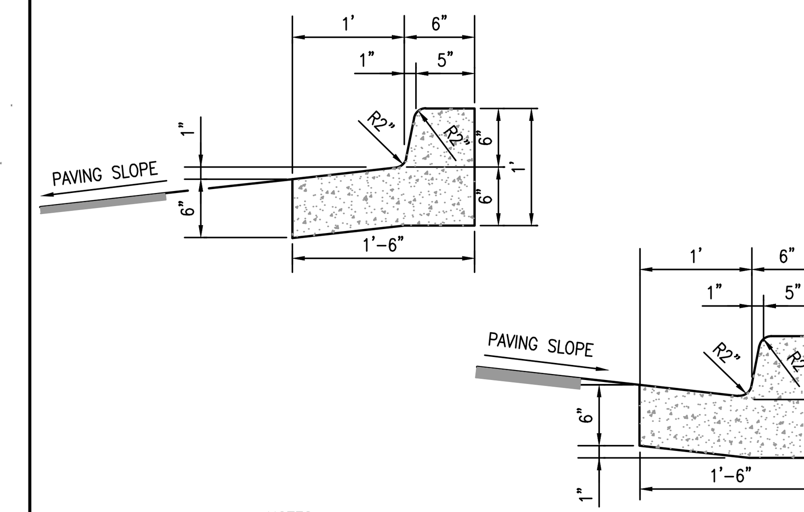

NOTES:
1. SLOPE GUTTER AS SHOWN ACCORDING TO PAVING SLOPE. THIS SLOPE SHALL NOT EXCEED 5% TO COMPLY WITH ADA REQUIREMENTS AT ANY HANDICAP RAMP.
2. 3/4" EXPANSION JOINT REQUIRED AT P.C.'S AND P.T.'S OF ALL CURVES, AT STRUCTURES (CURB INLETS, WHEELCHAIR RAMPS, ETC.) AND EVERY 100' MAX. WITH FILLER MATERIAL.
3. 3/16" SAWED JOINTS REQUIRED ON 20' INTERVALS.
4. 3,000 PSI CONCRETE UNLESS STATED OTHERWISE.

18" Curb & Gutter

N.T.S.

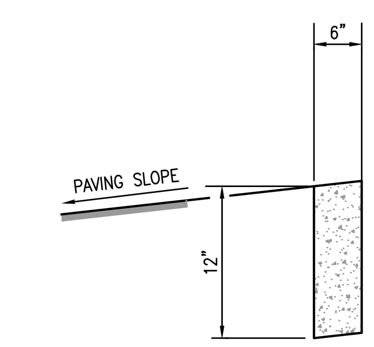

NOTES:
1. SLOPE GUTTER AS SHOWN ACCORDING TO PAVING SLOPE.
2. 3/4" EXPANSION JOINT REQUIRED AT P.C.'S AND P.T.'S OF ALL CURVES, AT STRUCTURES (CURB INLETS, WHEELCHAIR RAMPS, ETC.) AND EVERY 100' MAX. WITH FILLER MATERIAL.
3. 3/16" SAWED JOINTS REQUIRED ON 20' INTERVALS.
4. 3,000 PSI CONCRETE UNLESS STATED OTHERWISE.

6" FLUSH MOUNTED CURB

N.T.S.

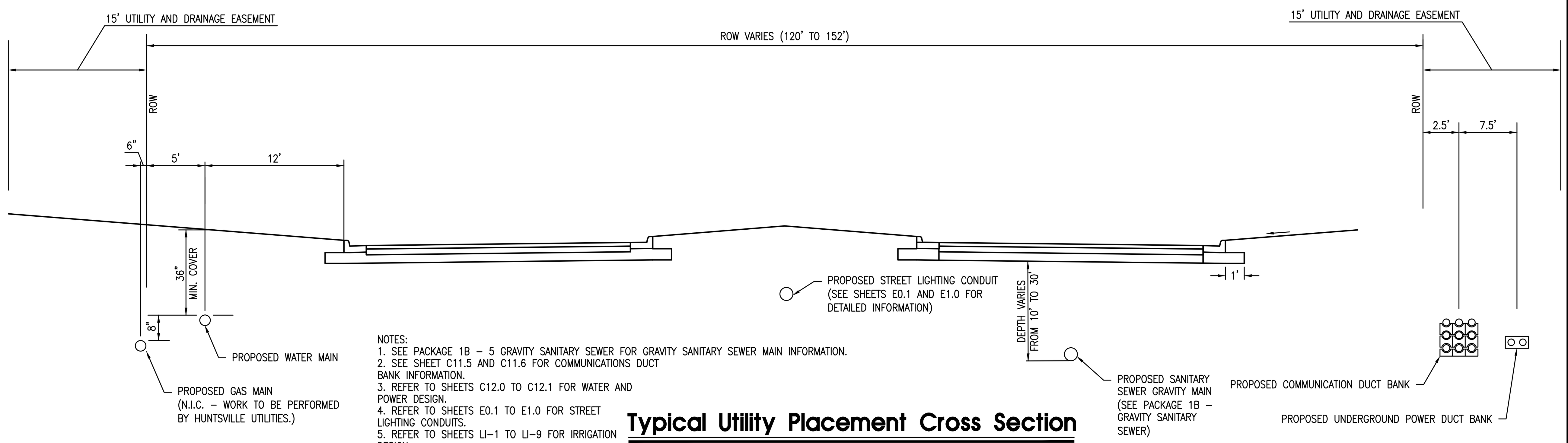

NOTES:
1. SEE PACKAGE 1B – 5 GRAVITY SANITARY SEWER FOR GRAVITY SANITARY SEWER MAIN INFORMATION.
2. SEE SHEET C11.5 AND C11.6 FOR COMMUNICATIONS DUCT BANK INFORMATION.
3. REFER TO SHEETS C12.0 TO C12.1 FOR WATER AND POWER DESIGN.
4. REFER TO SHEETS E0.1 TO E1.0 FOR STREET LIGHTING CONDUITS.
5. REFER TO SHEETS LI-1 TO LI-9 FOR IRRIGATION DESIGN.

Typical Utility Placement Cross Section

N.T.S.

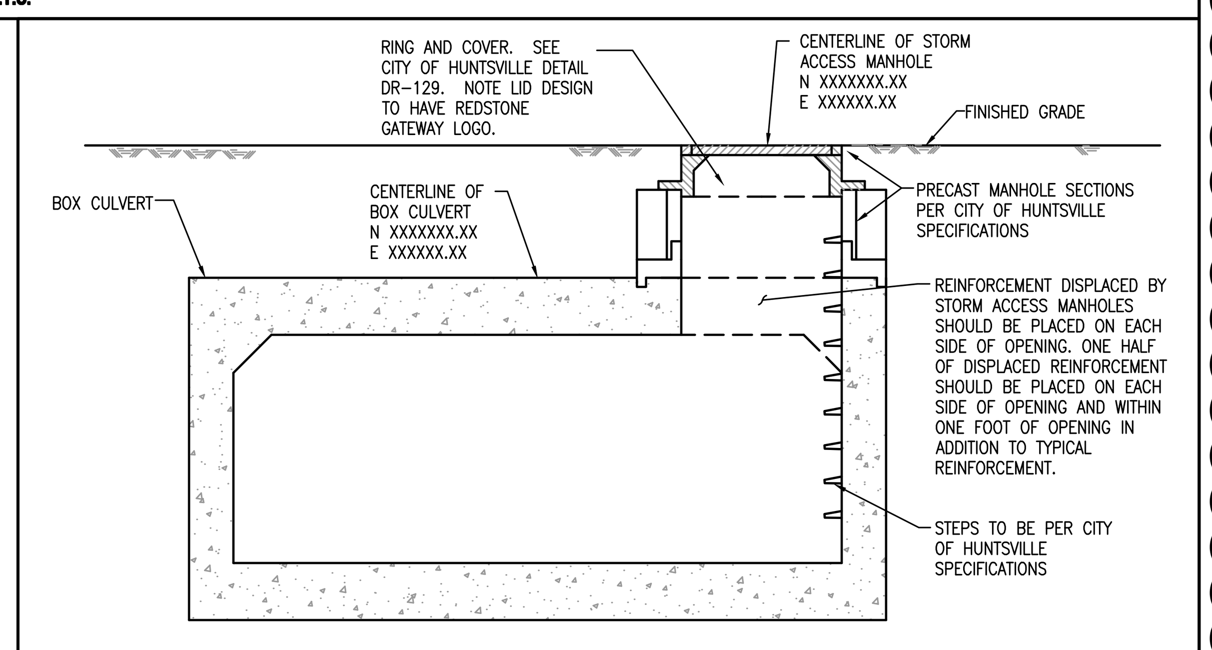

STORM ACCESS MANHOLE

N.T.S.

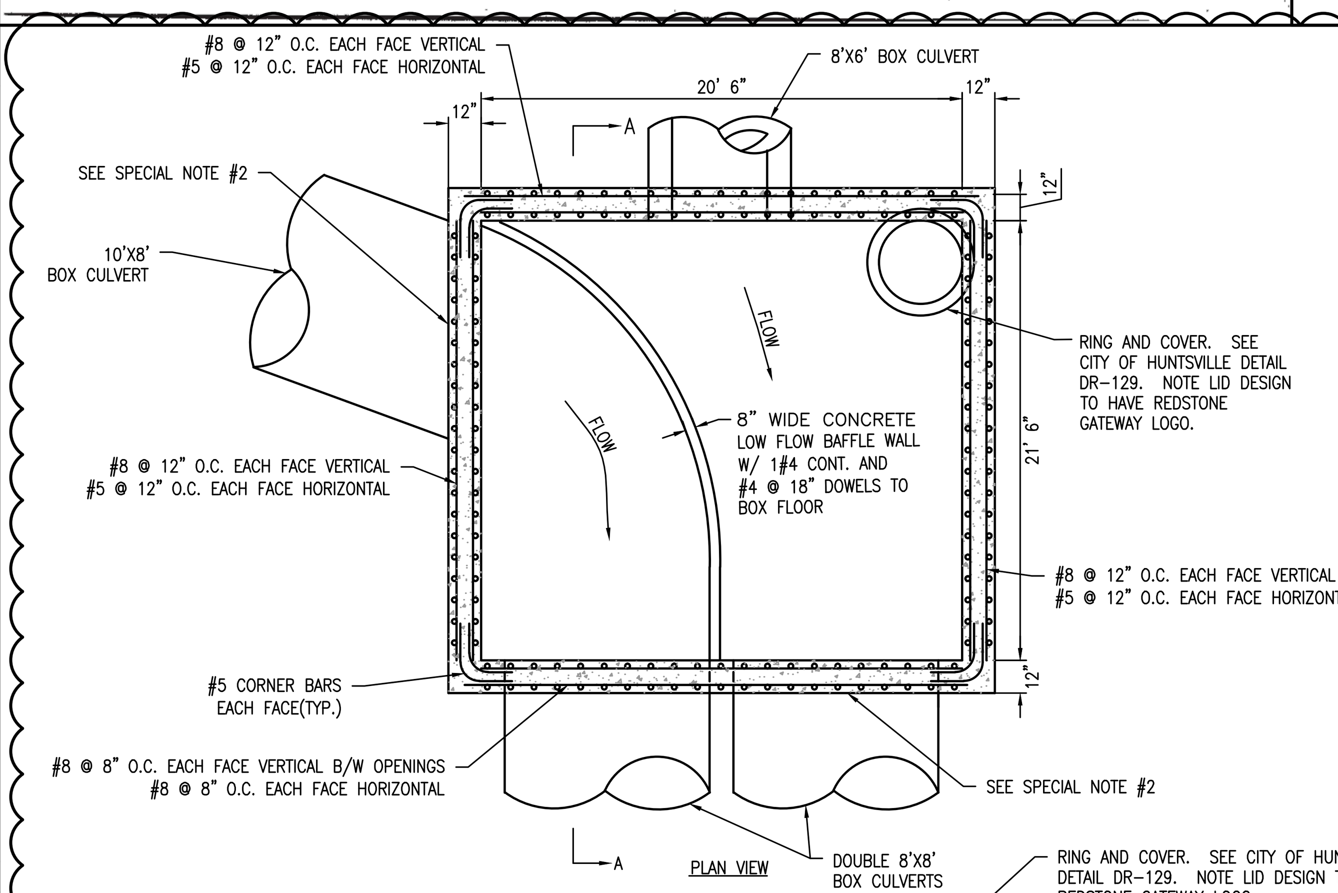

BAR SIZE	TENSION LAP SPLICE LENGTHS f'c = 4000 psi: TOP BARS A	TOP BARS B	OTHER BARS A	OTHER BARS B
#3	19"	24"	15"	19"
#4	25"	32"	19"	25"
#5	31"	40"	24"	31"
#6	37"	48"	29"	37"
#7	54"	70"	42"	54"
#8	62"	80"	48"	62"
#9	70"	91"	54"	70"
#10	79"	102"	61"	79"
#11	87"	113"	67"	87"

NOTE:
1. TOP BARS ARE HORIZONTAL REINFORCEMENT WITH MORE THAN 12" OF CONCRETE CAST BELOW THE REINFORCEMENT.

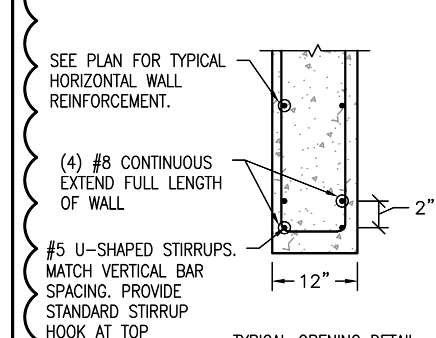

TYPICAL OPENING DETAIL

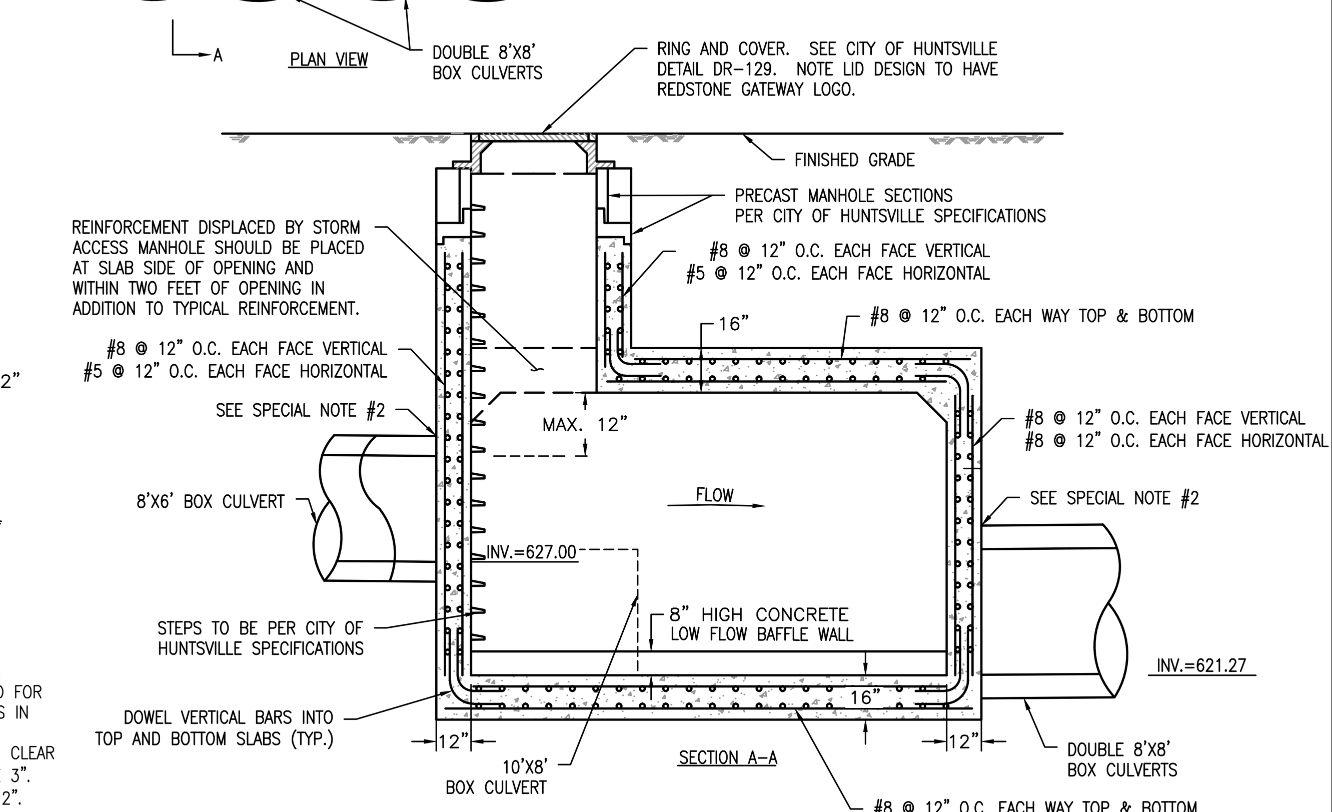

SPECIAL NOTES:
1. CONCRETE TO BE MINIMUM 4000 PSI.
2. TYPICAL OPENING DETAIL TO BE USED FOR REINFORCEMENT ABOVE ALL OPENINGS IN JUNCTION BOX WALLS.
3. FOR CONCRETE CAST AGAINST EARTH, CLEAR COVER TO REINFORCEMENT SHALL BE 3". ALL OTHER CLEAR COVER SHALL BE 2".
4. PLACE VERTICAL REINFORCEMENT 2" CLEAR AT FACE OF WALLS THEN PLACE HORIZONTAL REINFORCEMENT.

JUNCTION BOX DETAIL–STR #1A

N.T.S.

LBYD
Civil and Structural Engineers
Birmingham, Alabama
Atlanta, Georgia
Huntsville, Alabama
Tampa Bay, Florida
www.lbyd.com

LBYD Project Number
302-10-002A

LBYD, Inc.
305 Church Street SW
Suite 719
Huntsville, AL 35801
Phone (256) 533-1575
Fax (256) 533-1744

© copyright 2011
These drawings and design intent are the sole property of City of Huntsville which may not be reproduced without written permission.

ALABAMA REGISTERED No. 26754 PROFESSIONAL ENGINEER
9/28/2011

HUNTSVILLE
The Star of Alabama

DETAILS

REDSTONE GATEWAY - PACKAGE 1F
ROADWAY IMPROVEMENTS
CITY OF HUNTSVILLE
HUNTSVILLE, ALABAMA

REV	DATE	BY	DESCRIPTION
#1	09/28/11	TBE	ADDENDUM #1

TRAFFIC | REAL ESTATE | PE | DRAINAGE | CCH REVIEW

DATE: SEPTEMBER 15, 2011
DRAWN: BSJ
CHECKED: RAN

C14.4

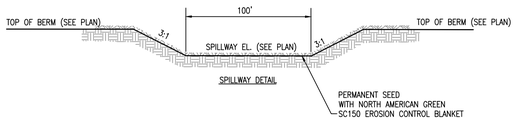

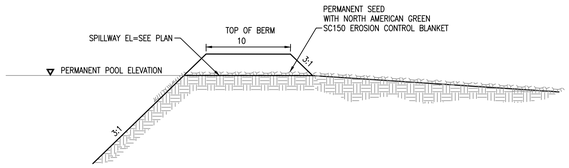

POND G OUTLET SPILLWAY DETAIL

N.T.S.

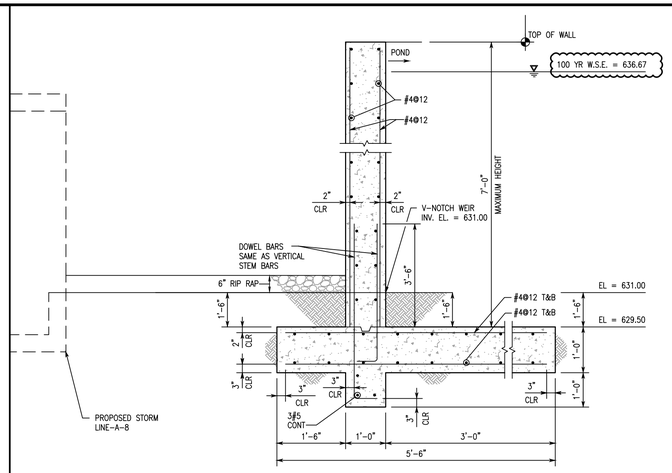

SECTION VIEW

N.T.S.

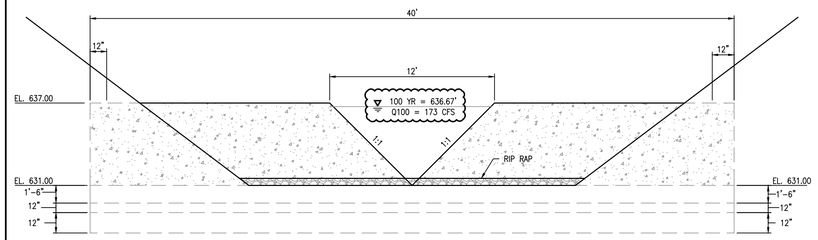

FRONT VIEW

N.T.S.

POND F OUTLET CONTROL STRUCTURE

N.T.S.

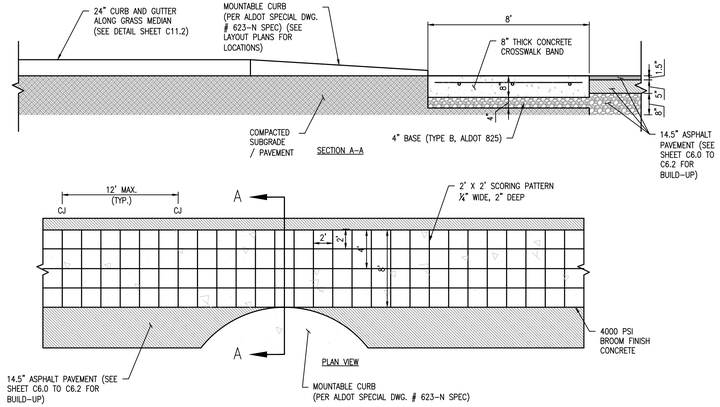

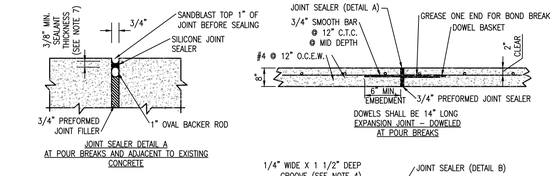

NOTES:
1. CONCRETE SURFACE SHALL BE BROOM FINISH
2. CONTRACTOR SHALL INSTALL 4" OF CRUSHED AGGREGATE BASE COURSE, TYPE B (ALDOT 825) UNDER ALL CONCRETE PAVING
3. CONCRETE SHALL HAVE 4000 PSI AT 28 DAYS
4. CONTRACTOR SHALL INSTALL CONTROL JOINTS IN CONCRETE PAVING AT 12' MAX SPACING BOTH WAYS.
5. CONTROL JOINT TO BE 1/4 OF THE SLAB THICKNESS TYPICALLY.
6. EXPANSION JOINTS AT POUR BREAKS AND 100' MAX SPACING. COORDINATE WITH CONTROL JOINTS.
7. CONTRACTOR TO FOLLOW MANUFACTURERS RECOMMENDATIONS.

Boulevard Concrete Crosswalk Detail

N.T.S.

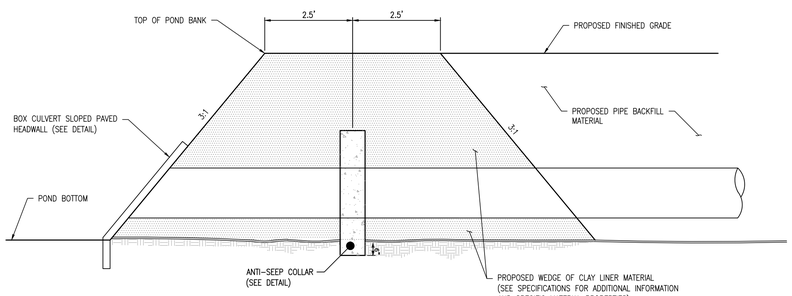

* CONTRACTOR SHALL INSTALL RETENTION POND EARTH PLUG AT ALL STORM PIPE PENETRATIONS INTO PONDS. EARTH PLUG SHALL BE INSTALLED FIRST THEN EXCAVATED FOR PIPE AND COLLAR INSTALLATION. EXCAVATED EARTH PLUG MATERIAL SHALL BE BACKFILLED IN PIPE TRENCH UPON COMPLETION OF PIPE INSTALLATION.

* CONTRACTOR SHALL LOCATE ANTI-SEEP COLLAR AT THE PIPE JOINT CLOSEST TO SHOWN LOCATION. JOINT MUST BE LOCATED WITHIN PLUG WEDGE.

RETENTION POND EARTH PLUG

N.T.S.

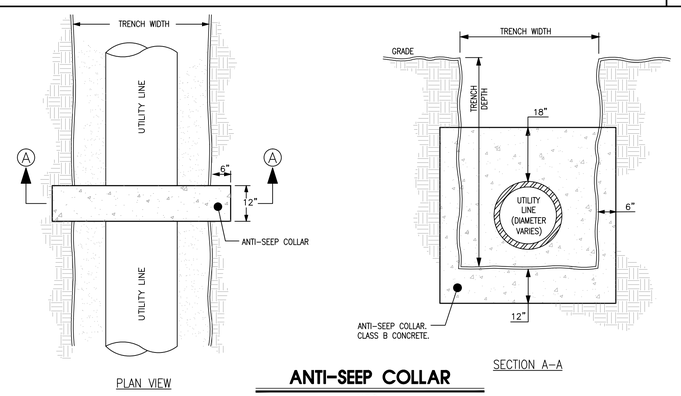

ANTI-SEEP COLLAR

N.T.S.

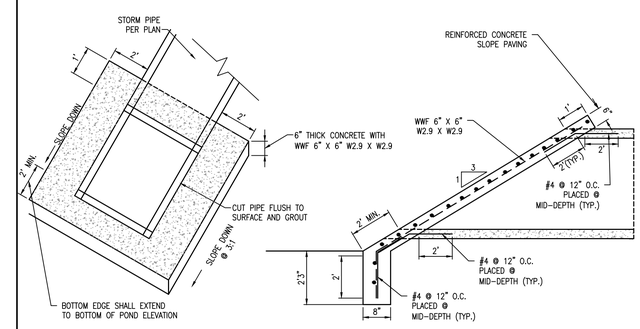

Box Culvert Slope Paved Headwall

N.T.S.

LBYD
Civil and Structural Engineers
Birmingham, Alabama
Atlanta, Georgia
Huntsville, Alabama
Tampa Bay, Florida
www.lbyd.com

LBYD Project Number
302-10-002A

LBYD, Inc.
305 Church Street SW
Suite 719
Huntsville, AL 35801
Phone (256) 533-1575
Fax (256) 533-1744

© copyright 2011
These drawings and design intent are the sole property of City of Huntsville which may not be reproduced without written permission.

ALABAMA REGISTERED No. 26754 PROFESSIONAL ENGINEER
9/28/2011

HUNTSVILLE
The Star of Alabama

DETAILS

REDSTONE GATEWAY - PACKAGE 1F
ROADWAY IMPROVEMENTS
CITY OF HUNTSVILLE
HUNTSVILLE, ALABAMA

REV	DATE	DRAWN	CHECKED	ADDENDUM #1	TRAFFIC	REAL ESTATE	PE	DRAINAGE
#1	09/28/11	TBE	TAR					

DRAWN: BSJ
CHECKED: RAN
DATE: SEPTEMBER 15, 2011

C14.5

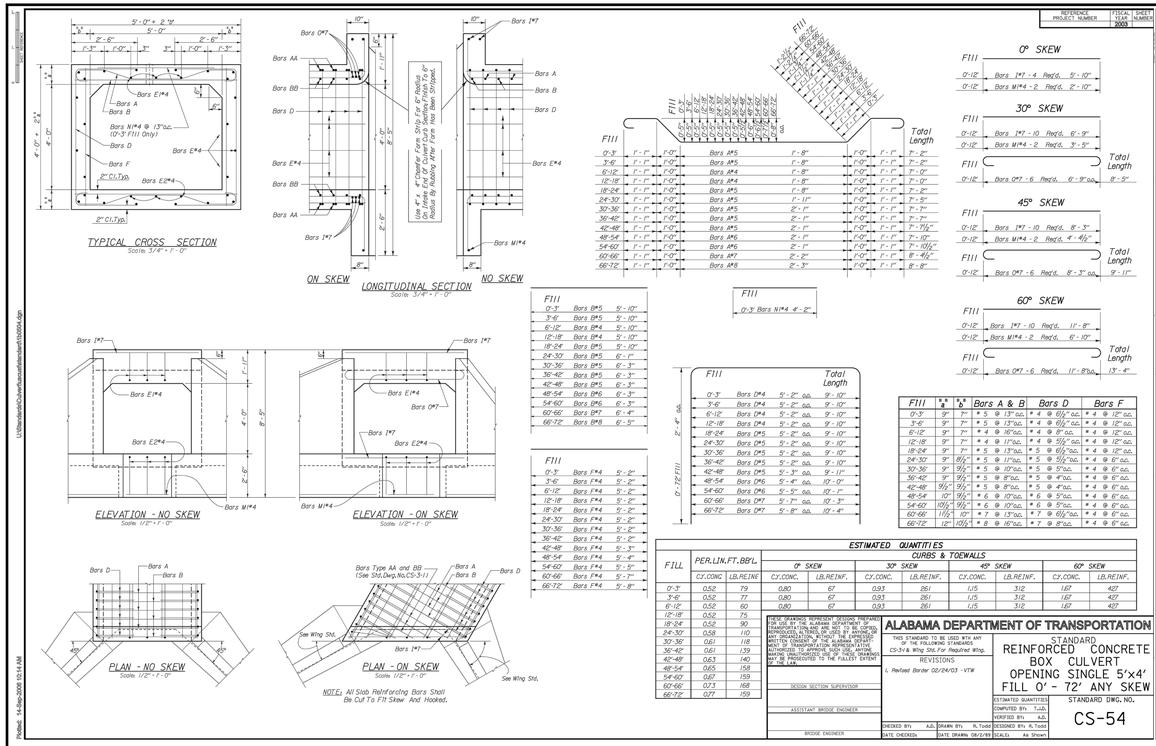

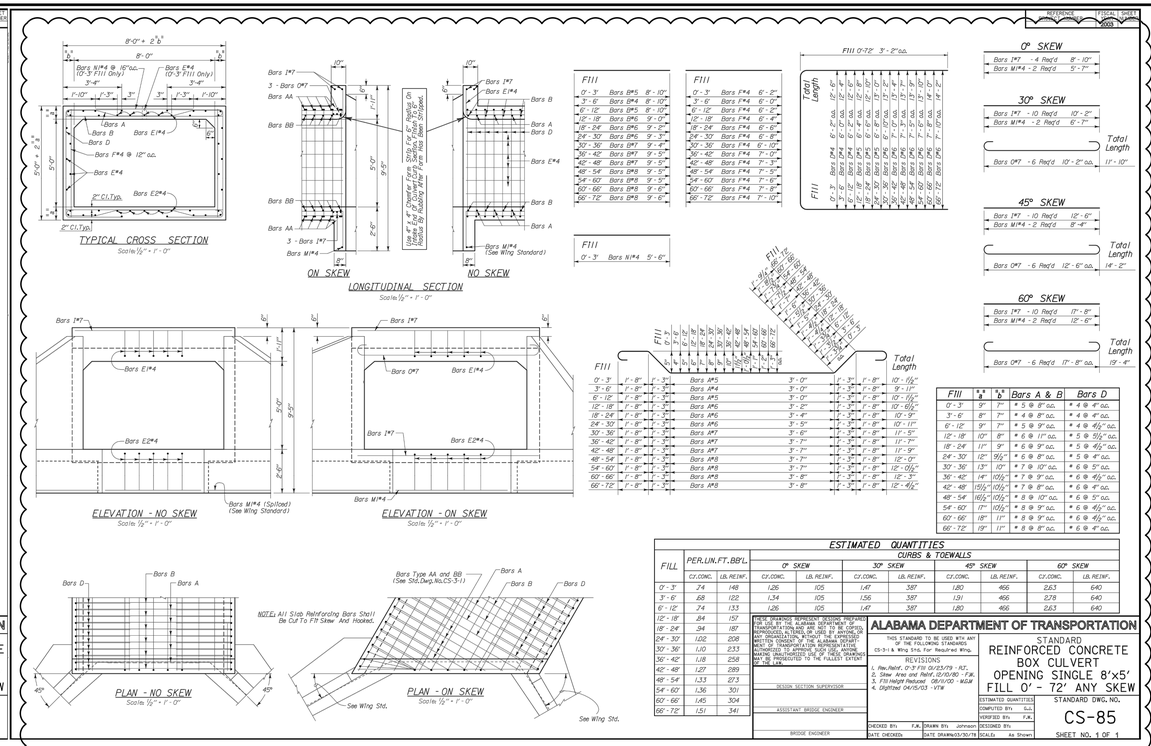

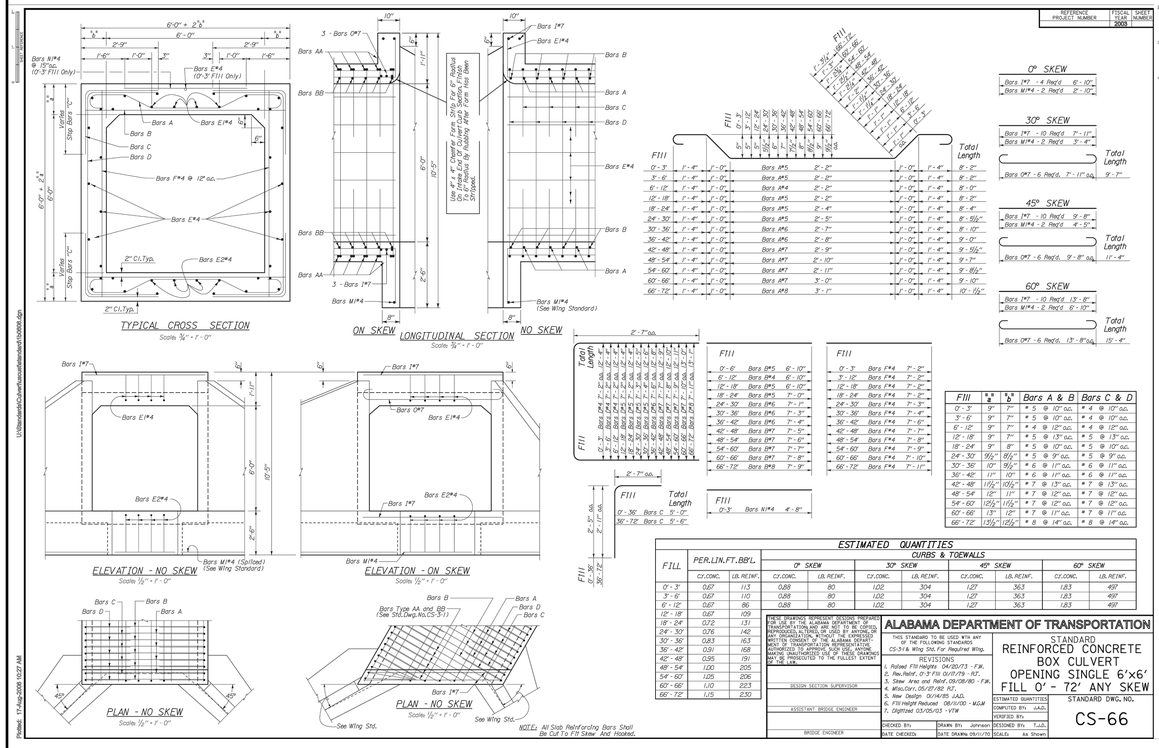

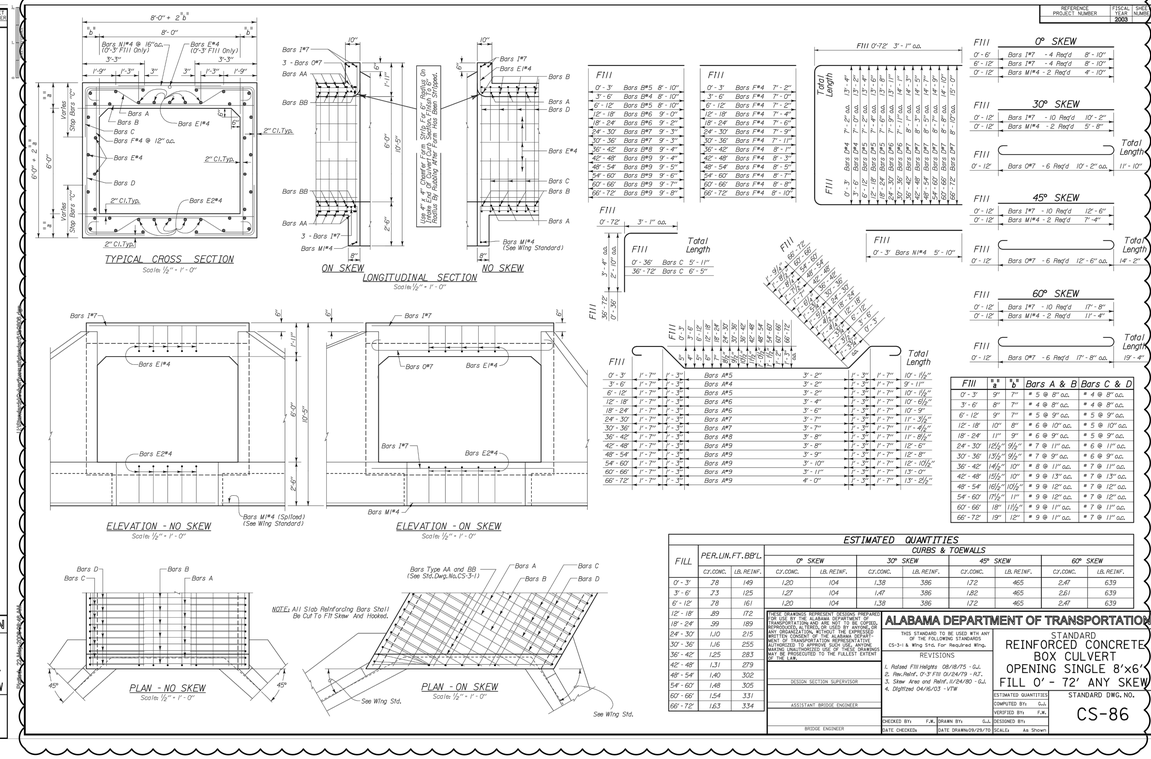

LBYD
Civil and Structural Engineers
Birmingham, Alabama
Atlanta, Georgia
Huntsville, Alabama
Tampa Bay, Florida
www.lbyd.com

LBYD Project Number
302-10-002A

LBYD, Inc.
305 Church Street SW
Suite 719
Huntsville, AL 35801
Phone (256) 533-1575
Fax (256) 533-1744

© copyright 2011
These drawings and design intent are the sole property of City of Huntsville which may not be reproduced without written permission.

HUNTSVILLE
The Star of Alabama

DETAILS

REDSTONE GATEWAY - PACKAGE 1F

ROADWAY IMPROVEMENTS
CITY OF HUNTSVILLE
HUNTSVILLE, ALABAMA

REV	DATE	DRAWN	TBE	#1	09/26/11
REV	DATE	DRAWN	TAR	ADDENDUM #1	
		CHECKED		DESCRIPTION	
		CHECKED	RAN		

TRAFFIC	PE	DRAINAGE
REAL ESTATE	CON REVIEW	

DATE: SEPTEMBER 15, 2011

DRAWN: BSJ

C14.9