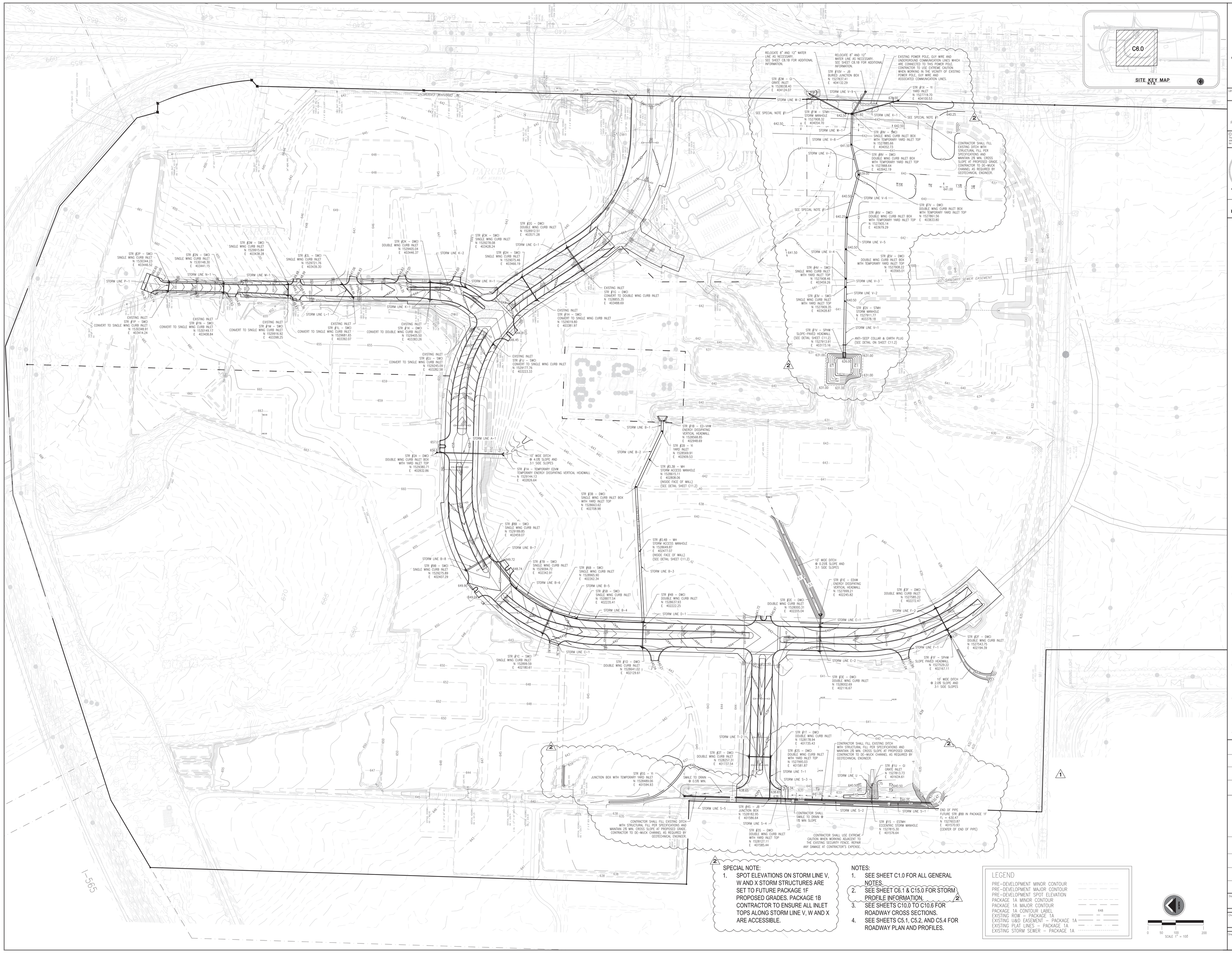

SPECIAL NOTE:

1. SPOT ELEVATIONS ON STORM LINE V, W AND X STORM STRUCTURES ARE SET TO FUTURE PACKAGE 1F PROPOSED GRADES. PACKAGE 1B CONTRACTOR TO ENSURE ALL INLET TOPS ALONG STORM LINE V, W AND X ARE ACCESSIBLE.

NOTES:

1. SEE SHEET C1.0 FOR ALL GENERAL NOTES.
2. SEE SHEET C6.1 & C15.0 FOR STORM PROFILE INFORMATION.
3. SEE SHEETS C10.0 TO C10.6 FOR ROADWAY CROSS SECTIONS.
4. SEE SHEETS C5.1, C5.2, AND C5.4 FOR ROADWAY PLAN AND PROFILES.

LEGEND

PRE-DEVELOPMENT MINOR CONTOUR
PRE-DEVELOPMENT MAJOR CONTOUR
PRE-DEVELOPMENT SPOT ELEVATION
PACKAGE 1A MINOR CONTOUR
PACKAGE 1A MAJOR CONTOUR
PACKAGE 1A CONTOUR LABEL 648
EXISTING ROW – PACKAGE 1A
EXISTING U&D EASEMENT – PACKAGE 1A
EXISTING PLAT LINES – PACKAGE 1A
EXISTING STORM SEWER – PACKAGE 1A

0 50 100 200
SCALE 1" = 100'

LBYD
Civil and Structural Engineers
Atlanta, Georgia
Birmingham, Alabama
Huntsville, Alabama
www.lbyd.com

LBYD Project Number
302-10-002A

LBYD, Inc.
305 Church Street SW
Suite 719
Huntsville, AL 35801
Phone (256) 533-1575
Fax (256) 533-1744

© copyright 2010
These drawings and design intent are the sole property of the City of Huntsville which may not be reproduced without written permission.

ALABAMA REGISTERED No. 26754 PROFESSIONAL ENGINEER
08/25/2011

HUNTSVILLE
The Star of Alabama

GRADING AND STORM DRAINAGE PLAN

REDSTONE GATEWAY - PACKAGE 1B - ROADWAY AND UTILITIES

CITY OF HUNTSVILLE
HUNTSVILLE, ALABAMA

REV	DATE	DRAWN	CHECKED	DESCRIPTION
2	8/25/11	TBE	TAR	STORM LINE S, U, V, W & X
1	7/22/11	BSJ	TAR	ROADWAY MODIFICATIONS

NAVFC	NCS ESTIMATE	PE	DRAWING
	COH REVIEW		

Date: 04/12/2011

Checked By: RAN
Drawn By: BSJ

Sheet Number: C6.0
Sequence: 15
Total: 48

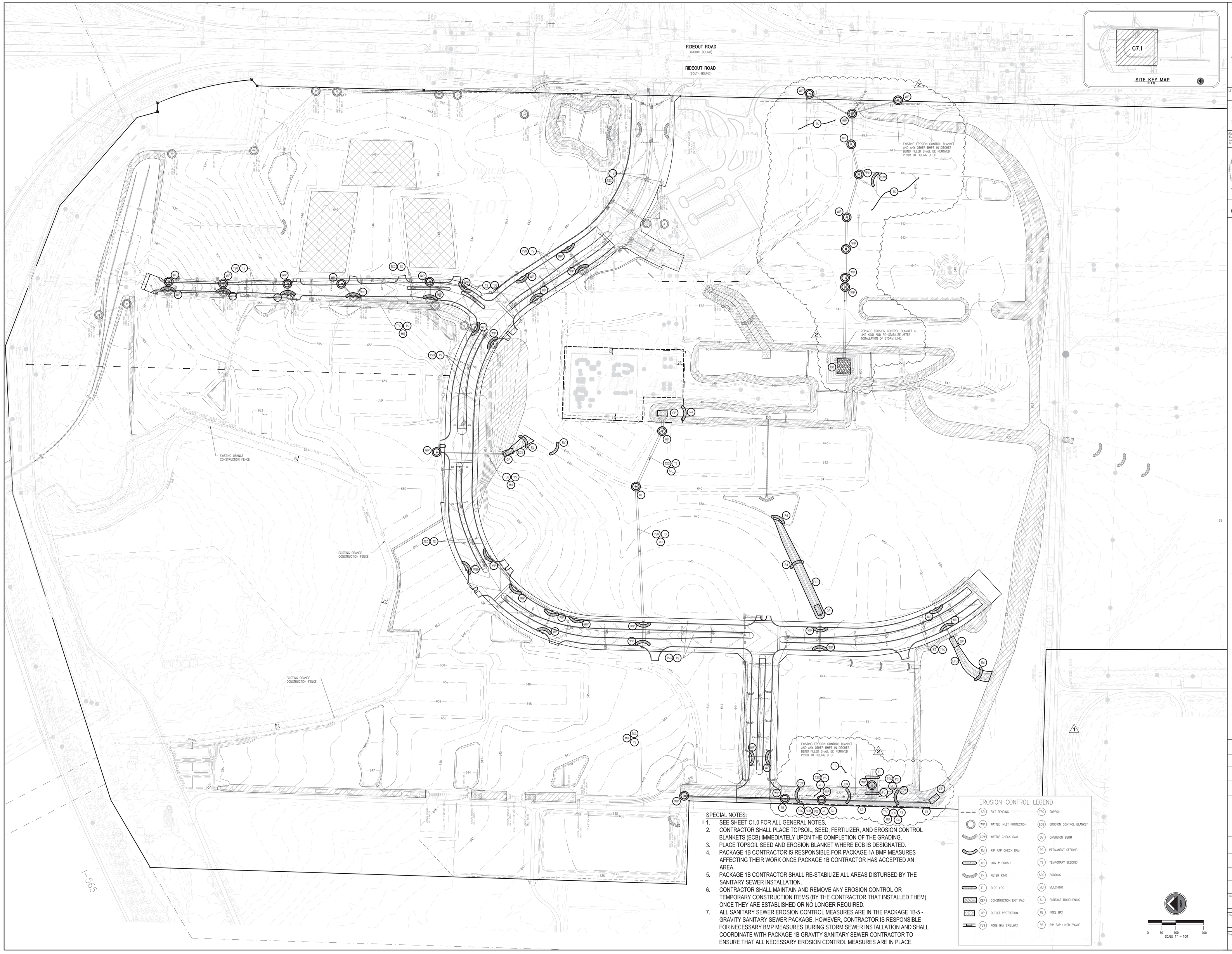

SPECIAL NOTES:

1. SEE SHEET C1.0 FOR ALL GENERAL NOTES.
2. CONTRACTOR SHALL PLACE TOPSOIL, SEED, FERTILIZER, AND EROSION CONTROL BLANKETS (ECB) IMMEDIATELY UPON THE COMPLETION OF THE GRADING.
3. PLACE TOPSOIL SEED AND EROSION BLANKET WHERE ECB IS DESIGNATED.
4. PACKAGE 1B CONTRACTOR IS RESPONSIBLE FOR PACKAGE 1A BMP MEASURES AFFECTING THEIR WORK ONCE PACKAGE 1B CONTRACTOR HAS ACCEPTED AN AREA.
5. PACKAGE 1B CONTRACTOR SHALL RE-STABILIZE ALL AREAS DISTURBED BY THE SANITARY SEWER INSTALLATION.
6. CONTRACTOR SHALL MAINTAIN AND REMOVE ANY EROSION CONTROL OR TEMPORARY CONSTRUCTION ITEMS (BY THE CONTRACTOR THAT INSTALLED THEM) ONCE THEY ARE ESTABLISHED OR NO LONGER REQUIRED.
7. ALL SANITARY SEWER EROSION CONTROL MEASURES ARE IN THE PACKAGE 1B-5 - GRAVITY SANITARY SEWER PACKAGE. HOWEVER, CONTRACTOR IS RESPONSIBLE FOR NECESSARY BMP MEASURES DURING STORM SEWER INSTALLATION AND SHALL COORDINATE WITH PACKAGE 1B GRAVITY SANITARY SEWER CONTRACTOR TO ENSURE THAT ALL NECESSARY EROSION CONTROL MEASURES ARE IN PLACE.

EROSION CONTROL LEGEND

SB	SILT FENCING	TSG	TOPSOIL
WIP	WATTLE INLET PROTECTION	ECB	EROSION CONTROL BLANKET
CDW	WATTLE CHECK DAM	DV	DIVERSION BERM
Rd	RIP RAP CHECK DAM	PS	PERMANENT SEEDING
LB	LOG & BRUSH	TS	TEMPORARY SEEDING
Fr	FILTER RING	SOD	SODDING
FL	FLOC LOG	MU	MULCHING
CEP	CONSTRUCTION EXIT PAD	Su	SURFACE ROUGHENING
OP	OUTLET PROTECTION	FB	FORE BAY
FbS	FORE BAY SPILLWAY	RS	RIP RAP LINED SWALE

0 50 100 200
SCALE 1" = 100

LBYD
Civil and Structural Engineers
Atlanta, Georgia
Birmingham, Alabama
Huntsville, Alabama
www.lbyd.com

LBYD Project Number
302-10-002A

LBYD, Inc.
305 Church Street SW
Suite 719
Huntsville, AL 35801
Phone (256) 533-1575
Fax (256) 533-1744

© copyright 2010
These drawings and design intent are the sole property of the City of Huntsville which may not be reproduced without written permission.

ALABAMA REGISTERED No. 26754 PROFESSIONAL ENGINEER
08/25/2011

HUNTSVILLE
The Star of Alabama

EROSION CONTROL PLAN - PACKAGE 1B MODIFICATIONS

REDSTONE GATEWAY - PACKAGE 1B - ROADWAY AND UTILITIES

CITY OF HUNTSVILLE
HUNTSVILLE, ALABAMA

REV	DATE	DRAWN	CHECKED	DESCRIPTION
2	8/25/11	TBE	TAR	STORM LINE S, U, V, W & X
1	7/22/11	BSJ	TAR	ROADWAY MODIFICATIONS

TRAFFIC	RCA ESTATE	PE	DRAINAGE
	COH REVIEW		

Date
04/12/2011

Checked By
RAN

Drawn By
BSJ

Sheet Number
C7.1

Sequence
18

Total
48

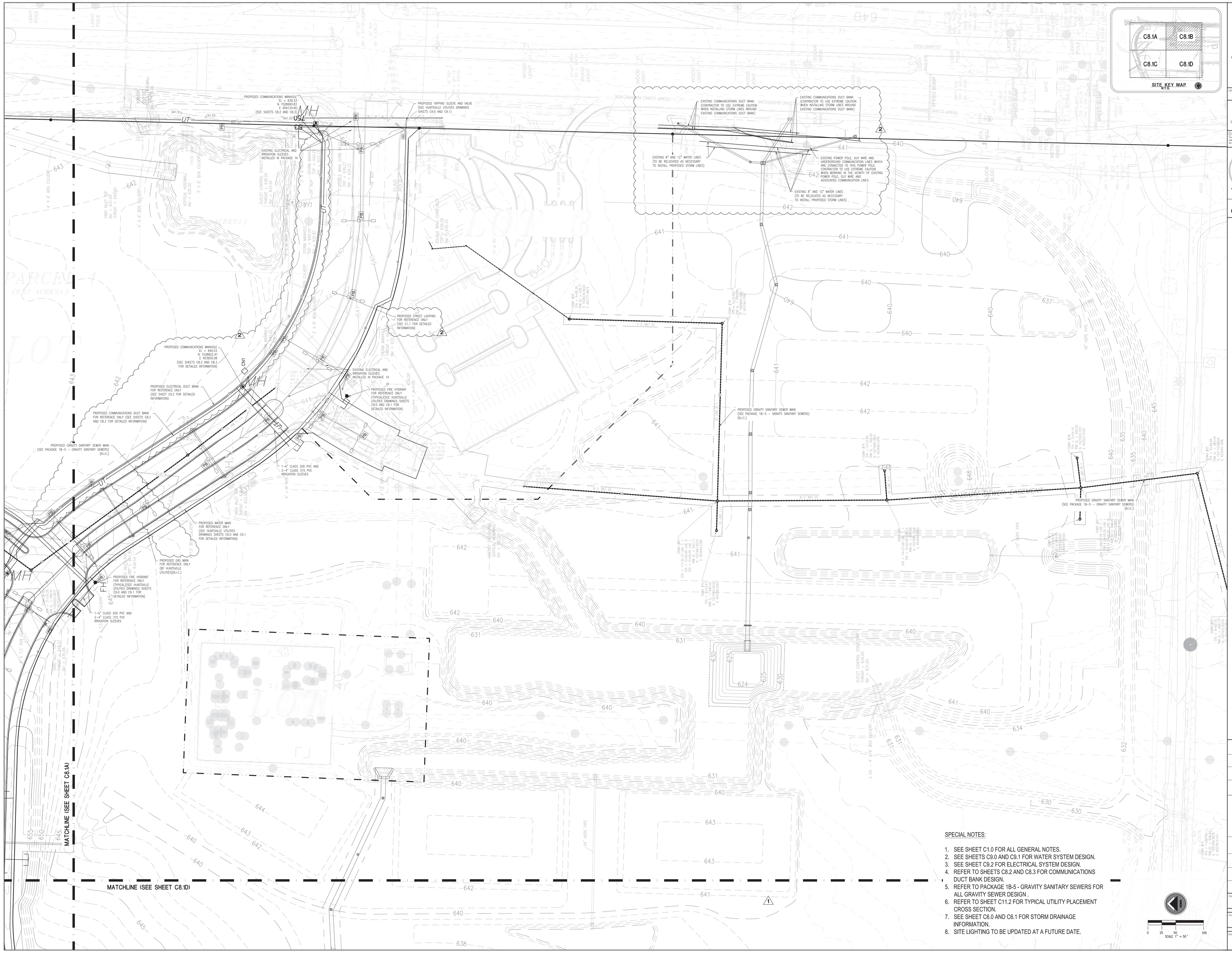

SITE KEY MAP
N.T.S.

C8.1A | C8.1B
C8.1C | C8.1D

SPECIAL NOTES:

1. SEE SHEET C1.0 FOR ALL GENERAL NOTES.
2. SEE SHEETS C9.0 AND C9.1 FOR WATER SYSTEM DESIGN.
3. SEE SHEET C9.2 FOR ELECTRICAL SYSTEM DESIGN.
4. REFER TO SHEETS C8.2 AND C8.3 FOR COMMUNICATIONS DUCT BANK DESIGN.
5. REFER TO PACKAGE 1B-5 - GRAVITY SANITARY SEWERS FOR ALL GRAVITY SEWER DESIGN .
6. REFER TO SHEET C11.2 FOR TYPICAL UTILITY PLACEMENT CROSS SECTION.
7. SEE SHEET C6.0 AND C6.1 FOR STORM DRAINAGE INFORMATION.
8. SITE LIGHTING TO BE UPDATED AT A FUTURE DATE.

LBYD
Civil and Structural Engineers
Atlanta, Georgia
Birmingham, Alabama
Huntsville, Alabama
www.lbyd.com

LBYD Project Number
302-10-002A

LBYD, Inc.
305 Church Street SW
Suite 719
Huntsville, AL 35801
Phone (256) 533-1575
Fax (256) 533-1744

copyright 2010
These drawings and design intent are the sole property of the City of Huntsville which may not be reproduced without written permission.

ALABAMA REGISTERED No. 26754 PROFESSIONAL ENGINEER
08/25/2011

HUNTSVILLE
The Heart of Alabama

UTILITY PLAN
REDSTONE GATEWAY - PACKAGE 1B - ROADWAY AND UTILITIES
CITY OF HUNTSVILLE
HUNTSVILLE, ALABAMA

REV	DATE	DRAWN	CHECKED	DESCRIPTION	TRAFFIC	FLOOD CON. ENGR	PT.	DRAINAGE
2	8/25/11	TEC	TAR	POWER & COMM ON BOULD. "A"				
1	7/22/11	BSJ	TAR	ROADWAY MODIFICATIONS				

Date: 04/12/2011

Checked By: RAN
Drawn By: BSJ

Sheet Number: C8.1B
Sequence: 22
Total: 48

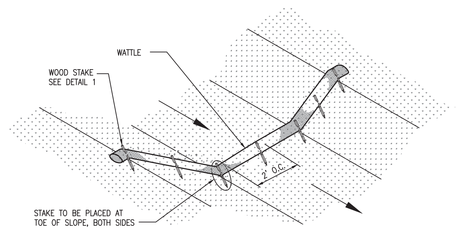

Wattle Spacing

REFER TO ALDOT SPECIAL DRAWING NO. ESC-300 FOR RECOMMENDED PLACEMENT INTERVAL BETWEEN WATTLES

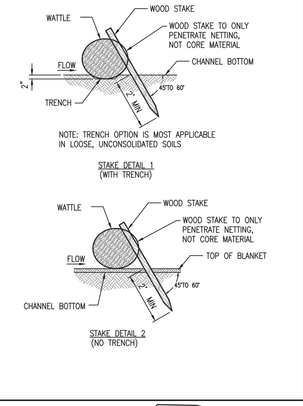

CdW Wattle Check Dam

N.T.S.

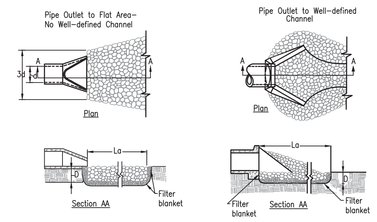

SPECIAL NOTES:
1. RIP RAP DISCHARGE APRON SHALL BE INSTALLED AT A ZERO SLOPE.
2. A FILTER BLANKET OR FILTER FABRIC SHOULD BE INSTALLED BETWEEN THE RIPRAP AND SOIL FOUNDATION.
3. DEPTH OF APRON SHALL BE NO LESS THAN 6".
4. FOR DETERMINING APRON LENGTH, WIDTH, AND MEDIAN STONE SIZE, REFER TO FIGURES OP-2 AND OP-3 FROM THE LATEST ALABAMA EROSION CONTROL HANDBOOK.
5. THE GRADATION OF RIPRAP SHALL BE PER TABLES OP-2 AND OP-3 FROM THE LATEST ALABAMA EROSION CONTROL HANDBOOK.

OP Outlet Protection

N.T.S.

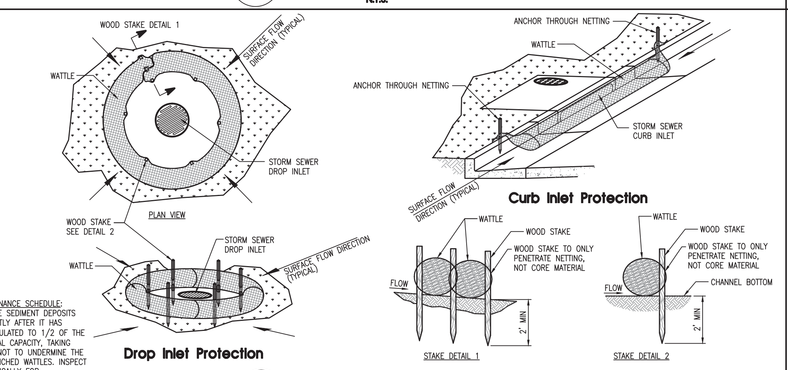

Drop Inlet Protection

Curb Inlet Protection

NOTE:
WATTLES MAY BE A STRAW WATTLE, A MULCH WATTLE, OR APPROVED EQUAL. STONE WATTLES SHALL BE USED FOR CURB INLETS ADJACENT TO PAVING.

WIP Wattle Inlet Protection

N.T.S.

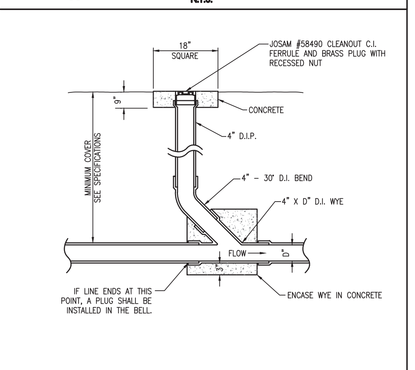

Traffic Rated Cleanout Detail

N.T.S.

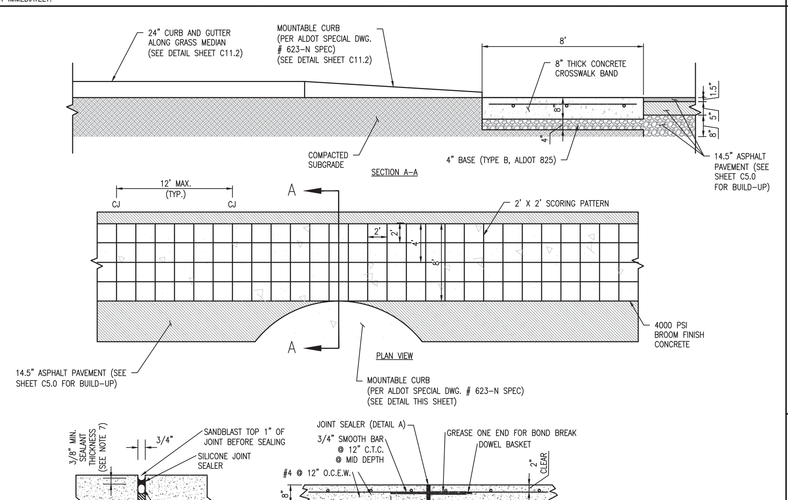

NOTES:
1. CONCRETE SURFACE SHALL BE BROOM FINISH
2. CONTRACTOR SHALL INSTALL 4" OF CRUSHED AGGREGATE BASE COURSE, TYPE B (ALDOT 825) UNDER ALL CONCRETE PAVING
3. CONCRETE SHALL HAVE 4000 PSI AT 28 DAYS
4. CONTRACTOR SHALL INSTALL CONTROL JOINTS IN CONCRETE PAVING AT 12' MAX SPACING BOTH WAYS.
5. CONTROL JOINT TO BE 1/4 OF THE SLAB THICKNESS TYPICALLY.
6. EXPANSION JOINTS AT POUR BREAKS AND 100' MAX SPACING. COORDINATE WITH CONTROL JOINTS.
7. CONTRACTOR TO FOLLOW MANUFACTURERS RECOMMENDATIONS.

Boulevard Concrete Crosswalk Detail

N.T.S.

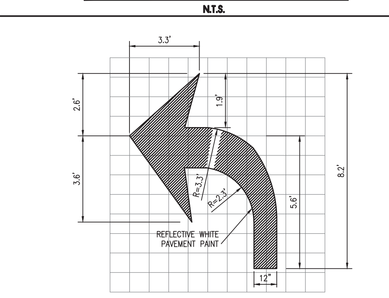

Painted Turn Arrow

N.T.S.

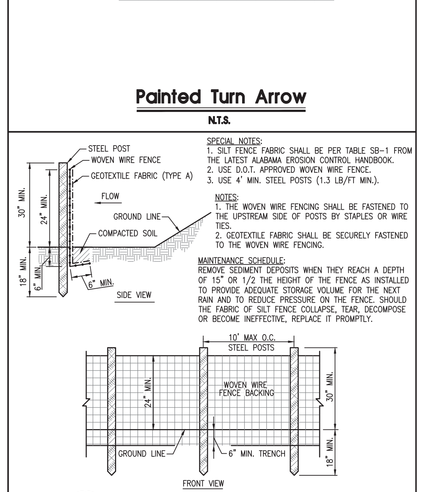

SPECIAL NOTES:
1. SILT FENCE FABRIC SHALL BE PER TABLE SB-1 FROM THE LATEST ALABAMA EROSION CONTROL HANDBOOK.
2. USE D.O.T. APPROVED WOVEN WIRE FENCE.
3. USE 4' MIN. STEEL POSTS (1.3 LB/FT MIN.).

NOTES:
1. THE WOVEN WIRE FENCING SHALL BE FASTENED TO THE UPSTREAM SIDE OF POSTS BY STAPLES OR WIRE TIES.
2. GEOTEXTILE FABRIC SHALL BE SECURELY FASTENED TO THE WOVEN WIRE FENCING.

MAINTENANCE SCHEDULE:
REMOVE SEDIMENT DEPOSITS WHEN THEY REACH A DEPTH OF 15" OR 1/2 THE HEIGHT OF THE FENCE AS INSTALLED TO PROVIDE ADEQUATE STORAGE VOLUME FOR THE NEXT RAIN AND TO REDUCE PRESSURE ON THE FENCE. SHOULD THE FABRIC OF SILT FENCE COLLAPSE, TEAR, DECOMPOSE OR BECOME INEFFECTIVE, REPLACE IT PROMPTLY.

SB Silt Fence - Type A

N.T.S.

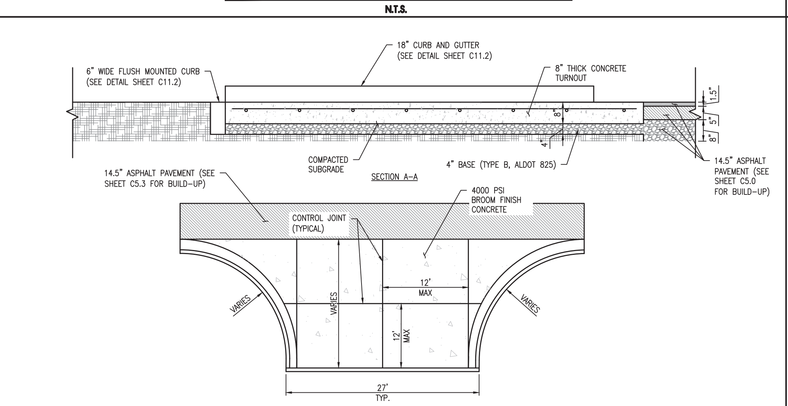

NOTES:
1. CONCRETE SURFACE SHALL BE BROOM FINISH
2. CONTRACTOR SHALL INSTALL 4" OF CRUSHED AGGREGATE BASE COURSE, TYPE B (ALDOT 825) UNDER ALL CONCRETE PAVING
3. CONCRETE SHALL HAVE 4000 PSI AT 28 DAYS
4. CONTRACTOR SHALL INSTALL CONTROL JOINTS IN CONCRETE PAVING AT 12' MAX SPACING BOTH WAYS.
5. CONTROL JOINT TO BE 1/4 OF THE SLAB THICKNESS TYPICALLY.
6. EXPANSION JOINTS AT POUR BREAKS AND 100' MAX SPACING. COORDINATE WITH CONTROL JOINTS.
7. CONTRACTOR TO FOLLOW MANUFACTURERS RECOMMENDATIONS.

Concrete Turnout Detail

N.T.S.

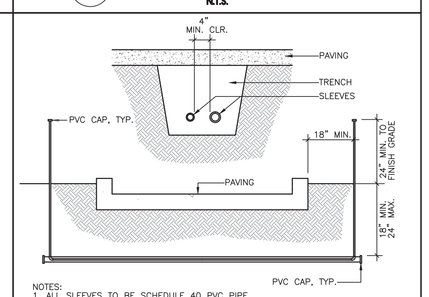

NOTES:
1. ALL SLEEVES TO BE SCHEDULE 40 PVC PIPE
2. ALL JOINTS TO BE SOLVENT WELDED AND WATER TIGHT
3. WHERE THERE IS MORE THAN ONE SLEEVE, EXTEND THE SMALLER SLEEVE TO 24-INCHES MIN. ABOVE FINISH GRADE.
4. MECHANICALLY TAMP TO 95% COMPACTION

Irrigation Sleeving Detail

N.T.S.

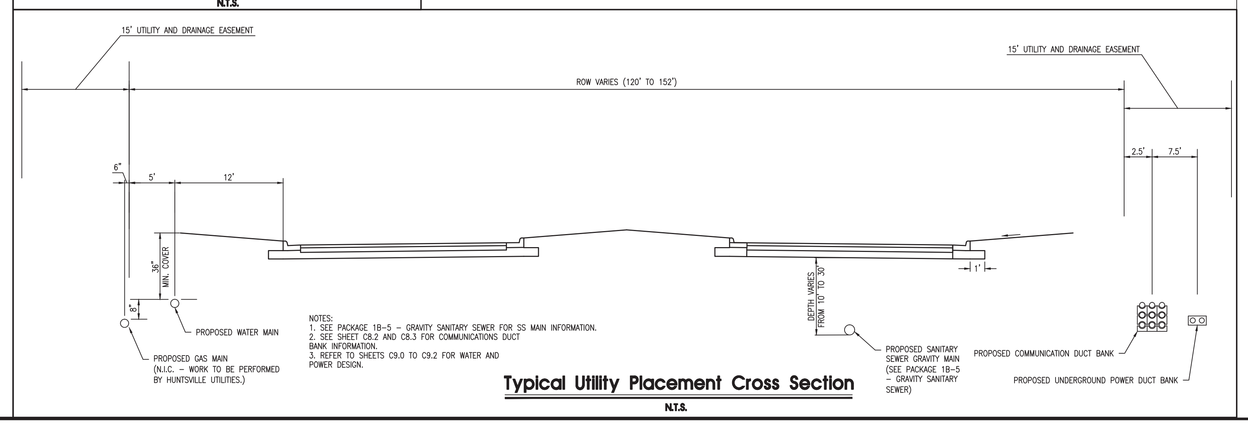

NOTES:
1. SEE PACKAGE 1B-5 - GRAVITY SANITARY SEWER FOR SS MAIN INFORMATION.
2. SEE SHEET C8.2 AND C8.3 FOR COMMUNICATIONS DUCT BANK INFORMATION.
3. REFER TO SHEETS C9.0 TO C9.2 FOR WATER AND POWER DESIGN.

Typical Utility Placement Cross Section

N.T.S.

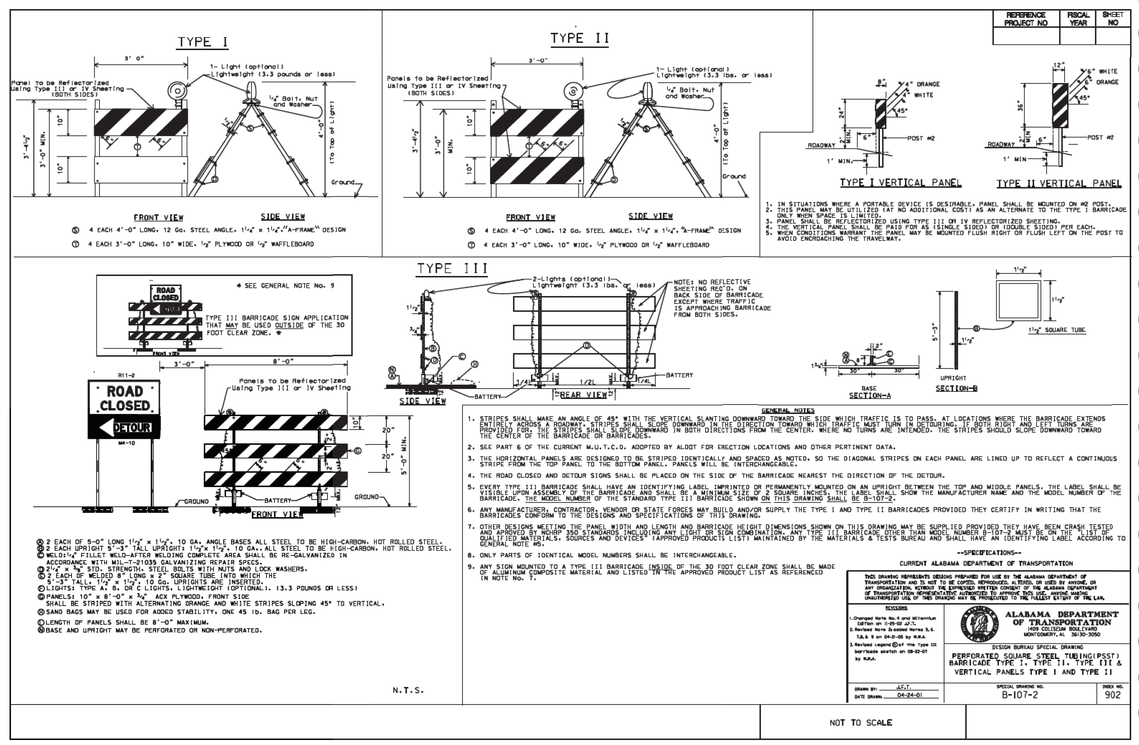

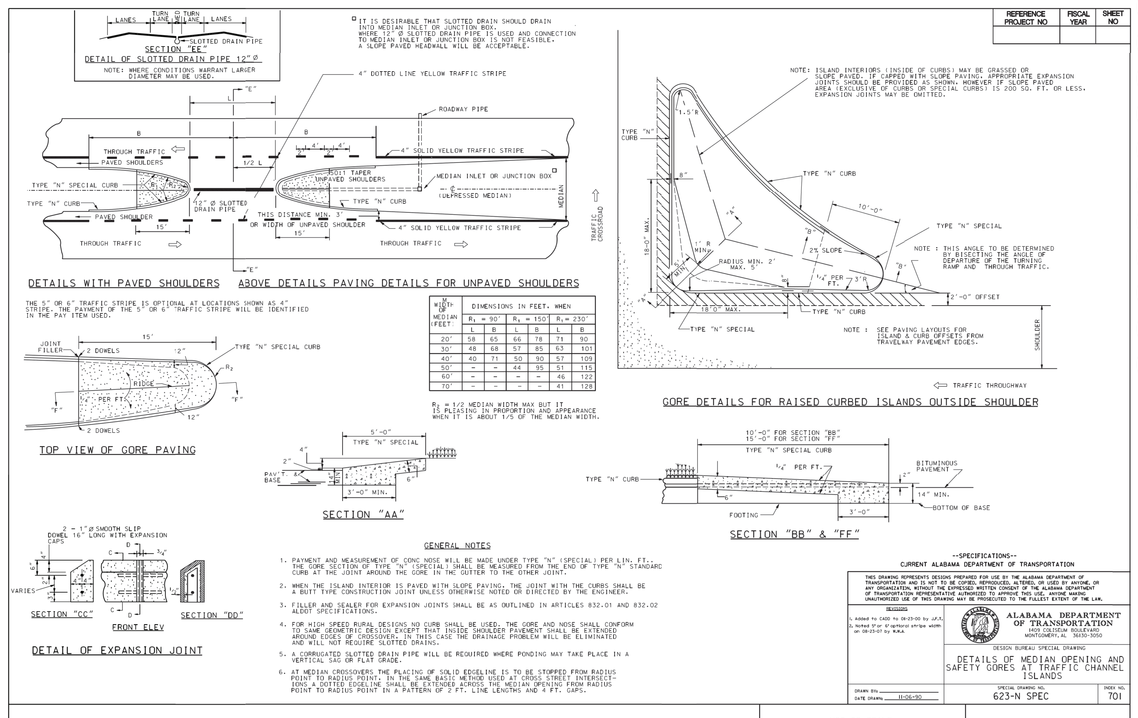

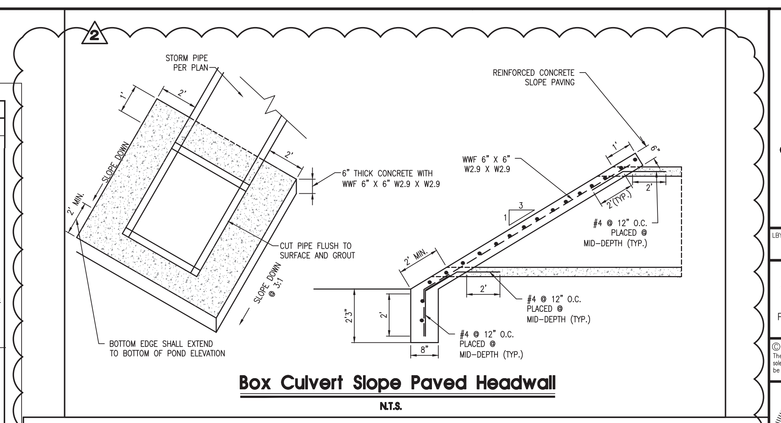

Box Culvert Slope Paved Headwall

N.T.S.

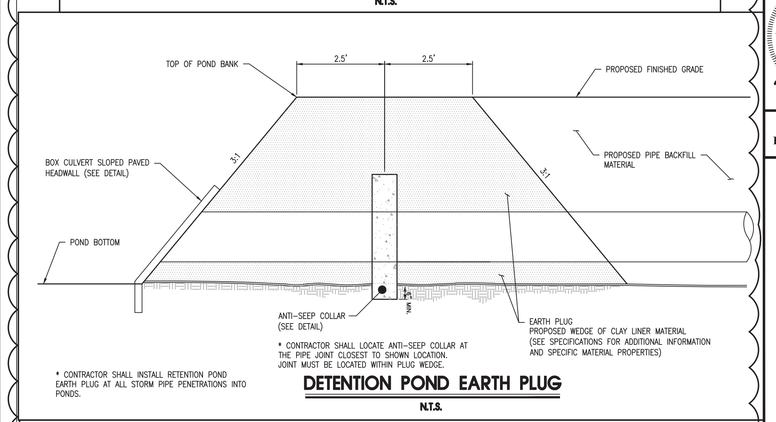

* CONTRACTOR SHALL INSTALL RETENTION POND EARTH PLUG AT ALL STORM PIPE PENETRATIONS INTO PONDS.

* CONTRACTOR SHALL LOCATE ANTI-SEEP COLLAR AT THE PIPE JOINT CLOSEST TO SHOWN LOCATION. JOINT MUST BE LOCATED WITHIN PLUG WEDGE.

DETENTION POND EARTH PLUG

N.T.S.

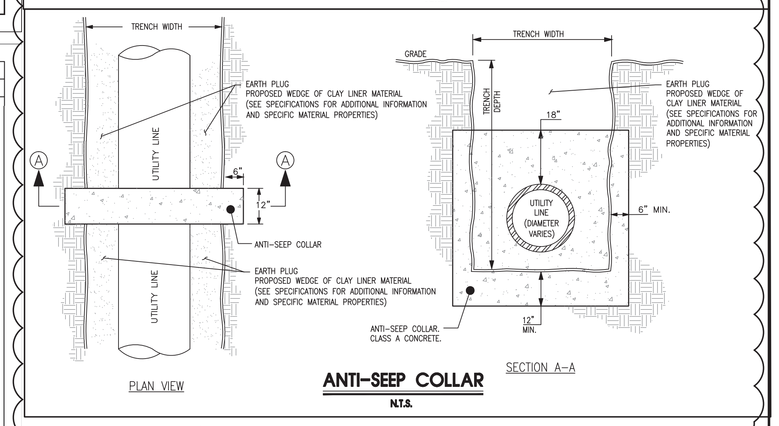

ANTI-SEEP COLLAR

N.T.S.

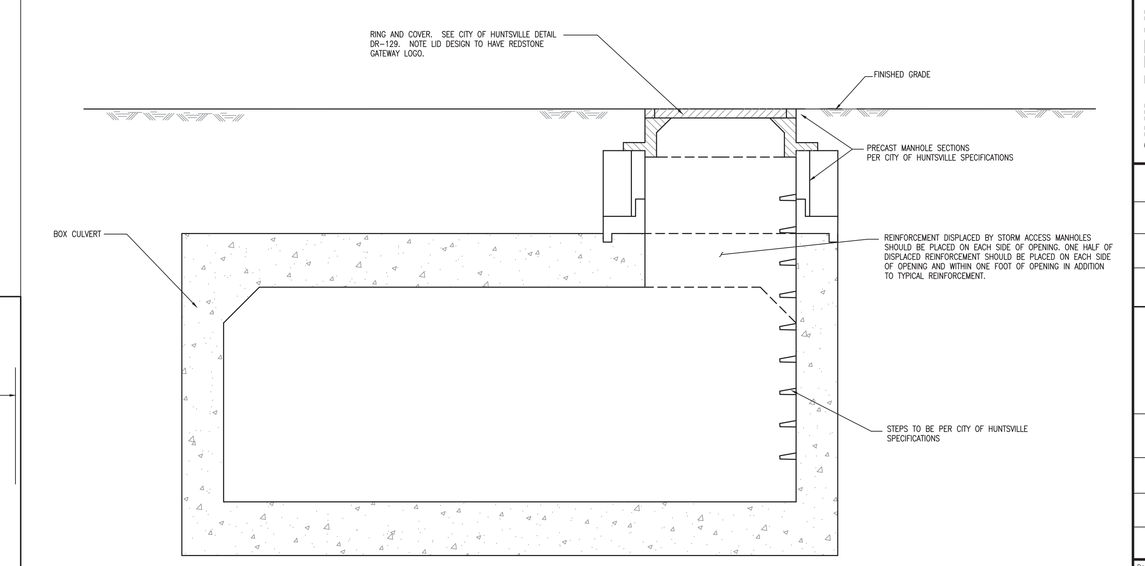

STORM ACCESS MANHOLE

N.T.S.

LBYD
Civil and Structural Engineers
Atlanta, Georgia
Birmingham, Alabama
Huntsville, Alabama
www.lbyd.com
LBYD Project Number
302-10-002A
LBYD, Inc.
305 Church Street SW
Suite 719
Huntsville, AL 35801
Phone (256) 533-1575
Fax (256) 533-1744

© copyright 2010
These drawings and design intent are the sole property of the City of Huntsville which may not be reproduced without written permission.

ALABAMA REGISTERED No. 26754 PROFESSIONAL ENGINEER
08/25/2011
HUNTSVILLE The Heart of Alabama

CIVIL DETAILS
REDSTONE GATEWAY - PACKAGE 1B - ROADWAY AND UTILITIES
CITY OF HUNTSVILLE
HUNTSVILLE, ALABAMA

REV	DATE	DRAWN	CHECKED	DESCRIPTION	TRAFFIC	F.E.	DRAINAGE
2	8/25/11	TRE	TWT	STORM SEWER DETAIL			
1	7/22/11	BSJ	TWT	ROADWAY MODIFICATIONS			

MAIN. COV. REVIEW

Date 04/12/2011
Checked By RAN
Drawn By BSJ
Sheet Number C11.2
Sequence 39
Total 48

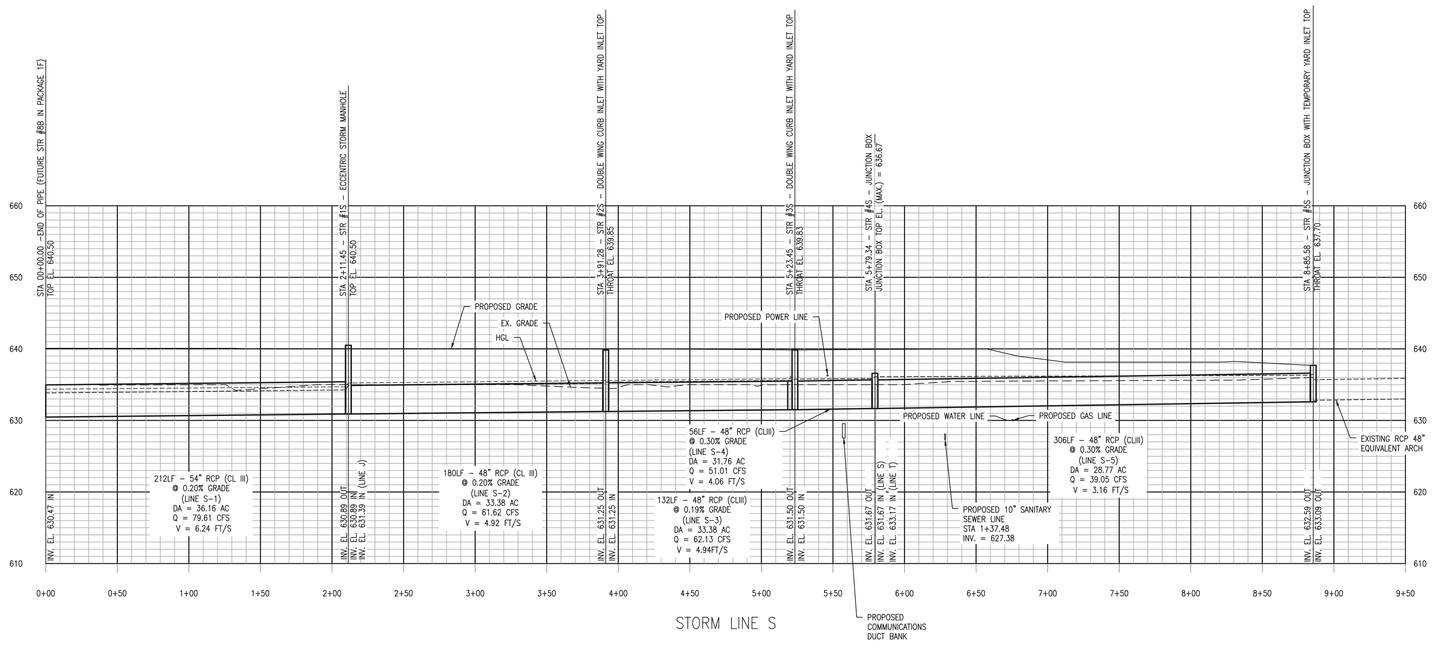

STORM LINE S

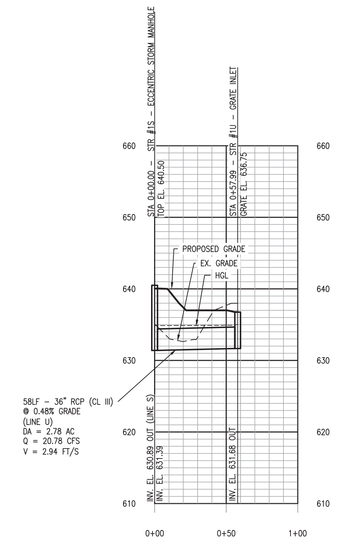

STORM LINE U

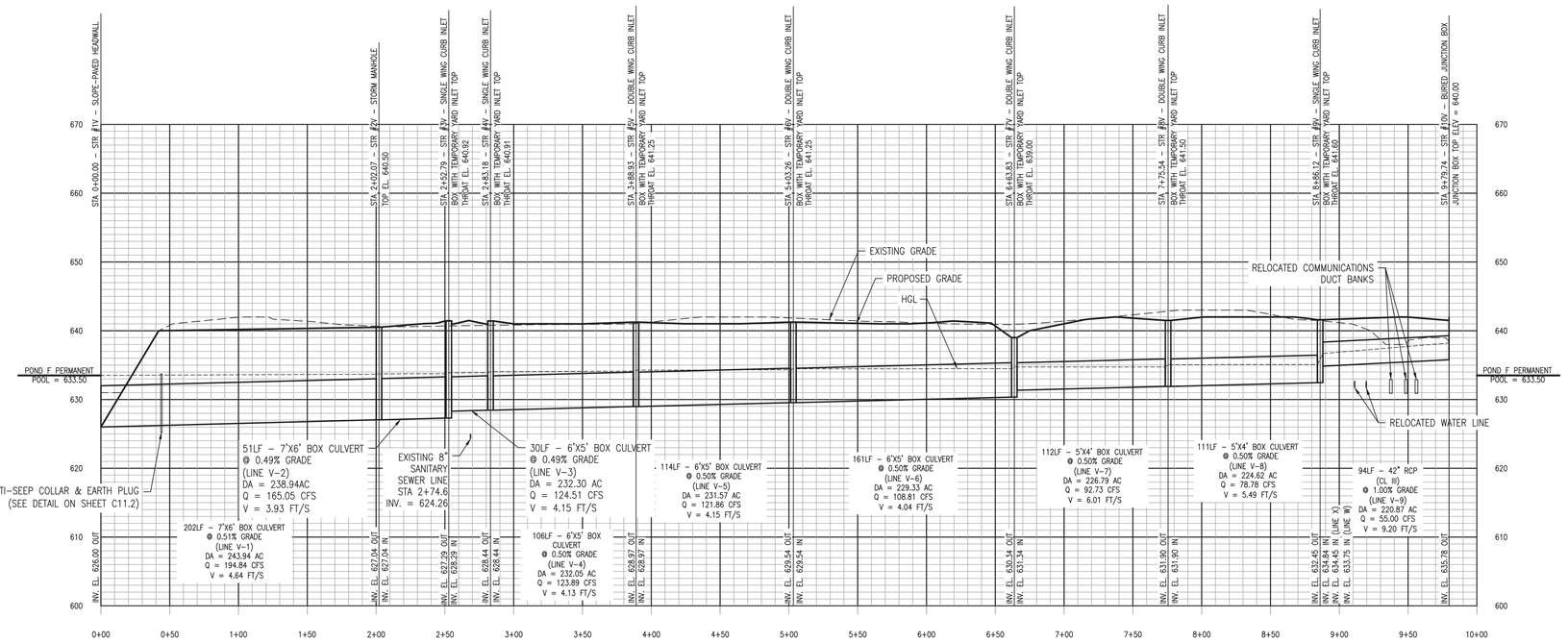

STORM LINE V

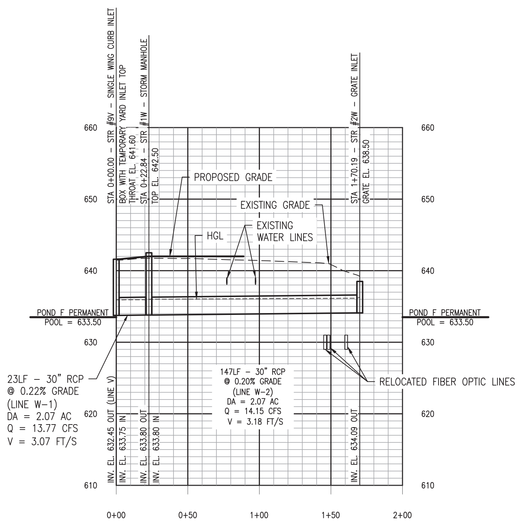

STORM LINE W

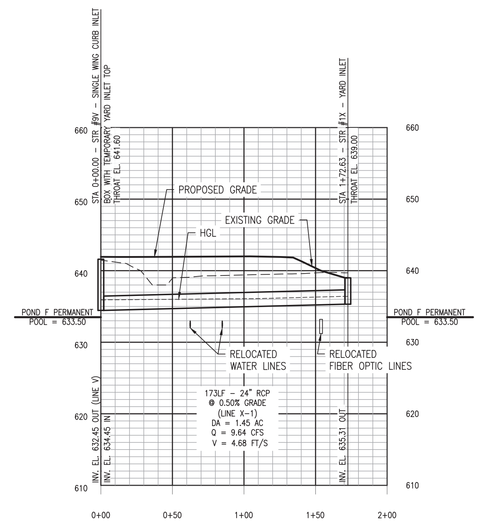

STORM LINE X

SPECIAL NOTES:
1. PIPES SIZED FOR THE 25-YEAR STORM
2. SEE SHEETS C6.0 FOR STORM PIPE LAYOUT INFORMATION AND GRADING

NOTE:
* SEE SHEET C6.1 FOR ADDITIONAL STORM PROFILES.

SCALE:
1"=50' HORIZONTAL
1"=10' VERTICAL
HGL
EXISTING GRADE
PROPOSED GRADE
STORM SEWER

REV	DATE	DRAWN	CHECKED	DESCRIPTION
2	8/25/11	TBE	RAN	ADDED STORM LINE S, U, & X

REV	DATE	BY	CHANGE

LBYD
Civil and Structural Engineers
Atlanta, Georgia
Birmingham, Alabama
Huntsville, Alabama
www.lbyd.com

LBYD Project Number
302-10-002A

LBYD, Inc.
305 Church Street SW
Suite 719
Huntsville, AL 35801
Phone (256) 533-1575
Fax (256) 533-1744

© copyright 2010
These drawings and design intent are the sole property of the City of Huntsville which may not be reproduced without written permission.

ALABAMA REGISTERED No. 26754 PROFESSIONAL ENGINEER
08/25/2011

HUNTSVILLE The Heart of Alabama

STORM DRAINAGE PROFILES
REDSTONE GATEWAY - PACKAGE 1B - ROADWAY AND UTILITIES
CITY OF HUNTSVILLE
HUNTSVILLE, ALABAMA

Date: 08/25/2011
Checked By: RAN
Drawn By: TBE
Sheet Number: C15.0
Sequence: 45 / 48