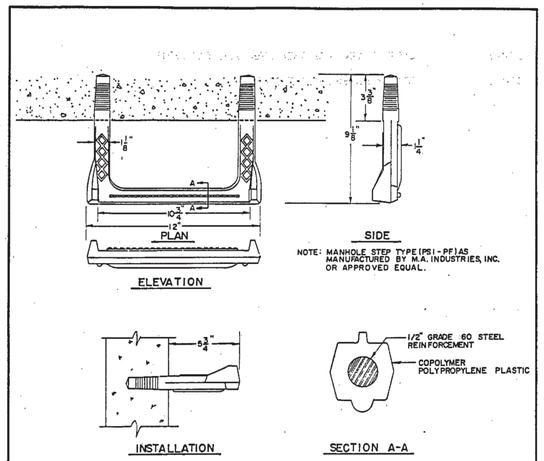

INLET STEP DETAILS

REVISIONS			CITY OF HUNTSVILLE
DESCRIPTION	NAME	DATE	STANDARD LADDER BAR DETAIL
DIRECTOR		DATE	ENGINEER OF PUBLIC WORKS CITY OF HUNTSVILLE, ALABAMA — DR-100 DRAWING NO.

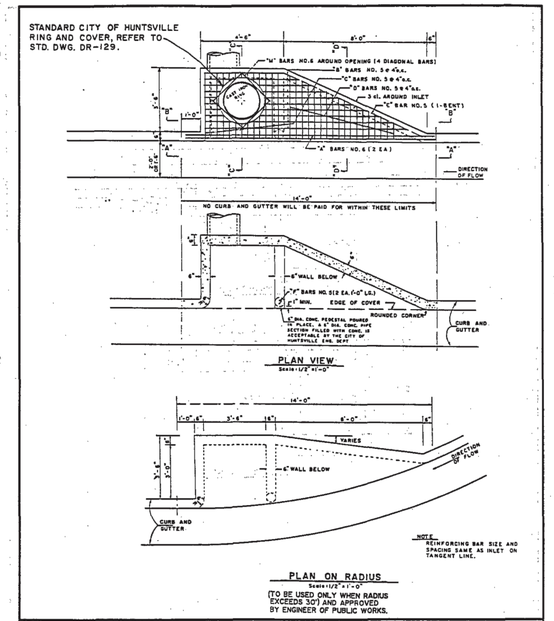

REVISIONS			CITY OF HUNTSVILLE
DESCRIPTION	NAME	DATE	"S" TYPE INLET DETAILS
DIRECTOR		DATE	ENGINEER OF PUBLIC WORKS CITY OF HUNTSVILLE, ALABAMA — DR-120A DRAWING NO.

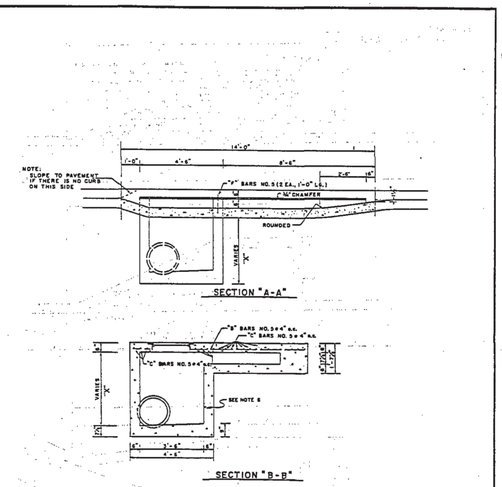

REVISIONS			CITY OF HUNTSVILLE
DESCRIPTION	NAME	DATE	"S" TYPE INLET DETAILS
DIRECTOR		DATE	ENGINEER OF PUBLIC WORKS CITY OF HUNTSVILLE, ALABAMA — DR-120B DRAWING NO.

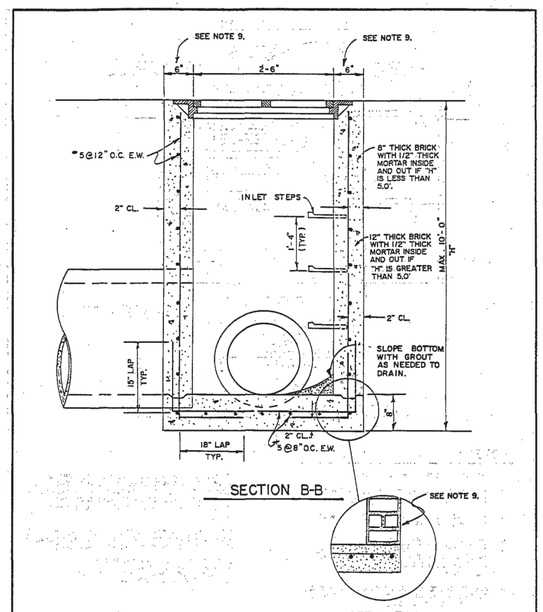

SECTION B-B

DETAIL TWO

REVISIONS			CITY OF HUNTSVILLE
DESCRIPTION	NAME	DATE	OPEN GRATE INLET BOX DETAIL NON-TRAFFIC TYPE
DIRECTOR		DATE	ENGINEER OF PUBLIC WORKS CITY OF HUNTSVILLE, ALABAMA — DR-126B DRAWING NO.

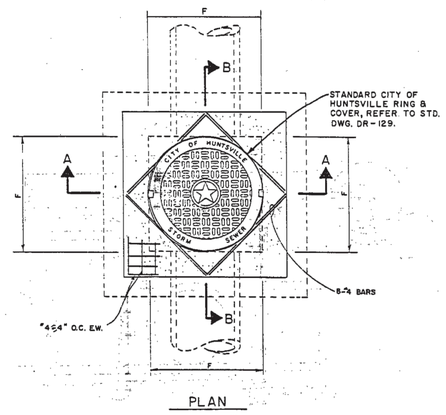

PLAN

NOTES:

1. DIMENSION "A" IS DETERMINED BY THE LARGEST DIAMETER PIPE ENTERING THE OPEN THOAT INLET.
2. STEPS ARE REQUIRED ON ALL INLETS WHEN DIMENSION FROM BOTTOM SLAB FLOW LINE TO TOP OF TOP SLAB IS GREATER THAN 4'-0".
3. ALL CONCRETE SHALL BE CLASS "A" AND SHALL DEVELOP A MINIMUM COMPRESSIVE STRENGTH OF 3000 PSI IN 28 DAYS.
4. REINFORCING SHALL BE INTERMEDIATE GRADE DEFORMED BARS AND SHALL CONFORM TO THE REQUIREMENTS OF THE STANDARD SPECIFICATIONS FOR BILLET STEEL CONCRETE REINFORCEMENT BARS, ASTM A-15 AND DEFORMATIONS CONFORMING TO ASTM A - 305.
5. WHEN BRICK CONSTRUCTION IS USED, WALLS WILL BE 8" BRICK WHEN "H" IS LESS THAN 5'-0". USE 12" BRICK WHEN "H" IS MORE THAN 5'-0". 1/2" THICK MORTAR ON BOTH SIDES.
6. PROVIDE CONCRETE APRON AT THROAT OPENINGS.

REVISIONS			CITY OF HUNTSVILLE
DESCRIPTION	NAME	DATE	OPEN THROAT INLET DETAIL
DIRECTOR		DATE	ENGINEER OF PUBLIC WORKS CITY OF HUNTSVILLE, ALABAMA — DR-127A DRAWING NO.

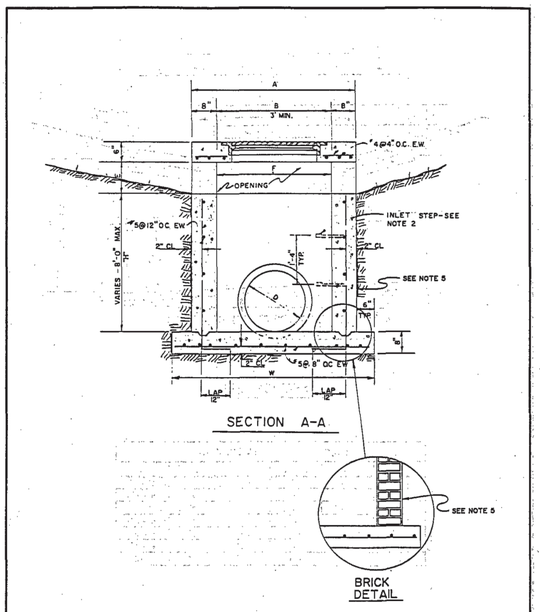

SECTION A-A

BRICK DETAIL

REVISIONS			CITY OF HUNTSVILLE
DESCRIPTION	NAME	DATE	OPEN THROAT INLET DETAIL
DIRECTOR		DATE	ENGINEER OF PUBLIC WORKS CITY OF HUNTSVILLE, ALABAMA — DR-127B DRAWING NO.

NOTE:
NOT ALL CITY OF HUNTSVILLE DETAILS ARE SHOWN. THE CONTRACTOR SHALL REFER TO THE CITY OF HUNTSVILLE ENGINEERING STANDARDS FOR THE CONSTRUCTION OF PUBLIC IMPROVEMENTS DATED MAY 1991 AND THE CITY OF HUNTSVILLE ENGINEERING DEPARTMENT "DESIGN AND ACCEPTANCE MANUAL FOR SANITARY SEWERS" DATED MARCH 2011 FOR ADDITIONAL INFORMATION.

LBYD
Civil and Structural Engineers
Birmingham, Alabama
Atlanta, Georgia
Huntsville, Alabama
Tampa Bay, Florida
www.lbyd.com

LBYD Project Number
302-10-002A

LBYD, Inc.
305 Church Street SW
Suite 719
Huntsville, AL 35801
Phone (256) 533-1575
Fax (256) 533-1744

© copyright 2011
These drawings and design intent are the sole property of City of Huntsville which may not be reproduced without written permission.

HUNTSVILLE
The Star of Alabama

DETAILS

REDSTONE GATEWAY - PACKAGE 1F
ROADWAY IMPROVEMENTS
CITY OF HUNTSVILLE
HUNTSVILLE, ALABAMA

REV	DATE	DRAWN	CHECKED	DESCRIPTION	TRAFFIC	REAL ESTATE	PE	DRAINAGE
DRAWN:	BSJ	CHECKED:	RAN	DATE: JANUARY 27, 2012	CONTROL REVIEW			

C14.0

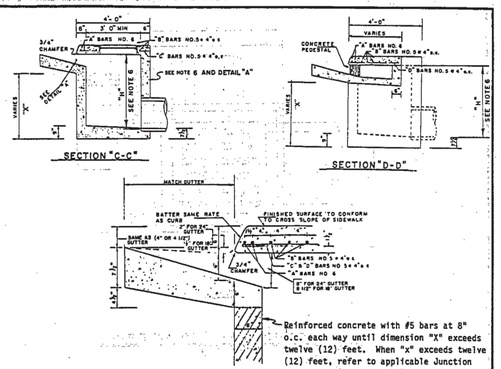

NOTES:

1. ALL CONCRETE SHALL BE CLASS "A" AND DEVELOP A MINIMUM COMPRESSIVE STRENGTH @ 3000 P.S.I. IN 28 DAYS.
2. ALL REINFORCING STEEL SHALL BE INTERMEDIATE GRADE DEFORMED BARS AND SHALL CONFORM TO THE REQUIREMENTS OF THE "STANDARD SPECIFICATIONS FOR BILLET STEEL CONCRETE REINFORCEMENT BARS", ASTM A-15, AND DEFORMATIONS SHALL CONFORM TO ASTM A-305.
3. STEPS SHALL BE REQUIRED WHEN DIMENSION "X" EXCEEDS 3'-6".
4. TO ACCOMODATE LARGE DIAMETER PIPE, OR TO FIT OTHER CONDITIONS IT MAY BE NECESSARY TO INCREASE ONE OR BOTH PLAN DIMENSIONS OF THE INLET BOX AND COVER SLAB.
5. PIPES MAY CONNECT WITH INLETS FROM ANY DIRECTION AND AS MANY CONNECTIONS SHALL BE MADE AS ARE NECESSARY.
6. When brick construction is used, walls will be 8" thick brick with ½" thick mortar inside and out when dimension "x" is less than or equal to 5'-0". When "x" exceeds 5'-0" but less than 12'-0", walls shall be twelve (12) inch thick brick with ½" mortar inside and out. Brick construction will not be permitted if dimension "x" exceeds twelve (12) feet.

REVISIONS			CITY OF HUNTSVILLE
DESCRIPTION	NAME	DATE	"S" TYPE INLET DETAILS
DIRECTOR		DATE	ENGINEER OF PUBLIC WORKS CITY OF HUNTSVILLE, ALABAMA — DR-120C DRAWING NO.

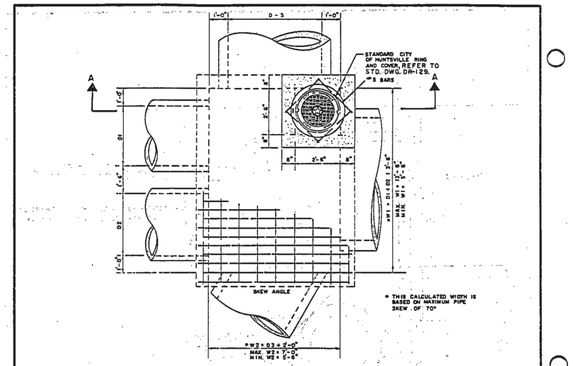

JUNCTION BOX FOR - 27" TO 60" PIPES

NOTES:

1. MIN. SIZE OF JUNCTION BOX IS 2'-6" x 2'-6".
2. MAX. SIZE OF A JUNCTION BOX IS 7'-0" (W2) x 13'-6" (W1) FOR 27" TO 60" PIPES.
3. MAX. SIZE OF A JUNCTION BOX IS 2'-6" x 2'-6" FOR 15" TO 24" PIPES.
4. MAX. HEIGHT OF A JUNCTION BOX IS AS SHOWN.
5. JUNCTION BOXES GREATER THAN 7'-0" x 13'-6" x 12'-0" SHALL BE A SPECIAL DESIGNED JUNCTION BOX.
6. ALL CONCRETE SHALL BE CLASS "A" AND SHALL DEVELOP A MINIMUM COMPRESSIVE STRENGTH OF 3000 PSI IN 28 DAYS.
7. REINFORCING SHALL BE INTERMEDIATE GRADE DEFORMED BARS AND SHALL CONFORM TO THE REQUIREMENTS OF THE STANDARD SPECIFICATIONS FOR BILLET STEEL CONCRETE REINFORCEMENT BARS, ASTM A-15 AND DEFORMATIONS CONFORMING TO ASTM A-305.
8. STEPS ARE REQUIRED ON ALL JUNCTION BOXES WHEN DIMENSION FROM BOTTOM SLAB FLOW LINE TO TOP OF TOP SLAB IS GREATER THAN 4'-0".

REVISIONS			CITY OF HUNTSVILLE
DESCRIPTION	NAME	DATE	JUNCTION BOX FOR-27" TO 60" PIPES TRAFFIC TYPE
DIRECTOR		DATE	ENGINEER OF PUBLIC WORKS CITY OF HUNTSVILLE, ALABAMA — DR-141A DRAWING NO.

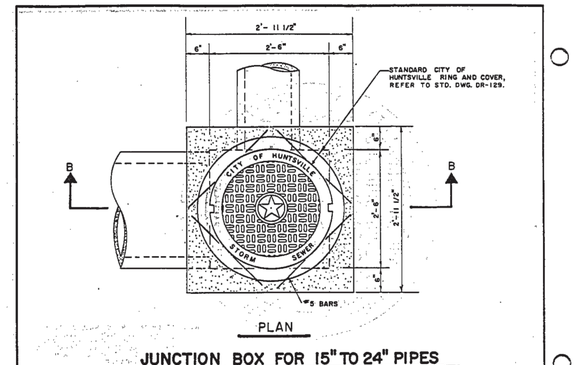

JUNCTION BOX FOR 15" TO 24" PIPES

NOTES:

1. MIN. SIZE OF JUNCTION BOX IS 2'-6" x 2'-6".
2. MAX. SIZE OF A JUNCTION BOX IS 7'-0" (W2) x 13'-6" (W1) FOR 27" TO 60" PIPES.
3. MAX. SIZE OF A JUNCTION BOX IS 2'-6" x 2'-6" FOR 15" TO 24" PIPES.
4. MAX. HEIGHT OF A JUNCTION BOX IS AS SHOWN.
5. JUNCTION BOXES GREATER THAN 7'-0" x 13'-6" x 12'-0" SHALL BE A SPECIAL DESIGNED JUNCTION BOX.
6. ALL CONCRETE SHALL BE CLASS "A" AND SHALL DEVELOP A MINIMUM COMPRESSIVE STRENGTH OF 3000 PSI IN 28 DAYS.
7. REINFORCING SHALL BE INTERMEDIATE GRADE DEFORMED BARS AND SHALL CONFORM TO THE REQUIREMENTS OF THE STANDARD SPECIFICATIONS FOR BILLET STEEL CONCRETE REINFORCEMENT BARS, ASTM A-15 AND DEFORMATIONS CONFORMING TO ASTM A-305.
8. STEPS ARE REQUIRED ON ALL JUNCTION BOXES WHEN DIMENSION FROM BOTTOM SLAB FLOW LINE TO TOP OF TOP SLAB IS GREATER THAN 4'-0".

REVISIONS			CITY OF HUNTSVILLE
DESCRIPTION	NAME	DATE	JUNCTION BOX FOR-15" TO 24" PIPES TRAFFIC TYPE
DIRECTOR		DATE	ENGINEER OF PUBLIC WORKS CITY OF HUNTSVILLE, ALABAMA — DR-140A DRAWING NO.

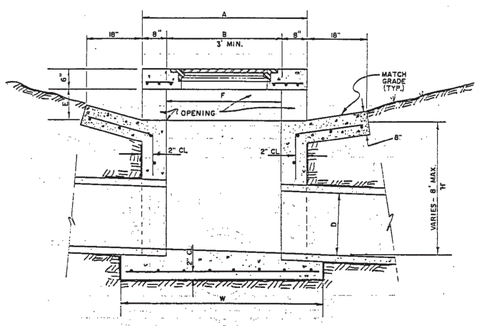

INLET DIMENSIONS					
PIPE SIZE	A	B & F	D	E	W
12"	4'-4"	3'	12"	8"	5'-4"
15"	4'-4"	3'	15"	8"	5'-4"
18"	4'-4"	3'	18"	8"	5'-4"
21"	4'-6"	3'-2"	21"	8"	5'-6"
24"	4'-9"	3'-5"	24"	8"	5'-9"
30"	5'-4"	4'	30"	8"	6'-4"
36"	5'-10"	4'-8"	36"	8"	6'-10"

REVISIONS			CITY OF HUNTSVILLE
DESCRIPTION	NAME	DATE	OPEN THROAT INLET DETAIL
DIRECTOR		DATE	ENGINEER OF PUBLIC WORKS CITY OF HUNTSVILLE, ALABAMA — DR-127C DRAWING NO.

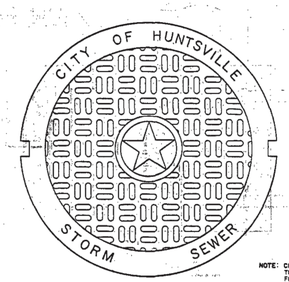

NOTE: COVER AND FRAME SHALL CONFORM TO THE REQUIREMENTS OF CLASS 30 FOR GRAY IRON CASTING, ASTM (A-48) FRAME & COVER SHALL BE CERTIFIED BY MFG. TO BE TRAFFIC BEARING WHEN APPLICABLE.

COVER DETAIL

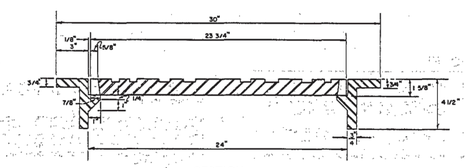

SECTION

LID DESIGN TO HAVE REDSTONE GATEWAY LOGO.

(SEE SHEET C14.2)

REVISIONS			CITY OF HUNTSVILLE
DESCRIPTION	NAME	DATE	RING AND COVER DETAIL
DIRECTOR		DATE	ENGINEER OF PUBLIC WORKS CITY OF HUNTSVILLE, ALABAMA — DR-129 DRAWING NO.

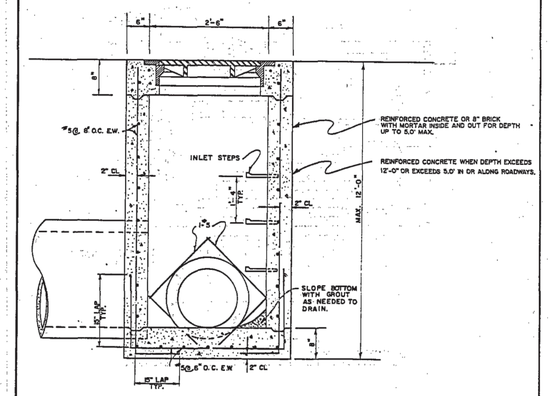

REVISIONS			CITY OF HUNTSVILLE
DESCRIPTION	NAME	DATE	JUNCTION BOX FOR-15" TO 24" PIPES TRAFFIC TYPE
DIRECTOR		DATE	ENGINEER OF PUBLIC WORKS CITY OF HUNTSVILLE, ALABAMA — DR-140B DRAWING NO.

NOTE:
NOT ALL CITY OF HUNTSVILLE DETAILS ARE SHOWN. THE CONTRACTOR SHALL REFER TO THE CITY OF HUNTSVILLE ENGINEERING STANDARDS FOR THE CONSTRUCTION OF PUBLIC IMPROVEMENTS DATED MAY 1991 AND THE CITY OF HUNTSVILLE ENGINEERING DEPARTMENT "DESIGN AND ACCEPTANCE MANUAL FOR SANITARY SEWERS" DATED MARCH 2011 FOR ADDITIONAL INFORMATION.

LBYD
Civil and Structural Engineers
Birmingham, Alabama
Atlanta, Georgia
Huntsville, Alabama
Tampa Bay, Florida
www.lbyd.com

LBYD Project Number
302-10-002A

LBYD, Inc.
305 Church Street SW
Suite 719
Huntsville, AL 35801
Phone (256) 533-1575
Fax (256) 533-1744

© copyright 2011
These drawings and design intent are the sole property of City of Huntsville which may not be reproduced without written permission.

HUNTSVILLE
The Star of Alabama

DETAILS

REDSTONE GATEWAY - PACKAGE 1F
ROADWAY IMPROVEMENTS
CITY OF HUNTSVILLE
HUNTSVILLE, ALABAMA

REV	DATE	DRAWN	CHECKED	DESCRIPTION	TRAFFIC	REAL ESTATE	PE	DRAINAGE
DRAWN: BSJ		CHECKED: RAN		DATE: JANUARY 27, 2012		COUNTY REVIEW		

C14.1

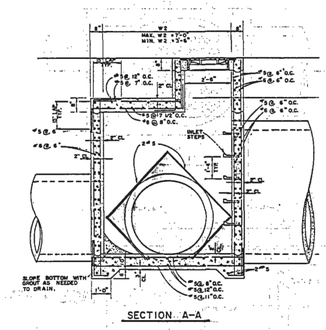

SECTION A-A

REVISIONS			CITY OF HUNTSVILLE
DESCRIPTION	NAME	DATE	JUNCTION BOX FOR-27" TO 60" PIPES TRAFFIC TYPE
DIRECTOR		DATE	ENGINEER OF PUBLIC WORKS CITY OF HUNTSVILLE, ALABAMA — DR-141 B DRAWING NO.

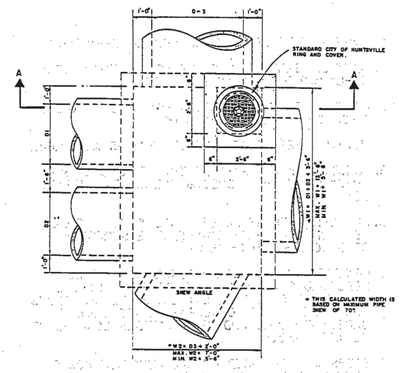

PLAN

REVISIONS			CITY OF HUNTSVILLE
DESCRIPTION	NAME	DATE	JUNCTION BOX (27"-60" PIPES) DETAIL NON-TRAFFIC TYPE
DIRECTOR		DATE	ENGINEER OF PUBLIC WORKS CITY OF HUNTSVILLE, ALABAMA — DR-143A DRAWING NO.

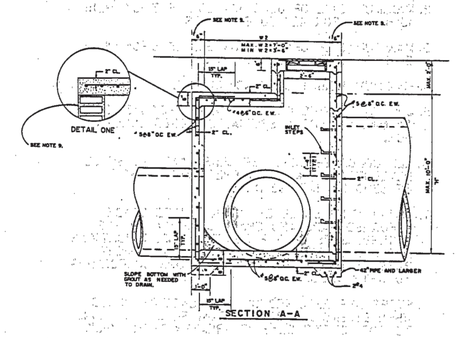

SECTION A-A

REVISIONS			CITY OF HUNTSVILLE
DESCRIPTION	NAME	DATE	JUNCTION BOX (27"-60" PIPES) DETAIL NON-TRAFFIC TYPE
DIRECTOR		DATE	ENGINEER OF PUBLIC WORKS CITY OF HUNTSVILLE, ALABAMA — DR-143B DRAWING NO.

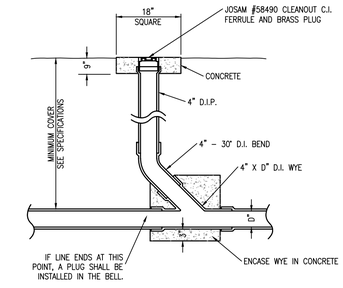

Typical Cleanout Detail

N.T.S.

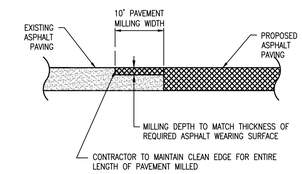

Asphalt Pavement Milling

N.T.S.

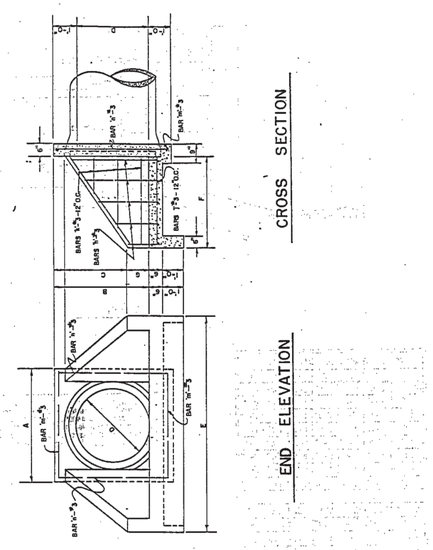

REVISIONS			CITY OF HUNTSVILLE
DESCRIPTION	NAME	DATE	CONCRETE HEADWALL DETAIL SINGLE PIPE
DIRECTOR		DATE	ENGINEER OF PUBLIC WORKS CITY OF HUNTSVILLE, ALABAMA — DR-150 B DRAWING NO.

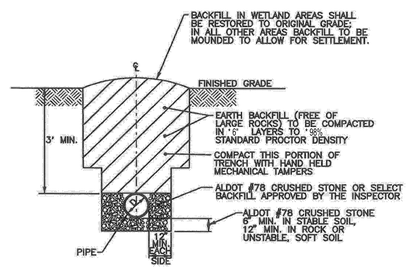

TYPICAL TRENCH DETAIL FOR DUCTILE IRON SANITARY SEWER PIPE IN NON-TRAFFIC AREA

NOT TO SCALE

NOTE: ALL EXCAVATION WORK SHALL BE IN COMPLIANCE WITH APPLICABLE REQUIREMENTS OF GOVERNING AUTHORITIES HAVING JURISDICTION

* MODIFIED FOR THIS PROJECT

CITY OF HUNTSVILLE	
TYPICAL TRENCH DETAIL FOR PIPE IN NON-TRAFFIC AREAS	
CITY ENGINEERING DIVISION CITY OF HUNTSVILLE, ALABAMA	SD-14A

REVISED NOVEMBER 2005

V-1355 ASSEMBLY

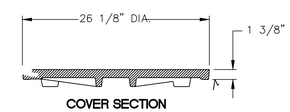

COVER SECTION

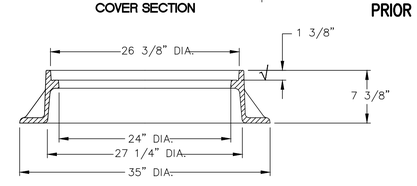

FRAME SECTION

PRODUCT NUMBER

41355046A01

DESIGN FEATURES

MATERIALS
COVER-GRAY IRON
ASTM A48 CL35B
FRAME-GRAY IRON
ASTM A48 CL35B

DESIGN LOAD
HEAVY DUTY

COATING
UNDIPPED

OPEN AREA
N/A

√ DESIGNATES MACHINE SURFACE

* OR APPROVED EQUAL – CONTRACTOR MUST SUBMITT AN EQUAL SHOP DRAWING PRIOR TO ANY ORDERING OR FABRICATION

REFERENCE INFORMATION

41355046
41355010

DRAWING DETAILS

ORIGINAL DRAWING: SMM 01/06/11
REVISED BY: SMM 02/01/11

Corporate Headquarters
301 Spring Street
PO Box 439
East Jordan, MI
49727-0439
800.874.4100

Call Today for More Information
800.626.4653 EJIW EAST JORDAN IRON WORKS EST 1883 WE COVER YOUR INFRASTRUCTURE™
www.ejiw.com MADE IN THE USA

• Weights (lbs./kg.), dimensions (inches/mm., and drawings provided for your guidance.
• We reserve the right to modify specifications without prior notice.

CONFIDENTIAL: This drawing is the property of East Jordan Iron works, Inc., and embodies confidential information, registered marks, trade secret information, and/or know how that is the property of East Jordan Iron Works, Inc. ©Copyright 2009 East Jordan Iron Works, Inc.

LBYD
Civil and Structural Engineers
Birmingham, Alabama
Atlanta, Georgia
Huntsville, Alabama
Tampa Bay, Florida
www.lbyd.com

LBYD Project Number
302-10-002A

LBYD, Inc.
305 Church Street SW
Suite 719
Huntsville, AL 35801
Phone (256) 533-1575
Fax (256) 533-1744

© copyright 2011
These drawings and design intent are the sole property of City of Huntsville which may not be reproduced without written permission.

ALABAMA REGISTERED No. 26754 PROFESSIONAL ENGINEER
1/27/2012

HUNTSVILLE The Star of Alabama

DETAILS

REDSTONE GATEWAY - PACKAGE 1F
ROADWAY IMPROVEMENTS
CITY OF HUNTSVILLE
HUNTSVILLE, ALABAMA

REV	DATE	DRAWN	CHECKED	DESCRIPTION	DATE: JANUARY 27, 2012	TRAFFIC	REAL ESTATE	PE	DRAINAGE
		BSJ	RAN				CON REVIEW		

C14.2

1. MINIMUM SIZE OF JUNCTION BOX IS 2'-6"x2'-6".
2. MAXIMUM SIZE OF JUNCTION BOX IS 7'-0" (W2)x 13'-6" (W1) FOR 42" TO 60" PIPES
3. MAXIMUM SIZE OF JUNCTION BOX IS 5'-0" (W2)x 9'-6"-(W1) FOR 15" TO 36" PIPES
4. MAXIMUM HEIGHT OF JUNCTION BOX IS AS SHOWN.
5. JUNCTION BOXES GREATER THAN 7'-6" x13'-6"x 12'-0" SHALL BE A SPECIAL DESIGNED JUNCTION BOX.
6. ALL CONCRETE SHALL BE CLASS "A" AND SHALL DEVELOP A MINIMUM COMPRESSIVE STRENGTH OF 3500 P.S.I. IN 28 DAYS.
* 7. ~~REINFORCING SHALL BE INTERMEDIATE GRADE DEFORMED BARS AND SHALL CONFORM TO THE REQUIREMENTS OF THE STANDARD SPECIFICATIONS FOR BILLET STEEL CONCRETE REINFORCEMENT BARS, ASTM A-15 AND DEFORMATIONS CONFORMING TO ASTM A-305.~~
8. STEPS ARE REQUIRED ON ALL JUNCTION BOXES WHEN DIMENSION FROM BOTTOM SLAB FLOW LINE TO TOP OF TOP SLAB IS GREATER THAN 4"-0".
9. BRICK CONSTRUCTION – WALL THICKNESS WILL BE 8" BRICK WHEN "H" IS LESS THAN 5'-0" AND 12" BRICK WHEN "H" IS MORE THAN 5'-0".1/2" MORTAR ON BOTH SIDES.

* REINFORCEMENT SHALL CONFORM TO THE STANDARD SPECIFICATIONS FOR DEFORMED AND PLAIN BILLET STEEL BARS FOR CONCRETE REINFORCEMENT (ASTM A 615)

REVISIONS			CITY OF HUNTSVILLE	
DESCRIPTION	NAME	DATE	GENERAL NOTES FOR NON-TRAFFIC TYPE JUNCTION BOXES	
DIRECTOR		DATE	ENGINEER OF PUBLIC WORKS CITY OF HUNTSVILLE, ALABAMA	DR-143C DRAWING NO.

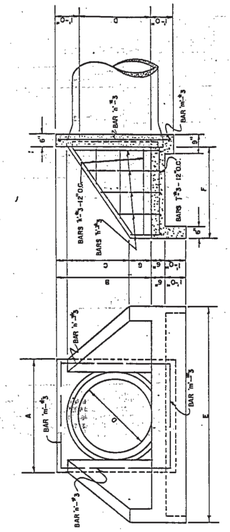

REVISIONS			CITY OF HUNTSVILLE	
DESCRIPTION	NAME	DATE	CONCRETE HEADWALL DETAIL SINGLE PIPE	
DIRECTOR		DATE	ENGINEER OF PUBLIC WORKS CITY OF HUNTSVILLE, ALABAMA	DR-150B DRAWING NO.

DIMENSIONS FOR ROUND PIPE

DIAMETER		OPEN AREA	2 TO 1 SLOPE			3 TO 1 SLOPE		
INCHES	FT. & IN.		B	C	D	B	C	D
8"	0'-8"	0.4	1'-6"	4'-8"	1'-0"	2'-2"	4'-8"	1'-0"
10"	0'-10"	0.5	1'-11"	4'-10"	1'-3"	2'-8"	4'-10"	1'-3"
12"	1'-0"	0.8	2'-5"	5'-0"	1'-6"	3'-2"	5'-0"	1'-6"
15"	1'-3"	1.2	2'-10"	5'-3"	1'-11"	4'-0"	5'-3"	1'-11"
18"	1'-6"	1.8	3'-3"	5'-6"	2'-3"	4'-9"	5'-6"	2'-3"
21"	1'-9"	2.4	3'-11"	5'-9"	2'-7½"	5'-7"	5'-9"	2'-7½"
24"	2'-0"	3.1	4'-6	6'-0"	3'-0"	6'-4	6'-0"	3'-0"
30"	2'-6"	4.9	5'-3"	6'-6"	3'-9"			
36"	3'-0"	7.1	6'-9"	7'-0"	4'-6"			
42"	3'-6"	9.6	7'-0"	7'-6"	5'-3"			
48"	4'-0"	12.6	9'-0"	8'-0"	6'-0"			
54"	4'-6"	15.9	10'-1"	8'-6"	6'-9"			
60"	5'-0"	19.6	11'-3"	9'-0"	7'-6"			
66"	5'-6"	23.8	12'-4"	9'-6	8'-3"			
72"	6'-0"	28.3	13'-5"	10'-0"	9'-0"			
78"	6'-6"	33.2	14'-7"	10'-6"	9'-9"			
84"	7'-0"	38.5	15'-8"	11'-0"	10'-6"			
90"	7'-6"	44.2	16'-10"	11'-6"	11'-3"			
96"	8'-0"	50.3	17'-11"	12'-0"	12'-0"			
102"	8'-6"	56.7	19'-0"	12'-9"	12'-6"			
108"	9'-0"	63.6	20'-2"	13'-6	13'-0"			
114"	9'-6"	70.9	21'-3"	14'-3"	13'-6"			
120"	10'-0"	78.5	22'-5"	15'-0"	14'-0"			
126"	10'-6"	86.6	23'-6	15'-9"	14'-6"			
132"	11'-0"	95.0	24'-8"	16'-6"	15'-0"			
138"	11'-6"	103.9	25'-9"	17'-3"	15'-6"			
144"	12'-0"	113.1	26'-10"	18'-0"	16'-0"			
150"	12'-6"	122.7	28'-0"	18'-9"	16'-6"			
156"	13'-0"	132.7	29'-1"	19'-6"	17'-0"			
162"	13'-6"	143.1	30'-3"	20'-3"	17'-6"			
168"	14'-0"	153.9	31'-4"	21'-0"	18'-0"			
174"	14'-6"	165.1	32'-6"	21'-9"	18'-6"			
180"	15'-0"	176.7	33'-7"	22'-6"	19'-0"			

GENERAL NOTES

1. THIS HEADWALL IS NOT DESIGNED TO OFFER ANY SUPPORT TO THE PIPE. THE FILL IS TO BE PLACED AND ALL SHORING REMOVED BEFORE THE SLOPE PAVING IS PLACED.
2. ALL SLOPE PAVING SHALL CONFORM TO THE CURRENT ALABAMA HIGHWAY DEPARTMENT STANDARD SPECIFICATIONS.
3. QUANTITIES SHOWN INCLUDE TWO SLOPE PAVED WALLS AND TWO TOE WALLS.
4. CONTRACTOR SHALL INSURE THROUGH MECHANICAL MEANS OR OTHER APPROVED DEVICES THAT CONNECTION BETWEEN BEVELED PIPE END AND CONCRETE WILL NOT BE DETACHED.
5. CONCRETE SHALL BE CLASS A WITH A MINIMUM 28 DAY COMPRESSIVE STRENGTH OF 3000 p.s.i.
6. PROVIDE 6"x6"-6/6 GAGE WELDED WIRE FABRIC FOR PIPES LARGER THAN 36" OR EQUIVALENT.
7. RIP-RAP SHALL BE UNIFORM SIZE THROUGHOUT, AND AT LEAST 6" THICK AT THE SMALLEST DIMENSION.

REVISIONS			CITY OF HUNTSVILLE	
DESCRIPTION	NAME	DATE	CONCRETE & LIMESTONE RIP-RAP SLOPE PAVED HEADWALLS-ROUND PIPE DETAIL	
DIRECTOR		DATE	ENGINEER OF PUBLIC WORKS CITY OF HUNTSVILLE, ALABAMA	DR-152B DRAWING NO.

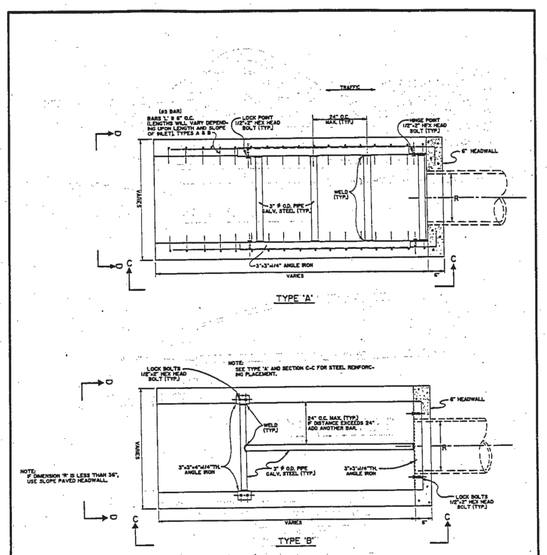

REVISIONS			CITY OF HUNTSVILLE	
DESCRIPTION	NAME	DATE	ROADWAY PIPE SAFETY GRATE DETAIL 36" PIPE OR GREATER	
DIRECTOR		DATE	ENGINEER OF PUBLIC WORKS CITY OF HUNTSVILLE, ALABAMA	DR-158A DRAWING NO.

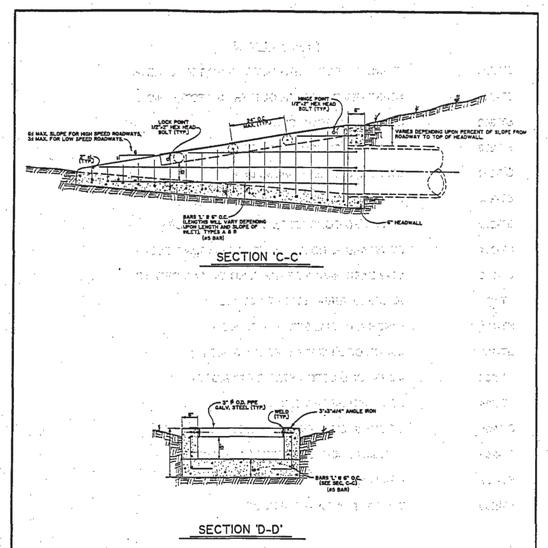

REVISIONS			CITY OF HUNTSVILLE	
DESCRIPTION	NAME	DATE	ROADWAY PIPE SAFETY GRATE DETAIL 36" PIPE OR GREATER	
DIRECTOR		DATE	ENGINEER OF PUBLIC WORKS CITY OF HUNTSVILLE, ALABAMA	DR-158B DRAWING NO.

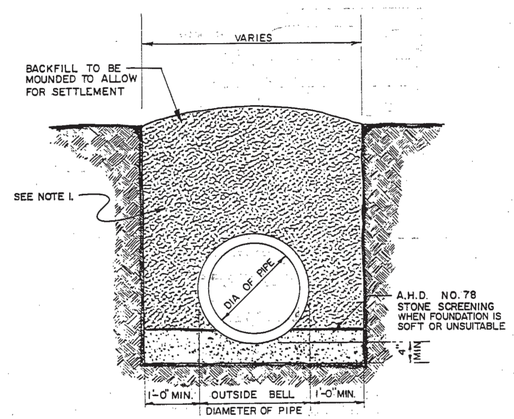

STORM SEWER PIPE BEDDING

NOTE:
1. IN TRAFFIC AREAS USE CRUSHED STONE, DENSE GRADED BASE OR APPROVED CLASS I BACKFILL COMPACTED IN 6" LAYERS TO 95% STANDARD PROCTOR DENSITY UP TO WHERE STREET SUBGRADE REQUIREMENTS DICTATE.

REVISIONS			CITY OF HUNTSVILLE	
DESCRIPTION	NAME	DATE	TYPICAL STORM SEWER PIPE BEDDING DETAIL	
DIRECTOR		DATE	ENGINEER OF PUBLIC WORKS CITY OF HUNTSVILLE, ALABAMA	DR-166 DRAWING NO.

NOTE:
NOT ALL CITY OF HUNTSVILLE DETAILS ARE SHOWN. THE CONTRACTOR SHALL REFER TO THE CITY OF HUNTSVILLE ENGINEERING STANDARDS FOR THE CONSTRUCTION OF PUBLIC IMPROVEMENTS DATED MAY 1991 AND THE CITY OF HUNTSVILLE ENGINEERING DEPARTMENT "DESIGN AND ACCEPTANCE MANUAL FOR SANITARY SEWERS" DATED MARCH 2011 FOR ADDITIONAL INFORMATION.

LBYD
Civil and Structural Engineers
Birmingham, Alabama
Atlanta, Georgia
Huntsville, Alabama
Tampa Bay, Florida
www.lbyd.com

LBYD Project Number
302-10-002A

LBYD, Inc.
305 Church Street SW
Suite 719
Huntsville, AL 35801
Phone (256) 533-1575
Fax (256) 533-1744

© copyright 2011
These drawings and design intent are the sole property of City of Huntsville which may not be reproduced without written permission.

HUNTSVILLE
The Star of Alabama

DETAILS

REDSTONE GATEWAY - PACKAGE 1F
ROADWAY IMPROVEMENTS
CITY OF HUNTSVILLE
HUNTSVILLE, ALABAMA

REV	DATE	DRAWN	CHECKED	DESCRIPTION	TRAFFIC	REAL ESTATE	CITY REVIEW	PE	DRAINAGE
DRAWN: BSJ		CHECKED: RAN		DATE: JANUARY 27, 2012					

C14.3

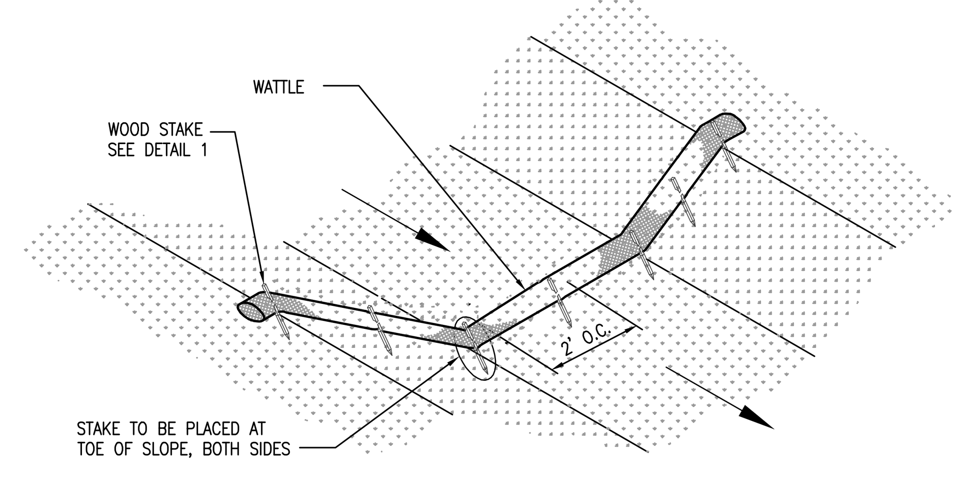

Wattle Spacing

REFER TO ALDOT SPECIAL DRAWING NO. ESC-300
FOR RECOMMENDED PLACEMENT INTERVAL BETWEEN WATTLES

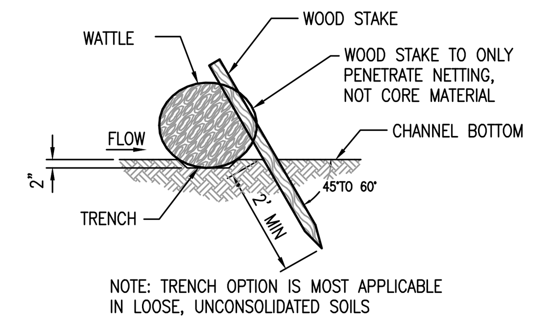

NOTE: TRENCH OPTION IS MOST APPLICABLE
IN LOOSE, UNCONSOLIDATED SOILS

STAKE DETAIL 1
(WITH TRENCH)

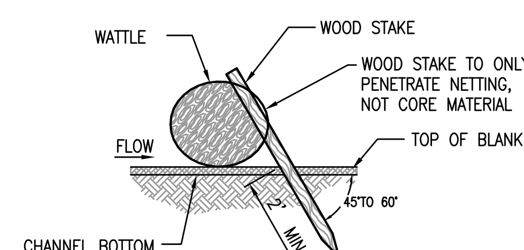

STAKE DETAIL 2
(NO TRENCH)

CdW Wattle Check Dam

N.T.S.

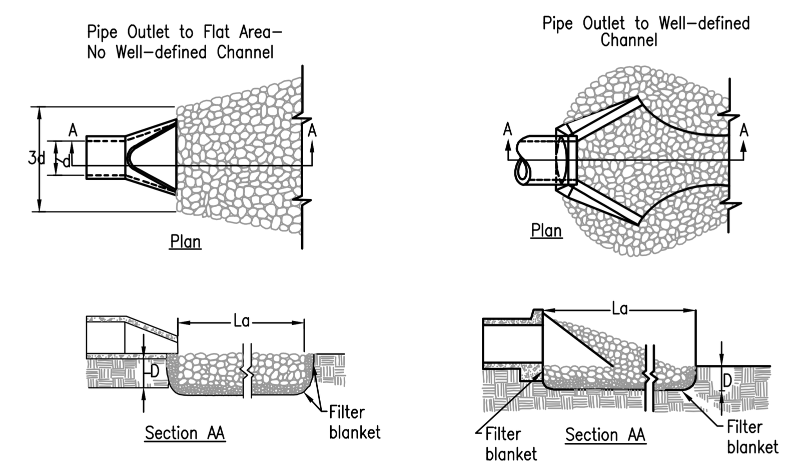

SPECIAL NOTES:
1. RIP RAP DISCHARGE APRON SHALL BE INSTALLED AT A ZERO SLOPE.
2. A FILTER BLANKET OR FILTER FABRIC SHOULD BE INSTALLED BETWEEN THE RIPRAP AND SOIL FOUNDATION.
3. DEPTH OF APRON SHALL BE NO LESS THAN 6".
4. FOR DETERMINING APRON LENGTH, WIDTH, AND MEDIAN STONE SIZE, REFER TO FIGURES OP-2 AND OP-3 FROM THE LATEST ALABAMA EROSION CONTROL HANDBOOK.
5. THE GRADATION OF RIPRAP SHALL BE PER TABLES OP-2 AND OP-3 FROM THE LATEST ALABAMA EROSION CONTROL HANDBOOK.

OP Outlet Protection

N.T.S.

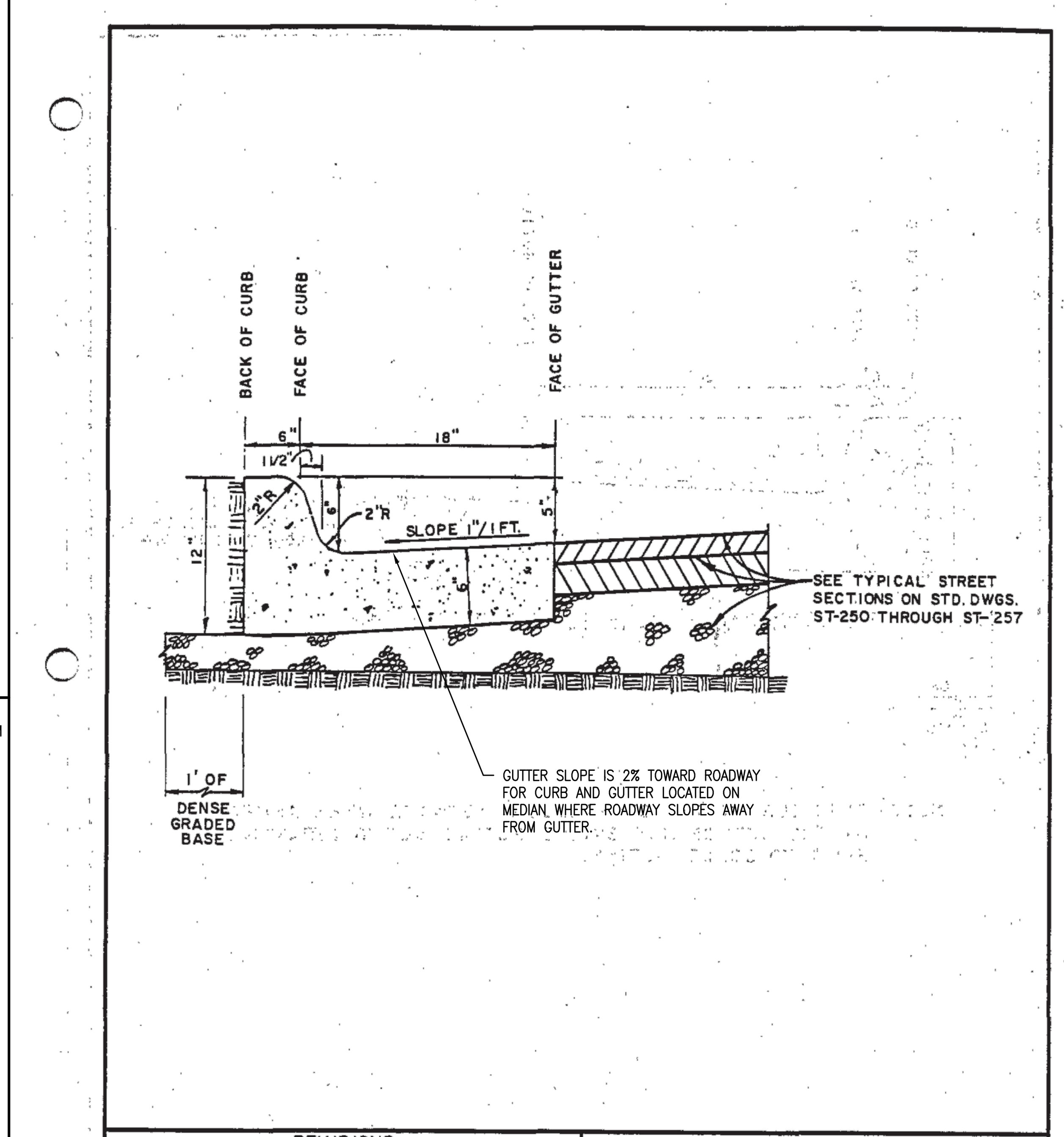

REVISIONS			CITY OF HUNTSVILLE	
DESCRIPTION	NAME	DATE	DETAIL FOR STANDARD CURB WITH GUTTER 24" TOTAL WIDTH	
DIRECTOR		DATE	ENGINEER OF PUBLIC WORKS CITY OF HUNTSVILLE, ALABAMA	ST-200 DRAWING NO.

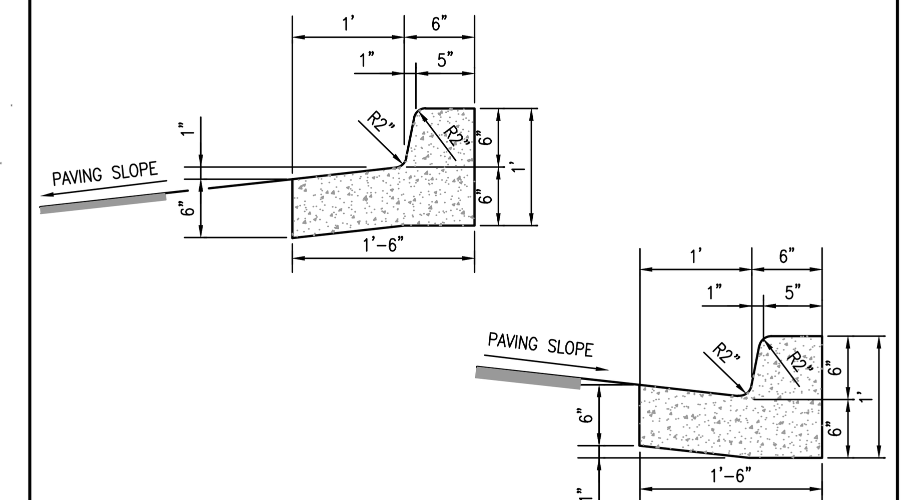

NOTES:
1. SLOPE GUTTER AS SHOWN ACCORDING TO PAVING SLOPE. THIS SLOPE SHALL NOT EXCEED 5% TO COMPLY WITH ADA REQUIREMENTS AT ANY HANDICAP RAMP.
2. 3/4" EXPANSION JOINT REQUIRED AT P.C.'S AND P.T.'S OF ALL CURVES, AT STRUCTURES (CURB INLETS, WHEELCHAIR RAMPS, ETC.) AND EVERY 100' MAX. WITH FILLER MATERIAL.
3. 3/16" SAWED JOINTS REQUIRED ON 20' INTERVALS.
4. 3,000 PSI CONCRETE UNLESS STATED OTHERWISE.

18" Curb & Gutter

N.T.S.

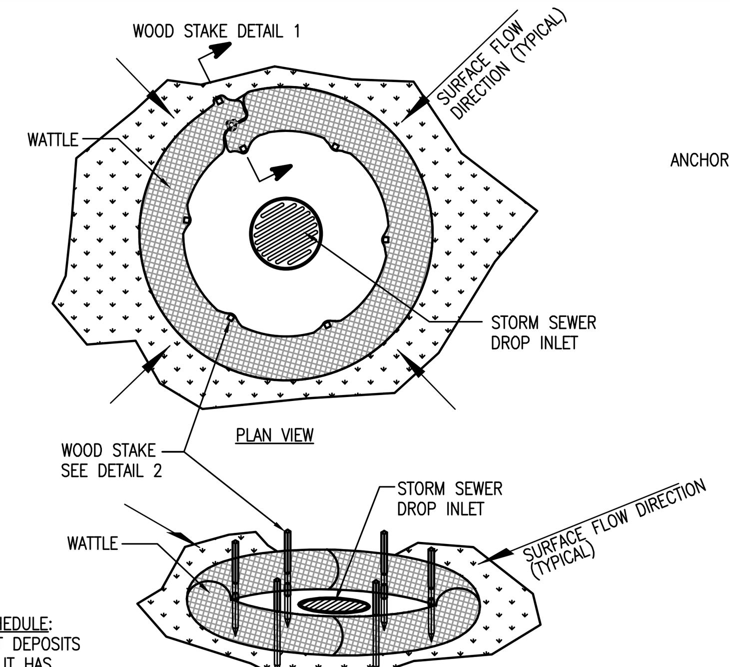

Drop Inlet Protection

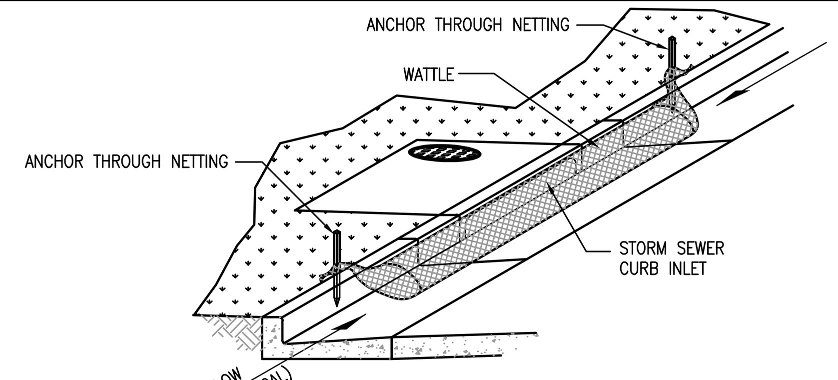

Curb Inlet Protection

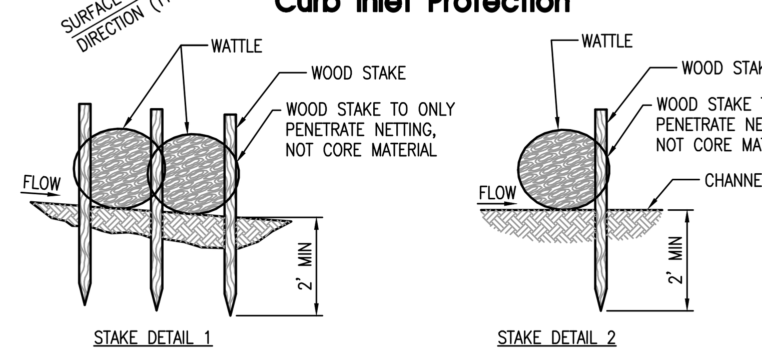

MAINTENANCE SCHEDULE:
REMOVE SEDIMENT DEPOSITS PROMPTLY AFTER IT HAS ACCUMULATED TO 1/2 OF THE ORIGINAL CAPACITY, TAKING CARE NOT TO UNDERMINE THE ENTRENCHED WATTLES. INSPECT PERIODICALLY FOR DETERIORATION OR DAMAGE FROM CONSTRUCTION ACTIVITIES. REPAIR DAMAGED BARRIER IMMEDIATELY.

NOTE:
WATTLES MAY BE A STRAW WATTLE, A MULCH WATTLE, OR APPROVED EQUAL. STONE WATTLES SHALL BE USED FOR CURB INLETS ADJACENT TO PAVING.

WIP Wattle Inlet Protection

N.T.S.

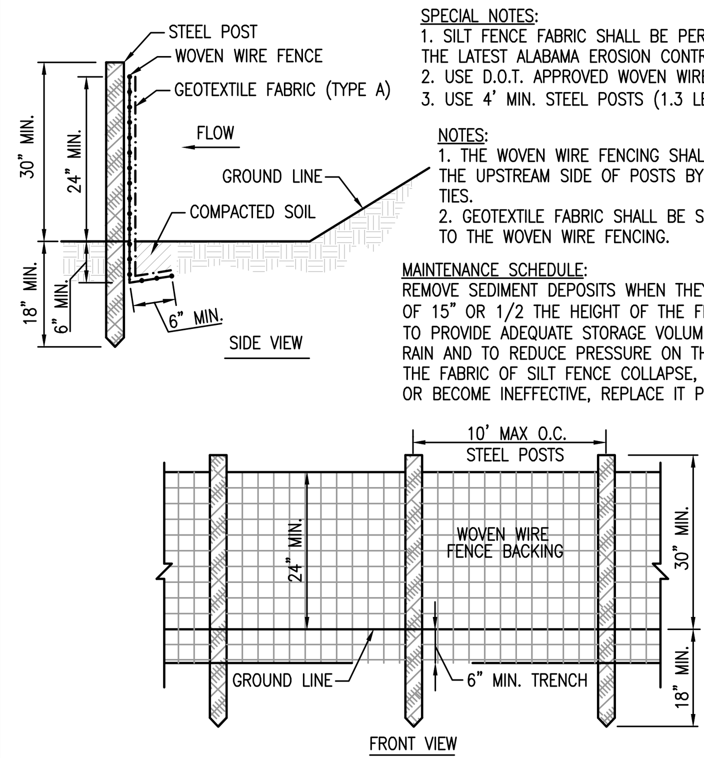

SPECIAL NOTES:
1. SILT FENCE FABRIC SHALL BE PER TABLE SB-1 FROM THE LATEST ALABAMA EROSION CONTROL HANDBOOK.
2. USE D.O.T. APPROVED WOVEN WIRE FENCE.
3. USE 4' MIN. STEEL POSTS (1.3 LB/FT MIN.).

NOTES:
1. THE WOVEN WIRE FENCING SHALL BE FASTENED TO THE UPSTREAM SIDE OF POSTS BY STAPLES OR WIRE TIES.
2. GEOTEXTILE FABRIC SHALL BE SECURELY FASTENED TO THE WOVEN WIRE FENCING.

MAINTENANCE SCHEDULE:
REMOVE SEDIMENT DEPOSITS WHEN THEY REACH A DEPTH OF 15" OR 1/2 THE HEIGHT OF THE FENCE AS INSTALLED TO PROVIDE ADEQUATE STORAGE VOLUME FOR THE NEXT RAIN AND TO REDUCE PRESSURE ON THE FENCE. SHOULD THE FABRIC OF SILT FENCE COLLAPSE, TEAR, DECOMPOSE OR BECOME INEFFECTIVE, REPLACE IT PROMPTLY.

SB Silt Fence – Type A

N.T.S.

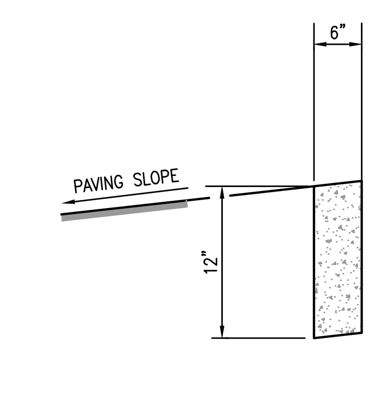

NOTES:
1. SLOPE GUTTER AS SHOWN ACCORDING TO PAVING SLOPE.
2. 3/4" EXPANSION JOINT REQUIRED AT P.C.'S AND P.T.'S OF ALL CURVES, AT STRUCTURES (CURB INLETS, WHEELCHAIR RAMPS, ETC.) AND EVERY 100' MAX. WITH FILLER MATERIAL.
3. 3/16" SAWED JOINTS REQUIRED ON 20' INTERVALS.
4. 3,000 PSI CONCRETE UNLESS STATED OTHERWISE.

6" FLUSH MOUNTED CURB

N.T.S.

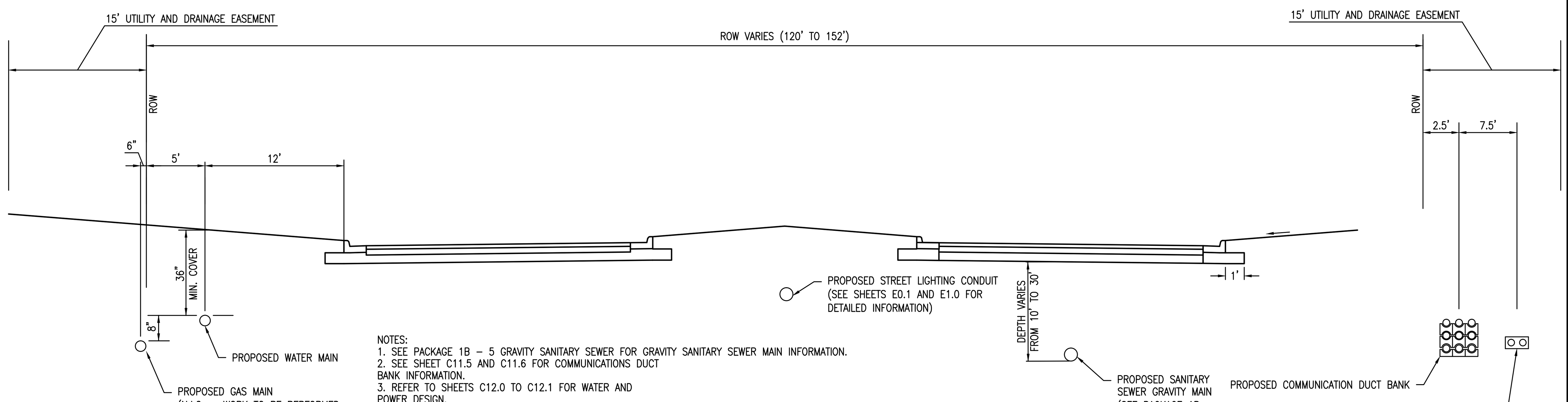

NOTES:
1. SEE PACKAGE 1B – 5 GRAVITY SANITARY SEWER FOR GRAVITY SANITARY SEWER MAIN INFORMATION.
2. SEE SHEET C11.5 AND C11.6 FOR COMMUNICATIONS DUCT BANK INFORMATION.
3. REFER TO SHEETS C12.0 TO C12.1 FOR WATER AND POWER DESIGN.
4. REFER TO SHEETS E0.1 TO E1.0 FOR STREET LIGHTING CONDUITS.
5. REFER TO SHEETS LI-1 TO LI-9 FOR IRRIGATION DESIGN.

Typical Utility Placement Cross Section

N.T.S.

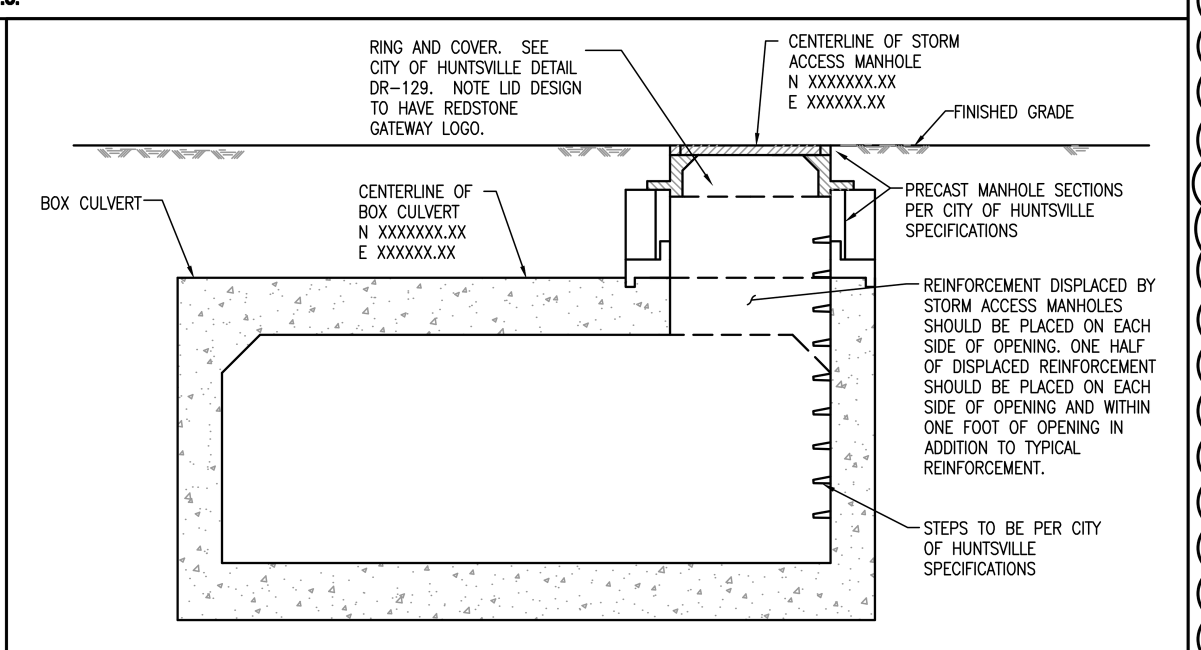

STORM ACCESS MANHOLE

N.T.S.

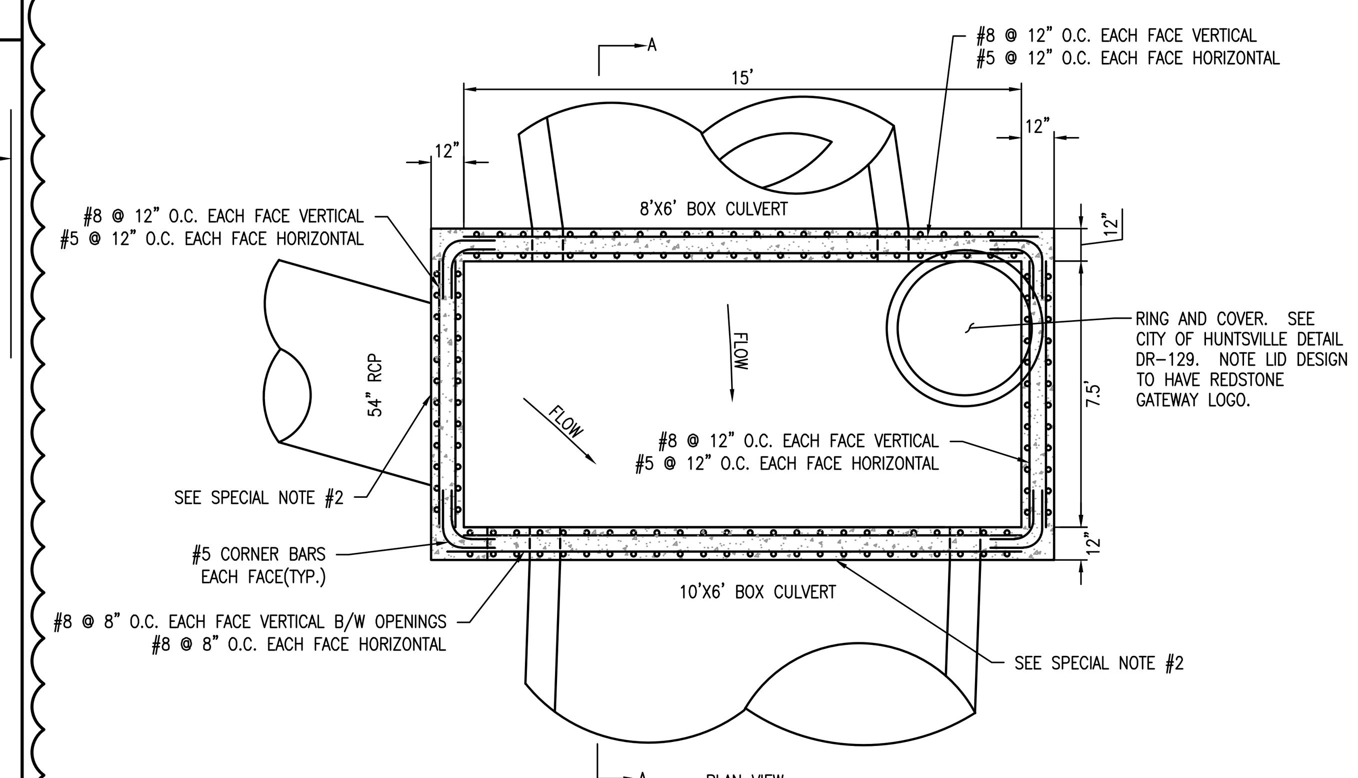

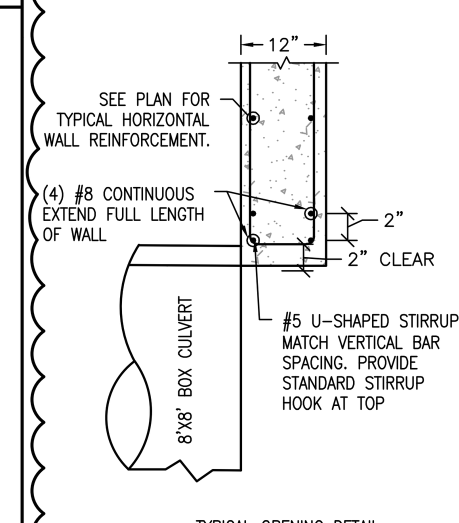

TYPICAL OPENING DETAIL

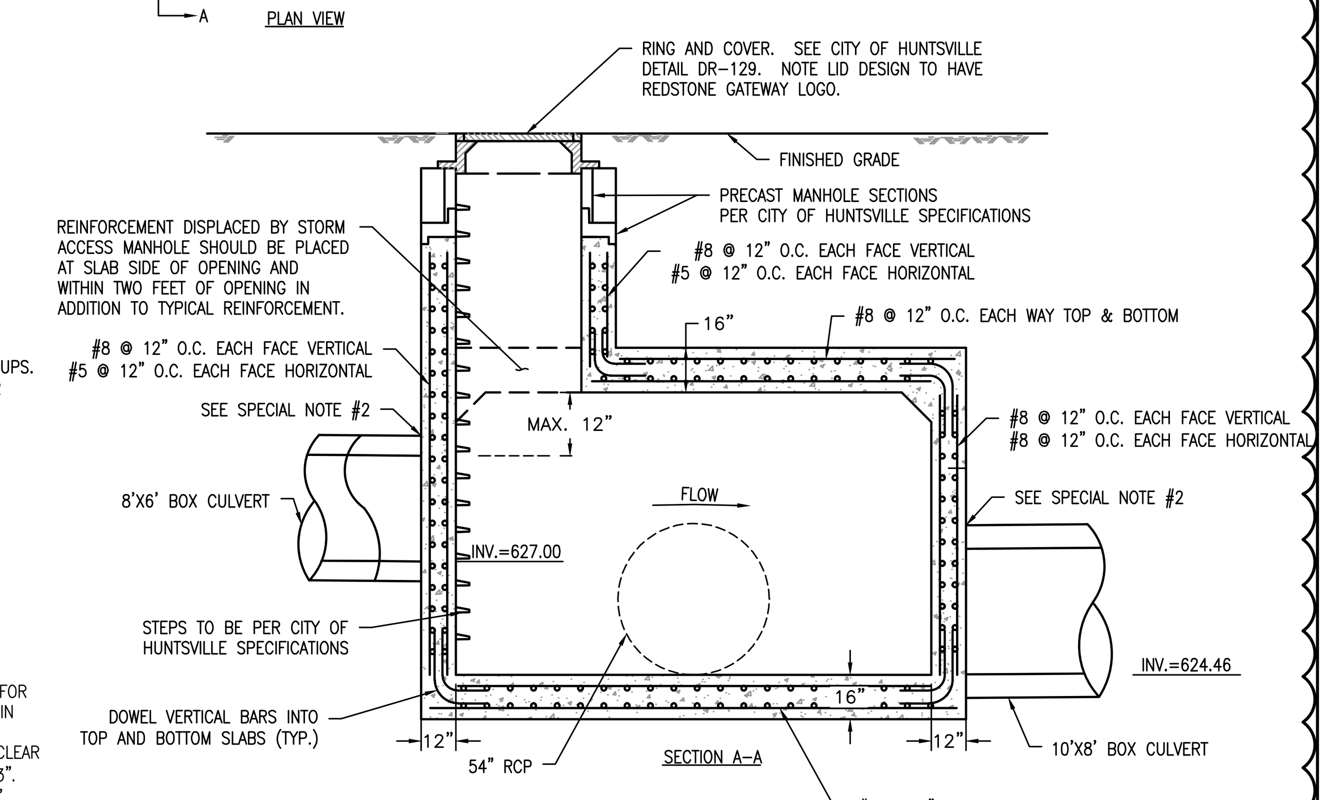

SPECIAL NOTES:
1. CONCRETE TO BE MINIMUM 4000 PSI.
2. TYPICAL OPENING DETAIL TO BE USED FOR REINFORCEMENT ABOVE ALL OPENINGS IN JUNCTION BOX WALLS.
3. FOR CONCRETE CAST AGAINST EARTH, CLEAR COVER TO REINFORCEMENT SHALL BE 3". ALL OTHER CLEAR COVER SHALL BE 2".
4. PLACE VERTICAL REINFORCEMENT 2" CLEAR AT FACE OF WALLS THEN PLACE HORIZONTAL REINFORCEMENT.

JUNCTION BOX DETAIL–STR #1A

N.T.S.

1

TENSION LAP SPLICE LENGTHS

BAR SIZE	fc = 4000 psi TOP BARS A	TOP BARS B	OTHER BARS A	OTHER BARS B
#3	19"	24"	15"	19"
#4	25"	32"	19"	25"
#5	31"	40"	24"	31"
#6	37"	48"	29"	37"
#7	54"	70"	42"	54"
#8	62"	80"	48"	62"
#9	70"	91"	54"	70"
#10	79"	102"	61"	79"
#11	87"	113"	67"	87"

NOTE:
1. TOP BARS ARE HORIZONTAL REINFORCEMENT WITH MORE THAN 12" OF CONCRETE CAST BELOW THE REINFORCEMENT.

LBYD
Civil and Structural Engineers
Birmingham, Alabama
Atlanta, Georgia
Huntsville, Alabama
Tampa Bay, Florida
www.lbyd.com

LBYD Project Number
302-10-002A

LBYD, Inc.
305 Church Street SW
Suite 719
Huntsville, AL 35801
Phone (256) 533-1575
Fax (256) 533-1744

© copyright 2011
These drawings and design intent are the sole property of City of Huntsville which may not be reproduced without written permission.

ALABAMA REGISTERED No. 26754 PROFESSIONAL ENGINEER TIMOTHY A. ROBERTS
1/30/2012

HUNTSVILLE
The Star of Alabama

DETAILS

REDSTONE GATEWAY - PACKAGE 1F
ROADWAY IMPROVEMENTS
CITY OF HUNTSVILLE
HUNTSVILLE, ALABAMA

REV	DATE	DRAWN	CHECKED	DESCRIPTION
1	1/30/12	TBE	TAR	STORM & GRADING RE-DESIGN

TRAFFIC | REAL ESTATE | PE | DRAINAGE — COH REVIEW

DRAWN: BSJ
CHECKED: RAN
DATE: JANUARY 27, 2012

C14.4-R1

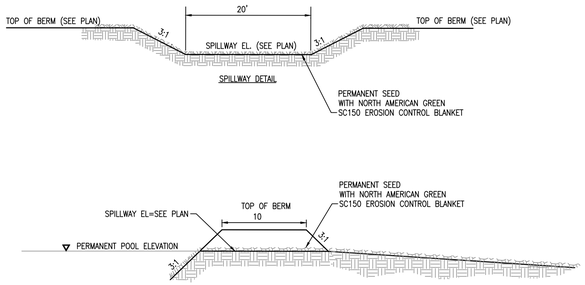

POND G OUTLET SPILLWAY DETAIL

N.T.S.

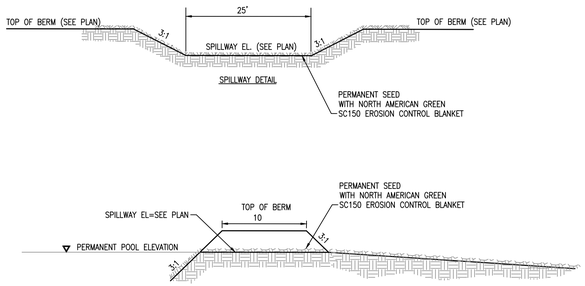

POND I OUTLET SPILLWAY DETAIL

N.T.S.

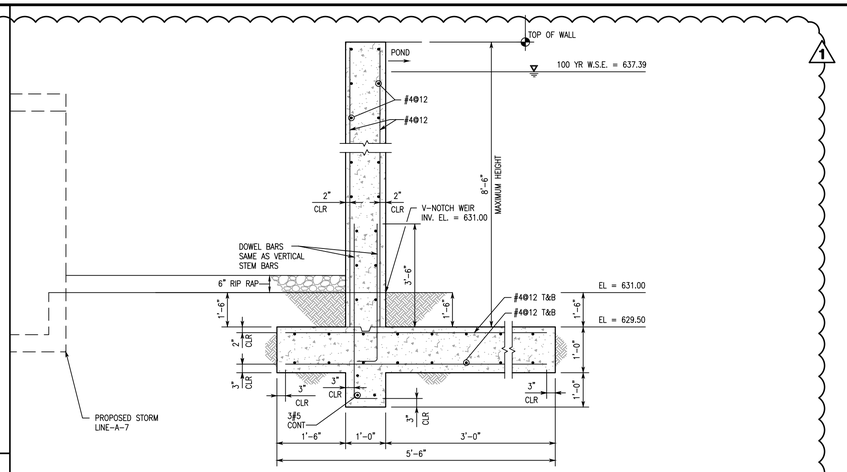

SECTION VIEW

N.T.S.

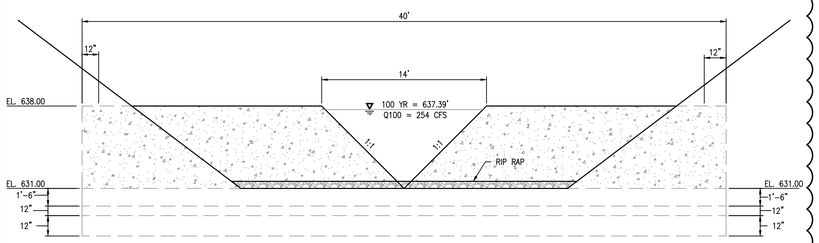

FRONT VIEW

N.T.S.

POND F OUTLET CONTROL STRUCTURE

N.T.S.

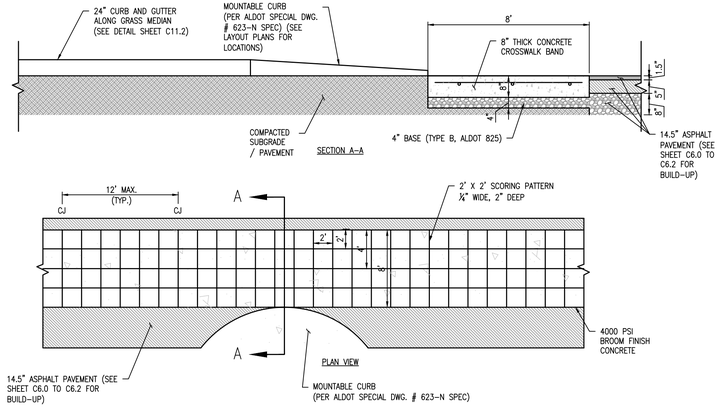

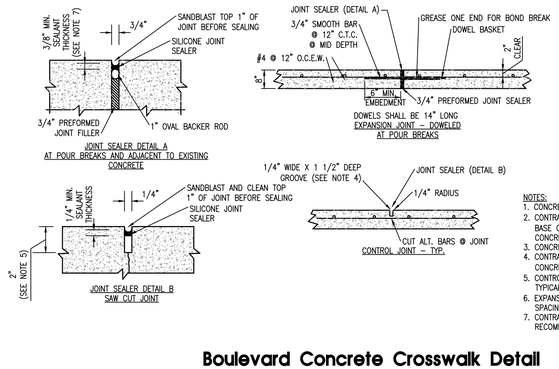

NOTES:

1. CONCRETE SURFACE SHALL BE BROOM FINISH
2. CONTRACTOR SHALL INSTALL 4" OF CRUSHED AGGREGATE BASE COURSE, TYPE B (ALDOT 825) UNDER ALL CONCRETE PAVING
3. CONCRETE SHALL HAVE 4000 PSI AT 28 DAYS
4. CONTRACTOR SHALL INSTALL CONTROL JOINTS IN CONCRETE PAVING AT 12' MAX SPACING BOTH WAYS.
5. CONTROL JOINT TO BE 1/4 OF THE SLAB THICKNESS TYPICALLY.
6. EXPANSION JOINTS AT POUR BREAKS AND 100' MAX SPACING. COORDINATE WITH CONTROL JOINTS.
7. CONTRACTOR TO FOLLOW MANUFACTURERS RECOMMENDATIONS.

Boulevard Concrete Crosswalk Detail

N.T.S.

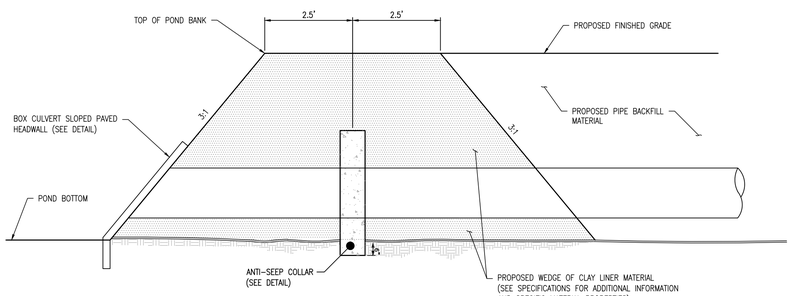

* CONTRACTOR SHALL INSTALL RETENTION POND EARTH PLUG AT ALL STORM PIPE PENETRATIONS INTO PONDS. EARTH PLUG SHALL BE INSTALLED FIRST THEN EXCAVATED FOR PIPE AND COLLAR INSTALLATION. EXCAVATED EARTH PLUG MATERIAL SHALL BE BACKFILLED IN PIPE TRENCH UPON COMPLETION OF PIPE INSTALLATION.

* CONTRACTOR SHALL LOCATE ANTI-SEEP COLLAR AT THE PIPE JOINT CLOSEST TO SHOWN LOCATION. JOINT MUST BE LOCATED WITHIN PLUG WEDGE.

RETENTION POND EARTH PLUG

N.T.S.

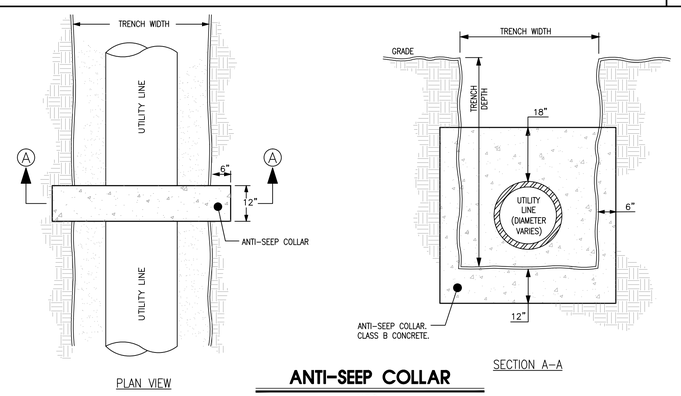

ANTI-SEEP COLLAR

N.T.S.

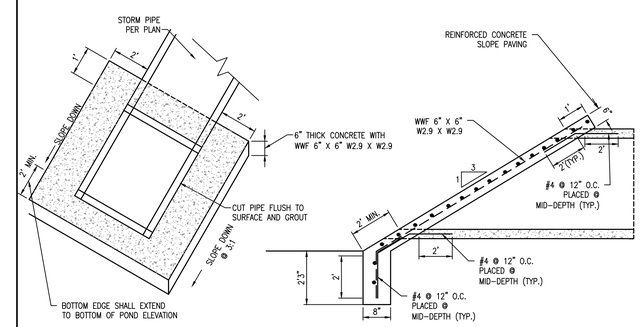

Box Culvert Slope Paved Headwall

N.T.S.

LBYD
Civil and Structural Engineers
Birmingham, Alabama
Atlanta, Georgia
Huntsville, Alabama
Tampa Bay, Florida
www.lbyd.com

LBYD Project Number
302-10-002A

LBYD, Inc.
305 Church Street SW
Suite 719
Huntsville, AL 35801
Phone (256) 533-1575
Fax (256) 533-1744

© copyright 2011
These drawings and design intent are the sole property of City of Huntsville which may not be reproduced without written permission.

ALABAMA REGISTERED No. 26754 PROFESSIONAL ENGINEER
1/30/2012

HUNTSVILLE
The Star of Alabama

DETAILS

REDSTONE GATEWAY - PACKAGE 1F
ROADWAY IMPROVEMENTS
CITY OF HUNTSVILLE
HUNTSVILLE, ALABAMA

REV	DATE	DRAWN	CHECKED	DESCRIPTION	TRAFFIC	REAL ESTATE	PE	DRAINAGE
1	1/30/12	TBE	TAR	STORM & GRADING RE-DESIGN				

DRAWN: BSJ
CHECKED: RAN
DATE: JANUARY 27, 2012

C14.5-R1

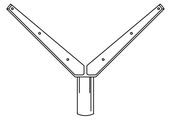

DOUBLE EXPANSION ARM

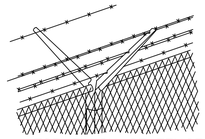

TOP FINISH OF FENCE

FOR SINGLE & DOUBLE EXTENSION ARMS PRESSED STEEL EXTENSION ARMS TOP 12 GA. BARBED WIRE 12"± ABOVE FABRIC & 12"± IN & OUT FROM FENCE.

SINGLE EXTENSION ARM

FOR END & CORNER POST 12 GAGE PRESSED STEEL

BALL TOP

FOR END GATE

NOTE:
1. FE 5 FENCE HAS NO BARBED WIRE OVERHANG.
2. FE 6 FENCE HAS A SINGLE BARBED WIRE OVERHANG WITH ARM POINTED AWAY FROM AREA ENCLOSED.
3. FE 7 FENCE HAS A DOUBLE BARBED WIRE OVERHANG.

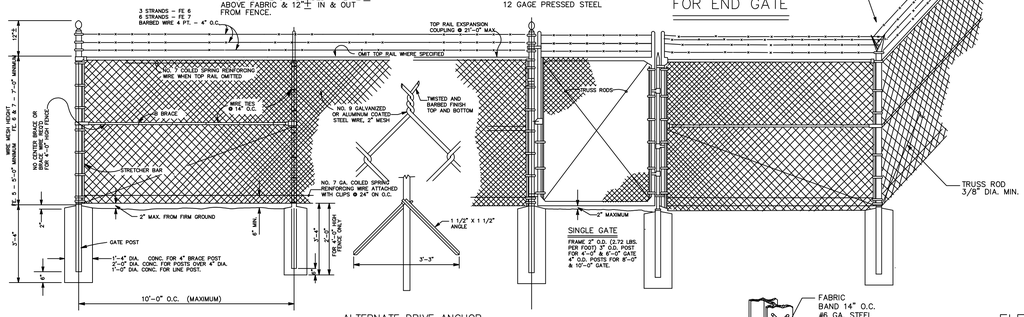

ALTERNATE DRIVE ANCHOR METHOD OF POST SETTING

FENCE AND WALK GATE

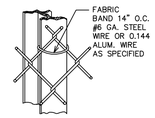

METHOD OF TYING FABRIC TO LINE POST (TYPICAL)

ROUND OR "H" COL.

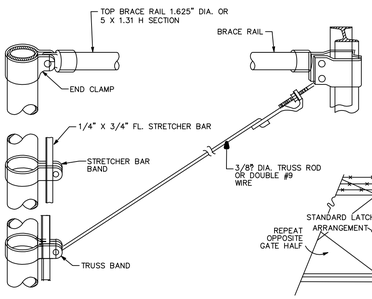

END & GATE POST CONNECTIONS

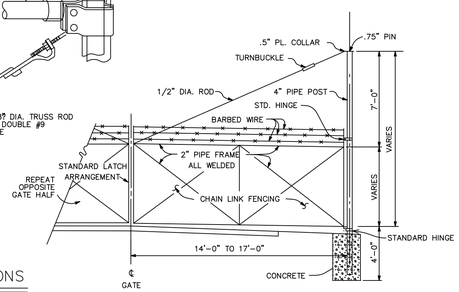

DOUBLE GATE

14' AND 16' LEAVES

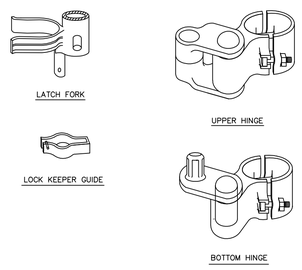

SINGLE GATE DETAILS

FE-5 (NO BARBED WIRE OVERHANG)

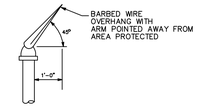

FE-6 BARBED WIRE OVERHANG

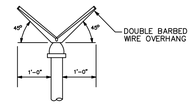

FE-7 BARBED WIRE OVERHANG

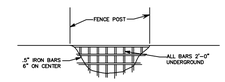

ELEVATION OF CLOSURE UNDER FENCE N.T.S.

TYPE "A"

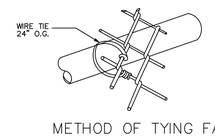

METHOD OF TYING FABRIC TO TOP AND BRACE RAIL (TYPICAL)

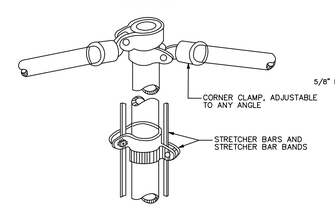

CORNER POST CONNECTIONS

4" O.D. POST 9.1 LBS PER FOOT – GATE
3" O.D. POST 5.79 LBS PER FOOT – GATE & CORNER
1 5/8" O.D. TOP BRACE RAIL 2.27 LBS PERFOOT
2" O.D. GATE FRAME 2.72 LBS PER FOOT
2 3/8" O.D. LINE POST 3.65 LBS PER FOOT

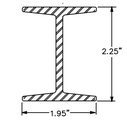

H – COLUMN LINE POST
4.1 LBS PER FOOT

POST, BRACE & GATE FRAME

CORNER & PULL POST SHALL BE 3" O.D. 5.79 LBS. PER UNIT

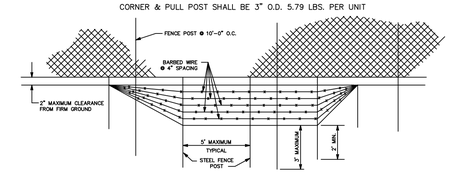

ELEVATION OF CLOSURE UNDER FENCE N.T.S.

TYPE "B"

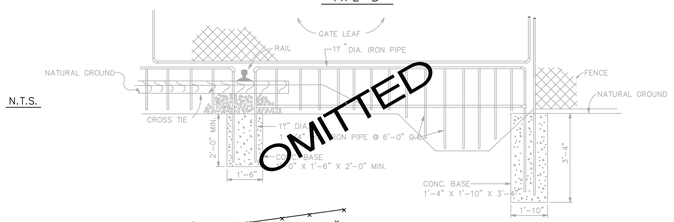

OMITTED

ELEVATION OF CLOSURE UNDER FENCE AT R. R.

NTS

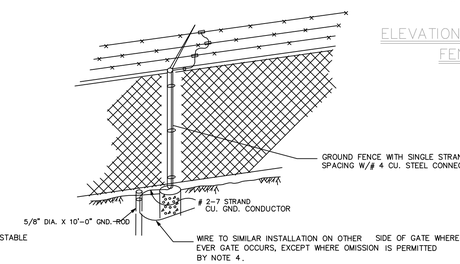

GROUNDING DETAILS

NTS

GROUNDING NOTES:

1. EACH FENCE SHALL HAVE AT LEAST ONE GROUND.
2. ALL FENCE SHALL BE GROUNDED AT LEAST EVERY 1,000 FEET.
3. A GROUND SHALL BE INSTALLED AT EVERY POINT, WHERE POWER LINES OF 2,300 VOLTS OR MORE CROSS FENCE AND AN ADDITIONAL GROUND 150 FT. EACH SIDE OF POWER LINES.
4. GROUND SHALL BE INSTALLED BOTH SIDES OF ANY BREAK IN THE FENCE (GATES, REMOVABLE SECTIONS ETC.)

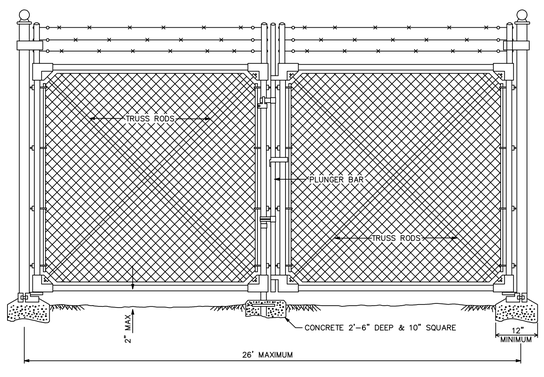

DOUBLE GATE

2'-8" TO 12" LEAVES AS INDICATED FOR ENTRANCE
2" O.D. GATE FRAME
4" O.D. GATE POST

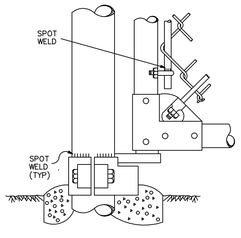

BOTTOM HINGE & CORNER ELL

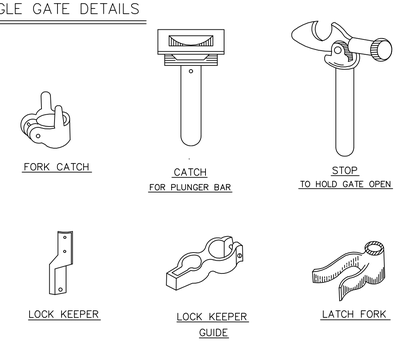

DOUBLE GATE DETAILS

OMITTED

ELEVATION OF FENCE AT PIPE CROSSING

NTS

SPECIAL NOTES:

1. ADDITIVE ALTERNATE TO MAKE FENCING FABRIC, FRAME, FITTINGS, AND ACCESSORIES BLACK VINYL COATED IN LIEU OF BASE BID ZINC COATED (GALVANIZED).

GENERAL NOTES:

1. ALL FENCE FABRIC SHALL BE TIED SECURELY TO TOP RAIL, BRACE RAIL & POSTS ON INSIDE OF SECURED AREA WITH 2 OR MORE COMPLETE TWISTS OF WIRE AS SHOWN.
2. ALL GATE HINGE PINS AND CLAMP BOLTS SHALL BE SECURELY SPOT WELDED.
3. FABRIC SHALL BE HELD TAUT AGAINST POSTS, RAILS, BRACES, ETC. BY TIES.

REV	BY	REQUEST NUMBER	DATE	SAFETY	URBAN SERVICE	FIRE MARSHAL	CHECKER	PROJ ENG	CHIEF ENG

U.S. ARMY GARRISON – REDSTONE
DIRECTORATE OF PUBLIC WORKS
REDSTONE ARSENAL, ALABAMA

DRAWN: DEH
DESIGNED: DEH
CHECKED: DEH
PROJ. ENG.: J. RILEY
FIRE ENGINEER:
SAFETY DIRECTOR:
CUSTOMER:
REQUEST NUMBER: N/A

SECURITY FENCE
FE-5, FE-6, FE-7
FENCE DETAILS

SCALE: AS NOTED
DRAWING NUMBER: STD-115
CHIEF ENGINEER: Joey B. Skinner, P.E.
DATE: DEC. 20 1985
SHEET NUMBER: 1

TRAFFIC SPECIALIST	SECURITY	ENVIRONMENTAL	ENERGY	INFORMATION MANAGEMENT	MASTER PLANNING	ARCHITECTURAL	CIVIL	ELECTRICAL	MECHANICAL	STRUCTURAL	FIRE DEPARTMENT

LBYD
Civil and Structural Engineers
Birmingham, Alabama
Atlanta, Georgia
Huntsville, Alabama
Tampa Bay, Florida
www.lbyd.com

LBYD Project Number
302-10-002A

LBYD, Inc.
305 Church Street SW
Suite 719
Huntsville, AL 35801
Phone (256) 533-1575
Fax (256) 533-1744

© copyright 2011
These drawings and design intent are the sole property of City of Huntsville which may not be reproduced without written permission.

HUNTSVILLE
The Star of Alabama

DETAILS - SECURITY FENCE

REDSTONE GATEWAY - PACKAGE 1F
ROADWAY IMPROVEMENTS
CITY OF HUNTSVILLE
HUNTSVILLE, ALABAMA

REV	DATE	DRAWN	CHECKED	DESCRIPTION	DATE	TRAFFIC	R/A EDATS	CONT. REVIEW	PE	DRAINAGE
DRAWN:	ESJ	CHECKED:	RAN		JANUARY 27, 2012					

C14.6

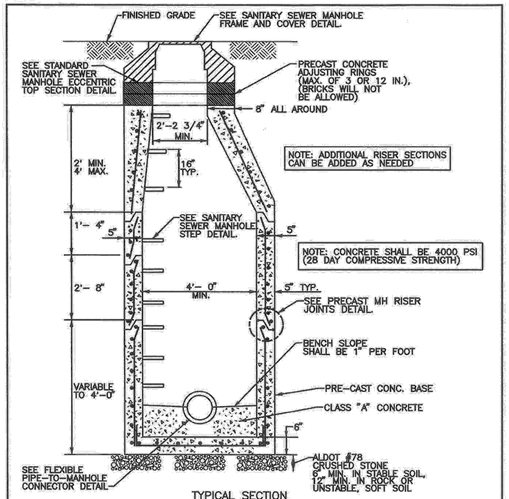

TYPICAL SECTION

STANDARD SANITARY SEWER MANHOLE DETAIL

NOT TO SCALE

(BASE SECTION FOR 8" – 24" PIPE SHOWN; LARGER PIPES NOVEMBER REQUIRE LARGER MANHOLE. CONSULT MANHOLE MANUFACTURER FOR DETAILS).

CITY OF HUNTSVILLE	
STANDARD SANITARY SEWER MANHOLE DETAIL	
CITY ENGINEERING DIVISION CITY OF HUNTSVILLE, ALABAMA	SD–1

REVISED NOVEMBER 2005

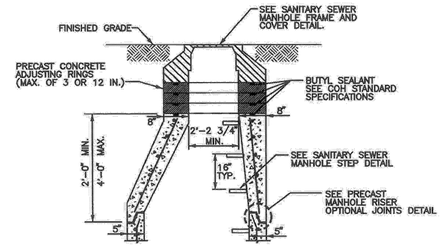

STANDARD SANITARY SEWER MANHOLE ECCENTRIC TOP SECTION DETAIL

NOT TO SCALE

NOTE: BUTYL SEALANT SHALL BE USED BETWEEN EACH ADJUSTING RING AS DESCRIBED IN COH SPECIFICATIONS

CITY OF HUNTSVILLE	
STANDARD SANITARY SEWER MANHOLE ECCENTRIC TOP SECTION DETAIL	
CITY ENGINEERING DIVISION CITY OF HUNTSVILLE, ALABAMA	SD–2

REVISED NOVEMBER 2005

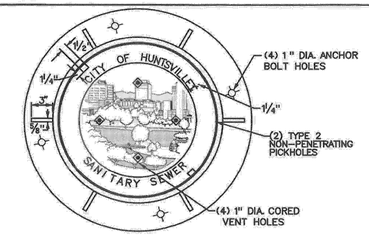

COVER AND FRAME PLAN

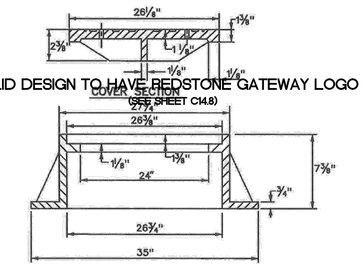

LID DESIGN TO HAVE REDSTONE GATEWAY LOGO (SEE SHEET C14.8)

FRAME SECTION

NOTE: VULCAN FOUNDRY INC. V-1355 FRAME AND COVER OR APPROVED EQUAL.

SANITARY SEWER MANHOLE FRAME AND COVER DETAIL

NOT TO SCALE

NOTE: BUTYL SEALANT SHALL BE USED TO SEAL FRAME TO MH AS DESCRIBED IN COH SPECIFICATIONS.

CITY OF HUNTSVILLE	
SANITARY SEWER MANHOLE FRAME AND COVER DETAIL	
CITY ENGINEERING DIVISION CITY OF HUNTSVILLE, ALABAMA	SD–3

REVISED NOVEMBER 2005

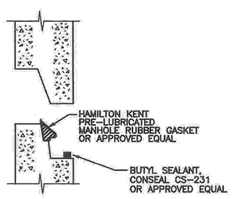

DOUBLE SEAL METHOD
HAMILTON KENT RUBBER GASKET
AND CONSEAL CS-231-BUTYL SEALANT

NOTE:
ALL JOINTS SHALL BE OF SUCH DESIGN AS WILL PERMIT EFFECTIVE JOINING WITH NO LEAKAGE AND NO INFILTRATION AND TO PERMIT PLACEMENT WITHOUT APPRECIABLE IRREGULARITIES ON THE INTERIOR WALL.

PRECAST MANHOLE RISER JOINT

NOT TO SCALE

CITY OF HUNTSVILLE	
PRECAST MANHOLE RISER JOINT	
CITY ENGINEERING DIVISION CITY OF HUNTSVILLE, ALABAMA	SD–5

REVISED NOVEMBER 2005

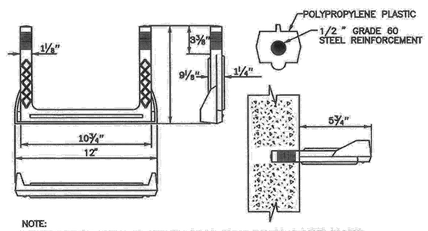

NOTE:
MANHOLE STEPS SHALL BE MANUFACTURED FROM POLYPROPYLENE PLASTIC REINFORCED WITH A 1/2" GRADE 60 STEEL ROD. STEPS SHALL BE EMBEDDED IN THE RISER, BASE AND TOP SECTIONS A MINIMUM OF 3" AT THE TIME OF CONSTRUCTION. MANHOLE STEPS SHALL BE A MINIMUM OF 10 3/4" WIDE AND EXTEND FROM THE MANHOLE WALL A MINIMUM OF 5 3/4".

STANDARD SANITARY SEWER MANHOLE STEP DETAIL

NOT TO SCALE

CITY OF HUNTSVILLE	
STANDARD SANITARY SEWER MANHOLE STEP DETAIL	
CITY ENGINEERING DIVISION CITY OF HUNTSVILLE, ALABAMA	SD–6

REVISED NOVEMBER 2005

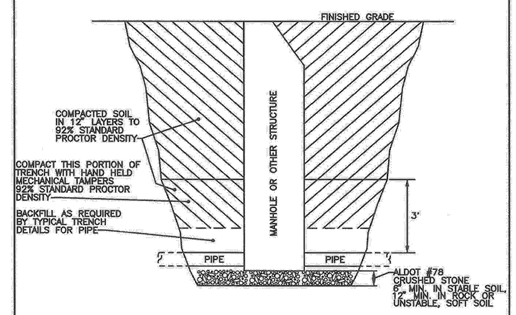

BEDDING AND BACKFILL REQUIREMENTS AROUND MANHOLES AND OTHER DRAINAGE & SANITARY SEWER STRUCTURES IN NON–TRAFFIC AREAS

NOT TO SCALE

CITY OF HUNTSVILLE	
BEDDING AND BACKFILL REQUIREMENTS AROUND MANHOLES IN NON–TRAFFIC AREAS	
CITY ENGINEERING DIVISION CITY OF HUNTSVILLE, ALABAMA	SD–9

REVISED NOVEMBER 2005

LBYD
Civil and Structural Engineers
Birmingham, Alabama
Atlanta, Georgia
Huntsville, Alabama
Tampa Bay, Florida
www.lbyd.com

LBYD Project Number
302-10-002A

LBYD, Inc.
305 Church Street SW
Suite 719
Huntsville, AL 35801
Phone (256) 533-1575
Fax (256) 533-1744

© copyright 2011
These drawings and design intent are the sole property of City of Huntsville which may not be reproduced without written permission.

HUNTSVILLE
The Star of Alabama

DETAILS

REDSTONE GATEWAY - PACKAGE 1F
ROADWAY IMPROVEMENTS
CITY OF HUNTSVILLE
HUNTSVILLE, ALABAMA

REV	DATE	DRAWN	CHECKED	DESCRIPTION	TRAFFIC	REAL ESTATE	CON. REVIEW	PE	DRAINAGE
DRAWN: BSJ			CHECKED: RAN	DATE: JANUARY 27, 2012					

C14.7

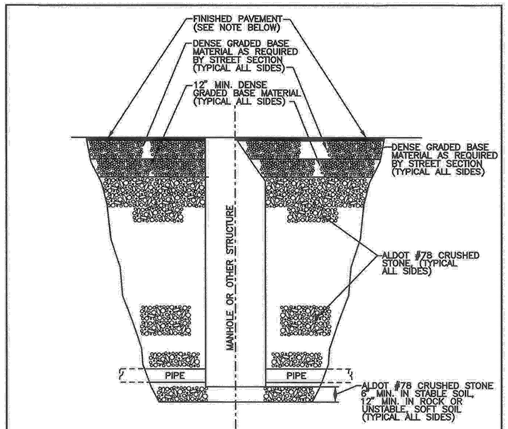

(OPTION NO. 1)
BEDDING AND BACKFILL REQUIREMENTS AROUND MANHOLES AND OTHER DRAINAGE & SANITARY SEWER STRUCTURES WITHIN TRAFFIC AREAS

NOT TO SCALE

NOTE:
1. TRAFFIC AREAS SHALL EXTEND TO 5 FT BEYOND BACK OF CURB OR EDGE OF PAVEMENT, UNLESS OTHERWISE NOTED ON PLAN VIEW.
2. ASPHALT PAVING FOR STREETS SHALL MEET CURRENT CITY REQUIREMENTS.

CITY OF HUNTSVILLE	
OPTION NO. 1 BEDDING AND BACKFILL REQUIREMENTS AROUND MANHOLES IN TRAFFIC AREAS	
CITY ENGINEERING DIVISION CITY OF HUNTSVILLE, ALABAMA	SD–10A

REVISED NOVEMBER 2005

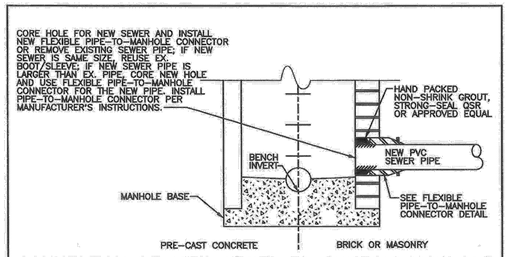

CONNECTION OF NEW SEWER TO EXISTING MANHOLE

NOT TO SCALE

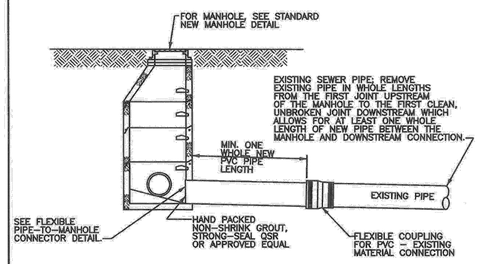

CONNECTION OF NEW MANHOLE TO EXISTING SEWER

NOT TO SCALE

CITY OF HUNTSVILLE	
NEW MANHOLE CONNECTION DETAIL	
CITY ENGINEERING DIVISION CITY OF HUNTSVILLE, ALABAMA	SD–11

REVISED NOVEMBER 2005

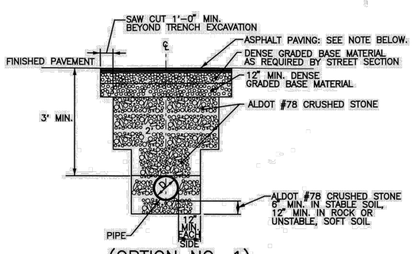

(OPTION NO. 1)
TYPICAL TRENCH DETAIL FOR SANITARY SEWER PIPE IN TRAFFIC AREAS

NOT TO SCALE

NOTES:
1. ALL EXCAVATION WORK SHALL BE IN COMPLIANCE WITH APPLICABLE REQUIREMENTS OF GOVERNING AUTHORITIES HAVING JURISDICTION.
2. TRAFFIC AREAS TO EXTEND 5 FT BEYOND BACK OF CURB OR EDGE OF PAVEMENT, UNLESS OTHERWISE NOTED ON PLAN VIEW.
3. ASPHALT PAVING FOR STREETS SHALL MEET CURRENT CITY REQUIREMENTS.
4. STEEL ENCASEMENT SHALL BE USED UNDER ROADWAYS WHERE SPECIFIED.

BACKFILL LIMITS TABLE

MAXIMUM ALLOWABLE TRENCH WIDTH "W"	INSIDE DIAMETER OF PIPE "D"
2'–6"	4"
2'–8"	6"
2'–10"	8"
3'–0"	10"
3'–5"	12"
3'–9"	15"
4'–1"	18"
4'–4"	21"
4'–8"	24"
5'–1"	27"
5'–5"	30"
5'–10"	33"
6'–2"	36"
6'–8"	39"
6'–11"	42"
7'–6"	48"
D+2t+2'–8"	OVER 48"

IF "W" IS EXCEEDED, THE CONTRACTOR SHALL BE RESPONSIBLE FOR ADDITIONAL COST OF CRUSHED STONE, UNLESS OTHERWISE APPROVED BY CITY ENGINEERING.

CITY OF HUNTSVILLE	
OPTION NO. 1 TYPICAL TRENCH DETAILS FOR PIPE IN TRAFFIC AREAS	
CITY ENGINEERING DIVISION CITY OF HUNTSVILLE, ALABAMA	SD–15A

REVISED NOVEMBER 2005

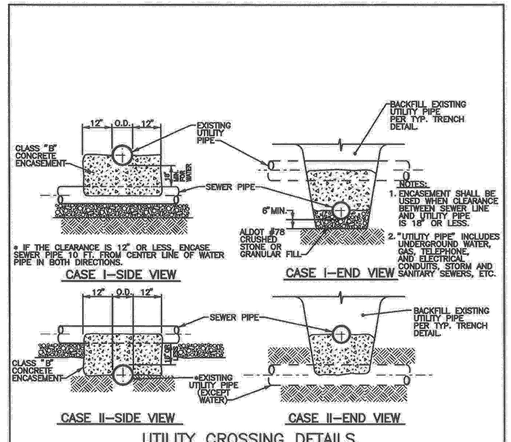

UTILITY CROSSING DETAILS

NOT TO SCALE

NOTES:
1. RELOCATION OF A UTILITY OTHER THAN CITY OF HUNTSVILLE SEWERS WILL BE THE RESPONSIBILITY OF THAT UTILITY, HOWEVER, CONTRACTOR SHALL COORDINATE WITH OTHER UTILITIES.
* 2. SANITARY SEWER SHALL ALWAYS BE LOCATED BENEATH WATER LINES. WRITTEN APPROVAL SHALL BE REQUIRED FROM BOTH CITY ENGINEERING AND HUNTSVILLE UTILITIES FOR A SANITARY SEWER LINE TO CROSS ABOVE A WATER LINE.

CITY OF HUNTSVILLE	
UTILITY CROSSING DETAILS	
CITY ENGINEERING DIVISION CITY OF HUNTSVILLE, ALABAMA	SD–16

REVISED NOVEMBER 2005

V-1355 ASSEMBLY

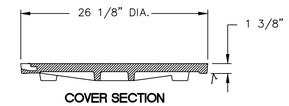

COVER SECTION

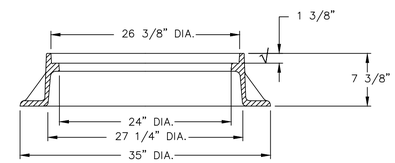

FRAME SECTION

* OR APPROVED EQUAL

PRODUCT NUMBER

41355047A01

DESIGN FEATURES

MATERIALS
COVER-GRAY IRON
ASTM A48 CL35B
FRAME-GRAY IRON
ASTM A48 CL35B

DESIGN LOAD
HEAVY DUTY

COATING
UNDIPPED

OPEN AREA
N/A

√ DESIGNATES MACHINE SURFACE

REFERENCE INFORMATION

41355047
41355010

DRAWING DETAILS

ORIGINAL DRAWING:	SMM	01/06/11
REVISED BY:	SMM	02/01/11

Corporate Headquarters
301 Spring Street
PO Box 439
East Jordan, MI
49727-0439
800.874.4100

EJ GROUP ®

Call Today for More Information
800.626.4653 EJIW EAST JORDAN IRON WORKS EST 1883 WE COVER YOUR INFRASTRUCTURE®
www.ejiw.com MADE IN THE USA

•Weights (lbs./kg.) dimensions (inches/mm., and drawings provided for your guidance.
•We reserve the right to modify specifications without prior notice.

CONFIDENTIAL: This drawing is the property of East Jordan Iron works, Inc., and embodies confidential information, registered marks, trade secret information, and/or know how that is the property of East Jordan Iron Works, Inc. ©Copyright 2009 East Jordan Iron Works, Inc.
•Uncontrolled distribution.

EXISTING CONFIGURATION

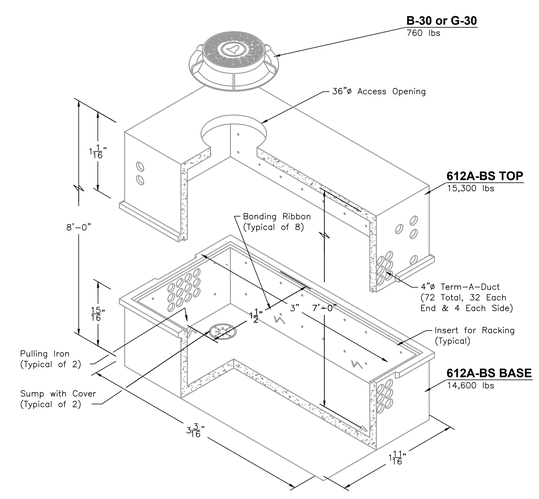

TOP ROTATED CONFIGURATION

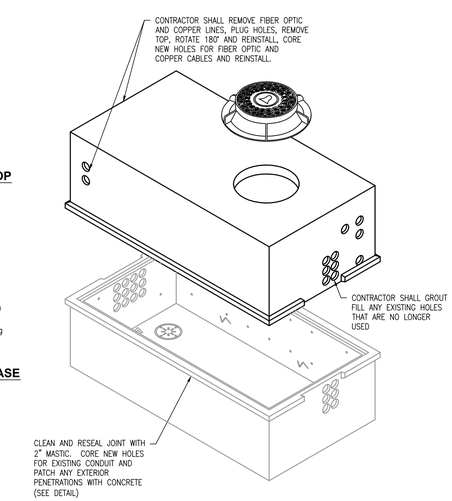

NOTE:
BACKGROUND INFORMATION PROVIDED BY OLDCASTLE PRECAST, INC.

Communication Vault Modifications

N.T.S.

LBYD
Civil and Structural Engineers
Birmingham, Alabama
Atlanta, Georgia
Huntsville, Alabama
Tampa Bay, Florida
www.lbyd.com

LBYD Project Number
302-10-002A

LBYD, Inc.
305 Church Street SW
Suite 719
Huntsville, AL 35801
Phone (256) 533–1575
Fax (256) 533–1744

© copyright 2011
These drawings and design intent are the sole property of City of Huntsville which may not be reproduced without written permission.

HUNTSVILLE
The Star of Alabama

DETAILS

REDSTONE GATEWAY - PACKAGE 1F
ROADWAY IMPROVEMENTS
CITY OF HUNTSVILLE
HUNTSVILLE, ALABAMA

REV	DATE	DRAWN	CHECKED	DESCRIPTION	DATE: JANUARY 27, 2012	TRAFFIC	REAL ESTATE	CON. REVIEW	PE	DRAINAGE
DRAWN:	BSJ	CHECKED:	RAN							

C14.8

STANDARD DWG. NO. CS-54

REFERENCE PROJECT NUMBER	FISCAL YEAR	SHEET NUMBER
	2003	

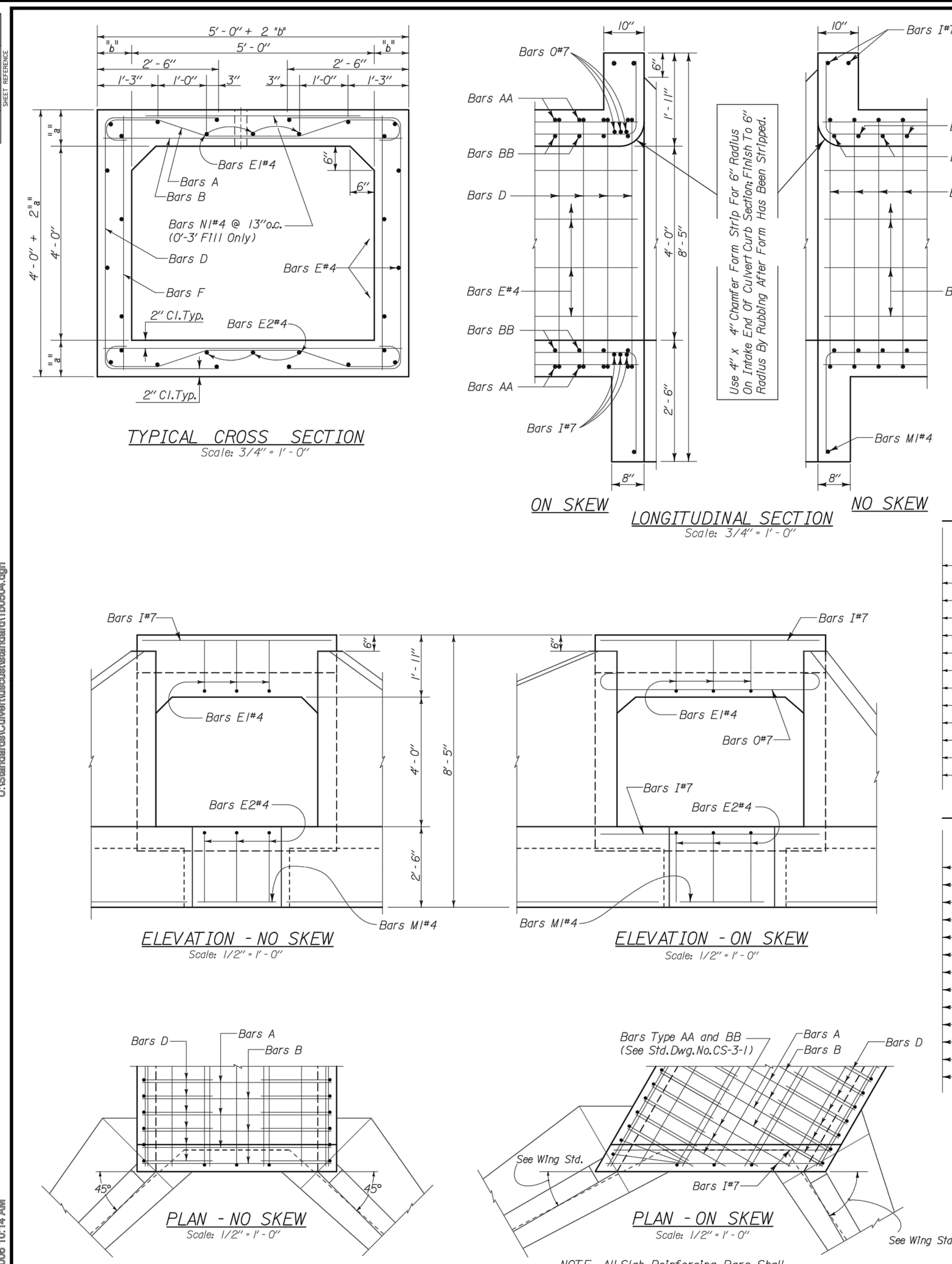

NOTE: All Slab Reinforcing Bars Shall Be Cut To Fit Skew And Hooked.

Bars A

Fill			Bars				Total Length
0'-3'	1'-1"	1'-0"	Bars A#5	1'-8"	1'-0"	1'-1"	7'-2"
3'-6'	1'-1"	1'-0"	Bars A#5	1'-8"	1'-0"	1'-1"	7'-2"
6'-12'	1'-1"	1'-0"	Bars A#4	1'-8"	1'-0"	1'-1"	7'-0"
12'-18'	1'-1"	1'-0"	Bars A#4	1'-8"	1'-0"	1'-1"	7'-0"
18'-24'	1'-1"	1'-0"	Bars A#5	1'-8"	1'-0"	1'-1"	7'-2"
24'-30'	1'-1"	1'-0"	Bars A#5	1'-11"	1'-0"	1'-1"	7'-5"
30'-36'	1'-1"	1'-0"	Bars A#5	2'-1"	1'-0"	1'-1"	7'-7"
36'-42'	1'-1"	1'-0"	Bars A#5	2'-1"	1'-0"	1'-1"	7'-7"
42'-48'	1'-1"	1'-0"	Bars A#5	2'-1"	1'-0"	1'-1"	7'-7½"
48'-54'	1'-1"	1'-0"	Bars A#6	2'-1"	1'-0"	1'-1"	7'-10"
54'-60'	1'-1"	1'-0"	Bars A#6	2'-1"	1'-0"	1'-1"	7'-10½"
60'-66'	1'-1"	1'-0"	Bars A#7	2'-2"	1'-0"	1'-1"	8'-4½"
66'-72'	1'-1"	1'-0"	Bars A#8	2'-3"	1'-0"	1'-1"	8'-8"

Fill	Vertical (o.o.)
0'-3'	0'-5"
3'-6'	0'-5"
6'-12'	0'-5"
12'-18'	0'-5"
18'-24'	0'-5"
24'-30'	0'-5"
30'-36'	0'-5"
36'-42'	0'-5"
42'-48'	0'-5½"
48'-54'	0'-6"
54'-60'	0'-6½"
60'-66'	0'-7½"
66'-72'	0'-8" o.o.

Fill	Diagonal
66'-72'	1'-2½"
60'-66'	1'-2¼"
54'-60'	1'-1¾"
48'-54'	1'-1½"
42'-48'	1'-1¼"
36'-42'	1'-1"
30'-36'	1'-1"
24'-30'	1'-1"
18'-24'	1'-1"
12'-18'	1'-1"
6'-12'	1'-1"
3'-6'	1'-1"
0'-3'	1'-1"

0° SKEW

Fill		
0'-12'	Bars I#7 - 4 Req'd.	5'-10"
0'-12'	Bars M1#4 - 2 Req'd.	2'-10"

30° SKEW

Fill			Total Length
0'-12'	Bars I#7 - 10 Req'd.	6'-9"	
0'-12'	Bars M1#4 - 2 Req'd.	3'-5"	
0'-12'	Bars O#7 - 6 Req'd.	6'-9" o.o.	8'-5"

45° SKEW

Fill			Total Length
0'-12'	Bars I#7 - 10 Req'd.	8'-3"	
0'-12'	Bars M1#4 - 2 Req'd.	4'-4½"	
0'-12'	Bars O#7 - 6 Req'd.	8'-3" o.o.	9'-11"

60° SKEW

Fill			Total Length
0'-12'	Bars I#7 - 10 Req'd.	11'-8"	
0'-12'	Bars M1#4 - 2 Req'd.	6'-10"	
0'-12'	Bars O#7 - 6 Req'd.	11'-8" o.o.	13'-4"

Fill	Bars	Length
0'-3'	Bars B#5	5'-10"
3'-6'	Bars B#5	5'-10"
6'-12'	Bars B#4	5'-10"
12'-18'	Bars B#4	5'-10"
18'-24'	Bars B#5	5'-10"
24'-30'	Bars B#5	6'-1"
30'-36'	Bars B#5	6'-3"
36'-42'	Bars B#5	6'-3"
42'-48'	Bars B#5	6'-3"
48'-54'	Bars B#6	6'-3"
54'-60'	Bars B#6	6'-3"
60'-66'	Bars B#7	6'-4"
66'-72'	Bars B#8	6'-5"

Fill	Bars	Length
0'-3'	Bars N1#4	4'-2"

Fill	Bars	Length
0'-3'	Bars F#4	5'-2"
3'-6'	Bars F#4	5'-2"
6'-12'	Bars F#4	5'-2"
12'-18'	Bars F#4	5'-2"
18'-24'	Bars F#4	5'-2"
24'-30'	Bars F#4	5'-2"
30'-36'	Bars F#4	5'-2"
36'-42'	Bars F#4	5'-2"
42'-48'	Bars F#4	5'-3"
48'-54'	Bars F#4	5'-4"
54'-60'	Bars F#4	5'-5"
60'-66'	Bars F#4	5'-7"
66'-72'	Bars F#4	5'-8"

Fill 0'-72': 2'-4" o.o.

Fill	Bars		Total Length
0'-3'	Bars D#4	5'-2" o.o.	9'-10"
3'-6'	Bars D#4	5'-2" o.o.	9'-10"
6'-12'	Bars D#4	5'-2" o.o.	9'-10"
12'-18'	Bars D#4	5'-2" o.o.	9'-10"
18'-24'	Bars D#5	5'-2" o.o.	9'-10"
24'-30'	Bars D#5	5'-2" o.o.	9'-10"
30'-36'	Bars D#5	5'-2" o.o.	9'-10"
36'-42'	Bars D#5	5'-2" o.o.	9'-10"
42'-48'	Bars D#5	5'-3" o.o.	9'-11"
48'-54'	Bars D#6	5'-4" o.o.	10'-0"
54'-60'	Bars D#6	5'-5" o.o.	10'-1"
60'-66'	Bars D#7	5'-7" o.o.	10'-3"
66'-72'	Bars D#7	5'-8" o.o.	10'-4"

Fill	"a"	"b"	Bars A & B	Bars D	Bars F
0'-3'	9"	7"	# 5 @ 13" o.c.	# 4 @ 6½" o.c.	# 4 @ 12" o.c.
3'-6'	9"	7"	# 5 @ 13" o.c.	# 4 @ 6½" o.c.	# 4 @ 12" o.c.
6'-12'	9"	7"	# 4 @ 16" o.c.	# 4 @ 8" o.c.	# 4 @ 12" o.c.
12'-18'	9"	7"	# 4 @ 11" o.c.	# 4 @ 5½" o.c.	# 4 @ 12" o.c.
18'-24'	9"	7"	# 5 @ 13" o.c.	# 5 @ 6½" o.c.	# 4 @ 12" o.c.
24'-30'	9"	8½"	# 5 @ 11" o.c.	# 5 @ 5½" o.c.	# 4 @ 6" o.c.
30'-36'	9"	9½"	# 5 @ 10" o.c.	# 5 @ 5" o.c.	# 4 @ 6" o.c.
36'-42'	9"	9½"	# 5 @ 8" o.c.	# 5 @ 4" o.c.	# 4 @ 6" o.c.
42'-48'	9½"	9½"	# 5 @ 8" o.c.	# 5 @ 4" o.c.	# 4 @ 6" o.c.
48'-54'	10"	9½"	# 6 @ 10" o.c.	# 6 @ 5" o.c.	# 4 @ 6" o.c.
54'-60'	10½"	9½"	# 6 @ 10" o.c.	# 6 @ 5" o.c.	# 4 @ 6" o.c.
60'-66'	11½"	10"	# 7 @ 13" o.c.	# 7 @ 6½" o.c.	# 4 @ 6" o.c.
66'-72'	12"	10½"	# 8 @ 16" o.c.	# 7 @ 8" o.c.	# 4 @ 6" o.c.

ESTIMATED QUANTITIES

FILL	PER.LIN.FT.BB'L.		CURBS & TOEWALLS 0° SKEW		30° SKEW		45° SKEW		60° SKEW	
	C.Y.CONC.	LB.REINF.	C.Y.CONC.	LB.REINF.	C.Y.CONC.	LB.REINF.	C.Y.CONC.	LB.REINF.	C.Y.CONC.	LB.REINF.
0'-3'	0.52	79	0.80	67	0.93	261	1.15	312	1.67	427
3'-6'	0.52	77	0.80	67	0.93	261	1.15	312	1.67	427
6'-12'	0.52	60	0.80	67	0.93	261	1.15	312	1.67	427
12'-18'	0.52	75								
18'-24'	0.52	90								
24'-30'	0.58	110								
30'-36'	0.61	118								
36'-42'	0.61	139								
42'-48'	0.63	140								
48'-54'	0.65	158								
54'-60'	0.67	159								
60'-66'	0.73	168								
66'-72'	0.77	159								

THESE DRAWINGS REPRESENT DESIGNS PREPARED FOR USE BY THE ALABAMA DEPARTMENT OF TRANSPORTATION; AND ARE NOT TO BE COPIED, REPRODUCED, ALTERED, OR USED BY ANYONE, OR ANY ORGANIZATION, WITHOUT THE EXPRESSED WRITTEN CONSENT OF THE ALABAMA DEPARTMENT OF TRANSPORTATION REPRESENTATIVE AUTHORIZED TO APPROVE SUCH USE. ANYONE MAKING UNAUTHORIZED USE OF THESE DRAWINGS MAY BE PROSECUTED TO THE FULLEST EXTENT OF THE LAW.

DESIGN SECTION SUPERVISOR
ASSISTANT BRIDGE ENGINEER
BRIDGE ENGINEER

ALABAMA DEPARTMENT OF TRANSPORTATION

THIS STANDARD TO BE USED WTH ANY OF THE FOLLOWING STANDARDS
CS-3-1 & Wing Std. For Required Wing.

REVISIONS
1. Revised Border 02/24/03 - VTW

STANDARD
REINFORCED CONCRETE BOX CULVERT
OPENING SINGLE 5'x4'
FILL 0' - 72' ANY SKEW

ESTIMATED QUANTITIES COMPUTED BY: T.J.D. VERIFIED BY: A.D.
CHECKED BY: A.D. DRAWN BY: R. Todd DESIGNED BY: R. Todd
DATE CHECKED: DATE DRAWN: 08/2/89 SCALE: As Shown

STANDARD DWG. NO. CS-54

Plotted: 14-Sep-2006 10:14 AM
U:\Standards\Culvert\uscust\standard\1b0504.dgn

STANDARD DWG. NO. CS-65

REFERENCE PROJECT NUMBER	FISCAL YEAR	SHEET NUMBER
	2003	

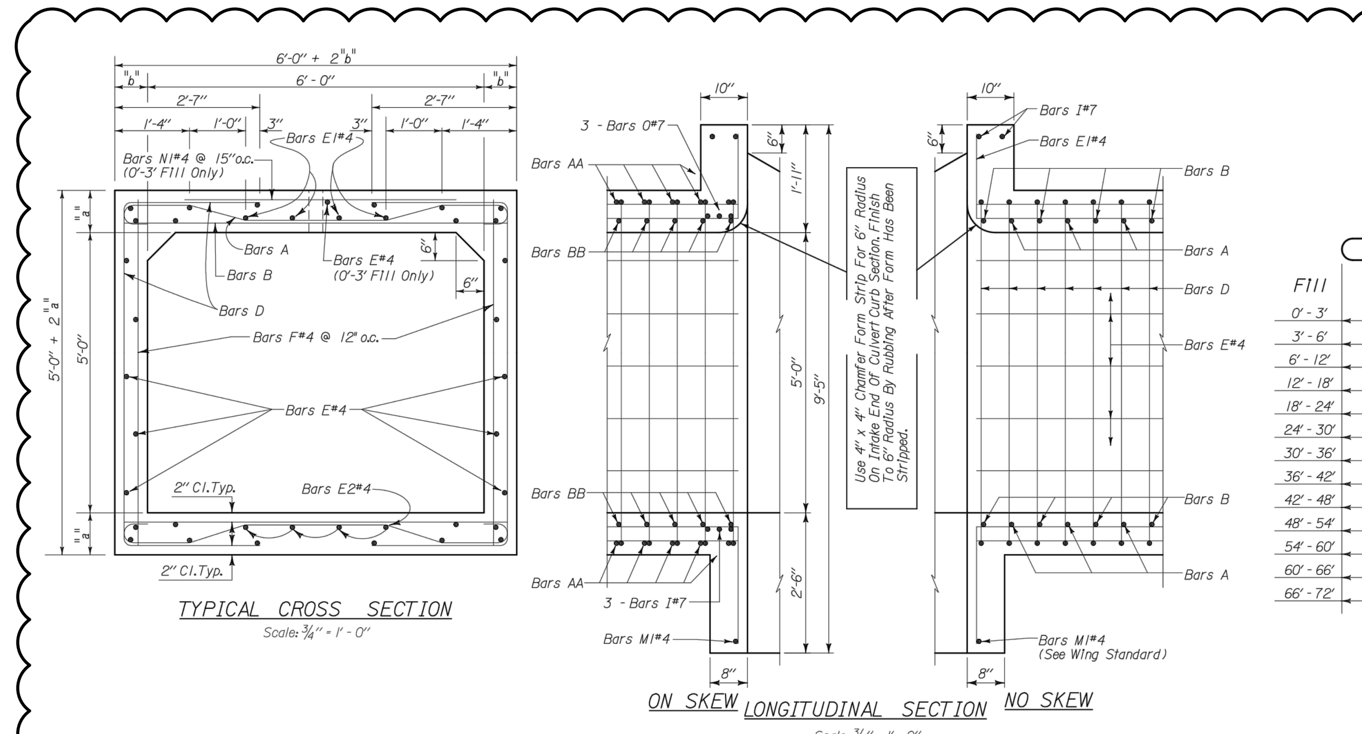

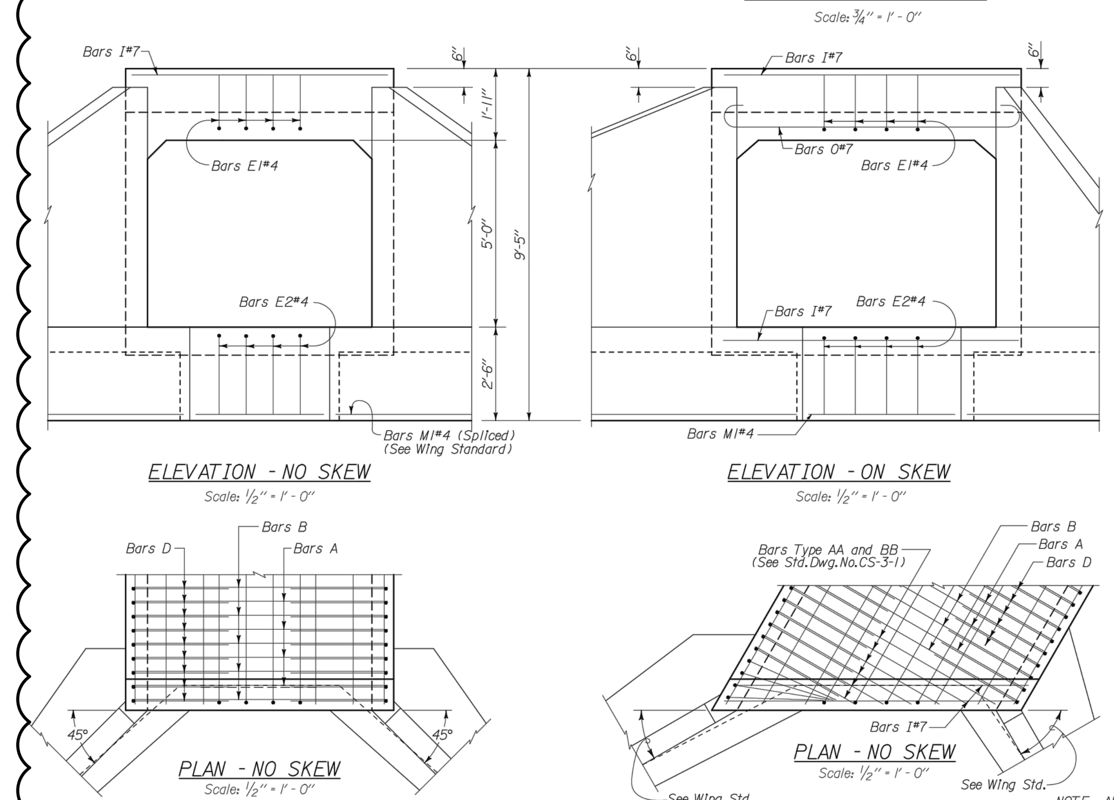

NOTE: All Slab Reinforcing Bars Shall Be Cut To Fit Skew And Hooked.

1

Fill			Bars				Total Length
0'-3'	1'-2"	1'-0"	Bars A#5	2'-6"	1'-0"	1'-2"	8'-2"
3'-6'	1'-2"	1'-0"	Bars A#4	2'-6"	1'-0"	1'-2"	7'-11½"
6'-12'	1'-2"	1'-0"	Bars A#4	2'-6"	1'-0"	1'-2"	7'-11½"
12'-18'	1'-2"	1'-0"	Bars A#5	2'-6"	1'-0"	1'-2"	8'-2"
18'-24'	1'-2"	1'-0"	Bars A#5	2'-7"	1'-0"	1'-2"	8'-3"
24'-30'	1'-2"	1'-0"	Bars A#6	2'-8"	1'-0"	1'-2"	8'-7"
30'-36'	1'-2"	1'-0"	Bars A#6	2'-9"	1'-0"	1'-2"	8'-8½"
36'-42'	1'-2"	1'-0"	Bars A#6	2'-10"	1'-0"	1'-2"	8'-10½"
42'-48'	1'-2"	1'-0"	Bars A#6	2'-10"	1'-0"	1'-2"	8'-11½"
48'-54'	1'-2"	1'-0"	Bars A#7	2'-10"	1'-0"	1'-2"	9'-4"
54'-60'	1'-2"	1'-0"	Bars A#8	2'-11"	1'-0"	1'-2"	9'-7½"
60'-66'	1'-2"	1'-0"	Bars A#8	2'-11"	1'-0"	1'-2"	9'-8"
66'-72'	1'-2"	1'-0"	Bars A#8	3'-0"	1'-0"	1'-2"	9'-10"

Fill	Vertical (o.o.)
0'-3'	5"
3'-6'	4"
6'-12'	4"
12'-18'	5"
18'-24'	5"
24'-30'	6"
30'-36'	6½"
36'-42'	7½"
42'-48'	8½"
48'-54'	9"
54'-60'	9½"
60'-66'	10"
66'-72'	10½" o.o.

Fill	Diagonal
66'-72'	1'-4"
60'-66'	1'-3½"
54'-60'	1'-3¼"
48'-54'	1'-3"
42'-48'	1'-2¾"
36'-42'	1'-2¼"
30'-36'	1'-1¾"
24'-30'	1'-1½"
18'-24'	1'-1"
12'-18'	1'-1"
6'-12'	1'-0¾"
3'-6'	1'-0¾"
0'-3'	1'-1" o.o.

0° SKEW

Bars I#7 - 4 Req'd	6'-10"
Bars M1#4 - 2 Req'd	3'-7"

30° SKEW

		Total Length
Bars I#7 - 10 Req'd	7'-10½"	
Bars M1#4 - 2 Req'd	4'-3"	
Bars O#7 - 6 Req'd.	7'-10½" o.o.	9'-6½"

45° SKEW

		Total Length
Bars I#7 - 10 Req'd	9'-8"	
Bars M1#4 - 2 Req'd	5'-6"	
Bars O#7 - 6 Req'd.	9'-8" o.o.	11'-4"

60° SKEW

		Total Length
Bars I#7 - 10 Req'd	13'-8"	
Bars M1#4 - 2 Req'd	8'-6"	
Bars O#7 - 6 Req'd.	13'-8" o.o.	15'-4"

Fill 0'-72': 2'-5" o.o.

Fill	Bars		Total Length
0'-3'	Bars D#4	6'-2" o.o.	11'-0"
3'-6'	Bars D#4	6'-0" o.o.	10'-10"
6'-12'	Bars D#4	6'-0" o.o.	10'-10"
12'-18'	Bars D#4	6'-2" o.o.	11'-0"
18'-24'	Bars D#4	6'-2" o.o.	11'-0"
24'-30'	Bars D#5	6'-4" o.o.	11'-2"
30'-36'	Bars D#5	6'-5" o.o.	11'-3"
36'-42'	Bars D#5	6'-7" o.o.	11'-5"
42'-48'	Bars D#5	6'-9" o.o.	11'-7"
48'-54'	Bars D#6	6'-10" o.o.	11'-8"
54'-60'	Bars D#7	6'-11" o.o.	11'-9"
60'-66'	Bars D#7	7'-0" o.o.	11'-10"
66'-72'	Bars D#7	7'-1" o.o.	11'-11"

Fill	Bars	Length
0'-3'	Bars B#5	6'-10"
3'-12'	Bars B#4	6'-10"
12'-18'	Bars B#5	6'-10"
18'-24'	Bars B#5	6'-11"
24'-30'	Bars B#6	7'-0"
30'-36'	Bars B#6	7'-1"
36'-42'	Bars B#6	7'-2"
42'-48'	Bars B#6	7'-2"
48'-54'	Bars B#7	7'-2"
54'-66'	Bars B#8	7'-3"
66'-72'	Bars B#8	7'-4"

Fill	Bars	Length
0'-3'	Bars N1#4	5'-0"

Fill	Bars	Length
0'-3'	Bars F#4	6'-2"
3'-6'	Bars F#4	6'-0"
6'-12'	Bars F#4	6'-0"
12'-18'	Bars F#4	6'-2"
18'-24'	Bars F#4	6'-2"
24'-30'	Bars F#4	6'-4"
30'-36'	Bars F#4	6'-5"
36'-42'	Bars F#4	6'-7"
42'-48'	Bars F#4	6'-9"
48'-54'	Bars F#4	6'-10"
54'-60'	Bars F#4	6'-11"
60'-66'	Bars F#4	7'-0"
66'-72'	Bars F#4	7'-1"

Fill	"a"	"b"	Bars A & B	Bars D
0'-3'	9"	7"	# 5 @ 10" o.c.	# 4 @ 5" o.c.
3'-6'	8"	7"	# 4 @ 13" o.c.	# 4 @ 6½" o.c.
6'-12'	8"	7"	# 4 @ 9" o.c.	# 4 @ 4½" o.c.
12'-18'	9"	7"	# 5 @ 10" o.c.	# 4 @ 5" o.c.
18'-24'	9"	7½"	# 5 @ 8" o.c.	# 4 @ 4" o.c.
24'-30'	10"	8"	# 6 @ 10" o.c.	# 5 @ 5" o.c.
30'-36'	10½"	8½"	# 6 @ 9" o.c.	# 5 @ 4½" o.c.
36'-42'	11½"	9"	# 6 @ 9" o.c.	# 5 @ 4½" o.c.
42'-48'	12½"	9"	# 6 @ 8" o.c.	# 5 @ 4" o.c.
48'-54'	13"	9"	# 7 @ 10" o.c.	# 6 @ 5" o.c.
54'-60'	13½"	9½"	# 8 @ 12" o.c.	# 7 @ 6" o.c.
60'-66'	14"	9½"	# 8 @ 12" o.c.	# 7 @ 6" o.c.
66'-72'	14½"	10"	# 8 @ 11" o.c.	# 7 @ 5½" o.c.

ESTIMATED QUANTITIES

FILL	PER.LIN.FT.BB'L.		CURBS & TOEWALLS 0° SKEW		30° SKEW		45° SKEW		60° SKEW	
	C.Y.CONC.	LB.REINF.	C.Y.CONC.	LB.REINF.	C.Y.CONC.	LB.REINF.	C.Y.CONC.	LB.REINF.	C.Y.CONC.	LB.REINF.
0'-3'	0.63	109	0.95	81	1.10	304	1.35	364	2.00	499
3'-6'	0.58	79	1.00	81	1.17	304	1.43	364	2.11	499
6'-12'	0.58	99	1.00	81	1.17	304	1.43	364	2.11	499
12'-18'	0.63	106								
18'-24'	0.65	125								
24'-30'	0.71	146								
30'-36'	0.76	160								
36'-42'	0.82	164								
42'-48'	0.86	182								
48'-54'	0.89	201								
54'-60'	0.94	221								
60'-66'	0.96	222								
66'-72'	1.01	242								

THESE DRAWINGS REPRESENT DESIGNS PREPARED FOR USE BY THE ALABAMA DEPARTMENT OF TRANSPORTATION; AND ARE NOT TO BE COPIED, REPRODUCED, ALTERED, OR USED BY ANYONE, OR ANY ORGANIZATION, WITHOUT THE EXPRESSED WRITTEN CONSENT OF THE ALABAMA DEPARTMENT OF TRANSPORTATION REPRESENTATIVE AUTHORIZED TO APPROVE SUCH USE. ANYONE MAKING UNAUTHORIZED USE OF THESE DRAWINGS MAY BE PROSECUTED TO THE FULLEST EXTENT OF THE LAW.

DESIGN SECTION SUPERVISOR
ASSISTANT BRIDGE ENGINEER
BRIDGE ENGINEER

ALABAMA DEPARTMENT OF TRANSPORTATION

THIS STANDARD TO BE USED WTH ANY OF THE FOLLOWING STANDARDS
CS-3-1 & Wing Std. For Required Wing.

REVISIONS
1. -Reinf. 08/26/80 - G.J.
2. -Reinf. 11/03/80 - F.W.
3. Fill Height Reduced 08/11/00 - M.G.M.
4. Digitized 03/04/03 - VTW

STANDARD
REINFORCED CONCRETE BOX CULVERT
OPENING SINGLE 6' x 5'
FILL 0' - 72' ANY SKEW

ESTIMATED QUANTITIES COMPUTED BY: G.J. VERIFIED BY: F.W.
CHECKED BY: DRAWN BY: Johnson DESIGNED BY:
DATE CHECKED: DATE DRAWN: 06/26/80 SCALE: As Shown

STANDARD DWG. NO. CS-65

STANDARD DWG. NO. CS-66

REFERENCE PROJECT NUMBER	FISCAL YEAR	SHEET NUMBER
	2003	

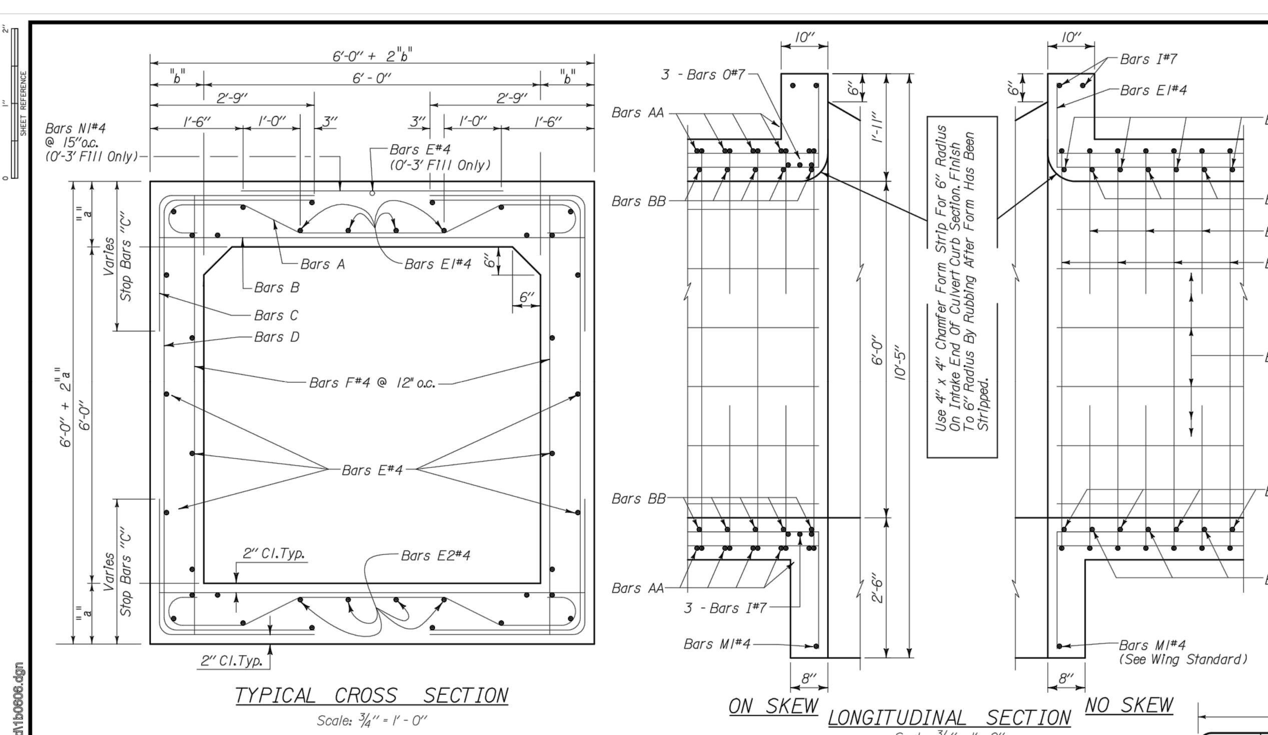

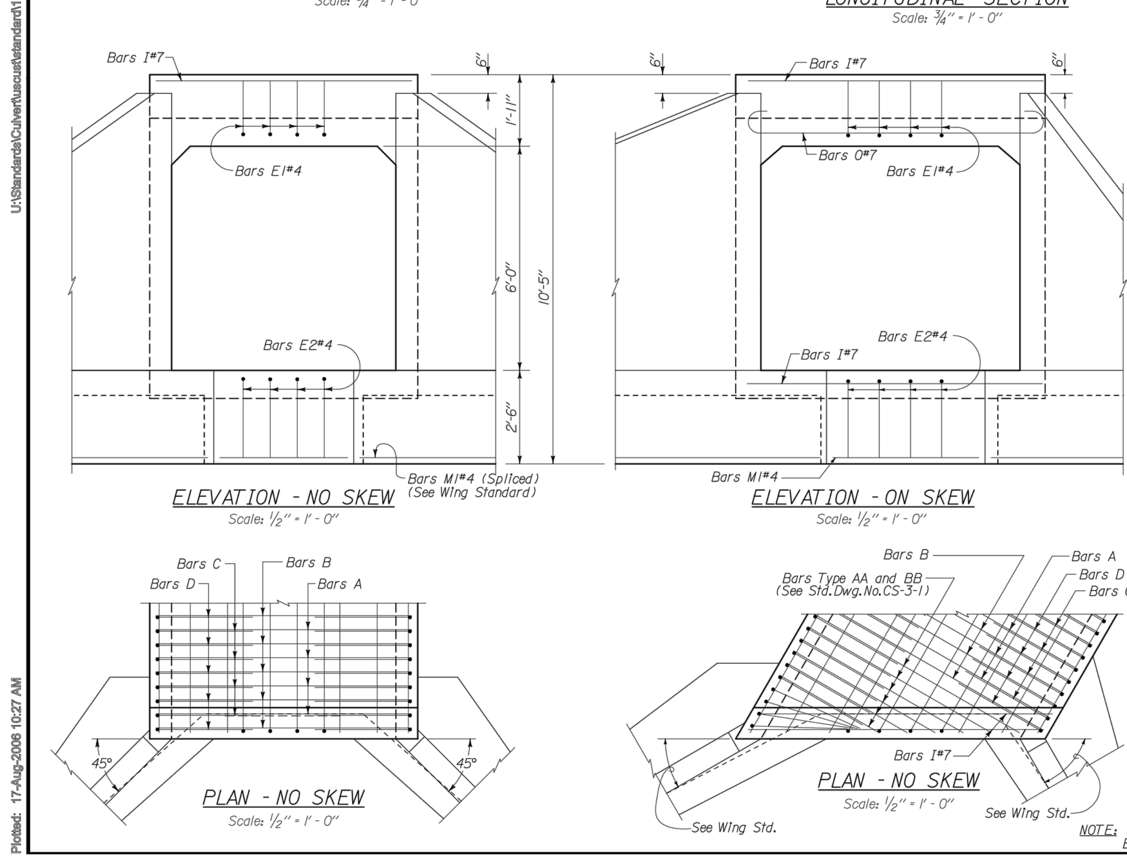

NOTE: All Slab Reinforcing Bars Shall Be Cut To Fit Skew And Hooked.

Fill			Bars				Total Length
0'-3'	1'-4"	1'-0"	Bars A#5	2'-2"	1'-0"	1'-4"	8'-2"
3'-6'	1'-4"	1'-0"	Bars A#5	2'-2"	1'-0"	1'-4"	8'-2"
6'-12'	1'-4"	1'-0"	Bars A#4	2'-2"	1'-0"	1'-4"	8'-0"
12'-18'	1'-4"	1'-0"	Bars A#5	2'-2"	1'-0"	1'-4"	8'-2"
18'-24'	1'-4"	1'-0"	Bars A#5	2'-4"	1'-0"	1'-4"	8'-4"
24'-30'	1'-4"	1'-0"	Bars A#5	2'-5"	1'-0"	1'-4"	8'-5½"
30'-36'	1'-4"	1'-0"	Bars A#6	2'-7"	1'-0"	1'-4"	8'-10"
36'-42'	1'-4"	1'-0"	Bars A#6	2'-8"	1'-0"	1'-4"	9'-0"
42'-48'	1'-4"	1'-0"	Bars A#7	2'-9"	1'-0"	1'-4"	9'-5½"
48'-54'	1'-4"	1'-0"	Bars A#7	2'-10"	1'-0"	1'-4"	9'-7"
54'-60'	1'-4"	1'-0"	Bars A#7	2'-11"	1'-0"	1'-4"	9'-8½"
60'-66'	1'-4"	1'-0"	Bars A#7	3'-0"	1'-0"	1'-4"	9'-10"
66'-72'	1'-4"	1'-0"	Bars A#8	3'-1"	1'-0"	1'-4"	10'-1½"

Fill	Vertical (o.o.)
0'-3'	5"
3'-12'	5"
12'-24'	5"
24'-30'	5½"
30'-36'	6"
36'-42'	7"
42'-48'	7½"
48'-54'	8"
54'-60'	8½"
60'-66'	9"
66'-72'	9½" o.o.

Fill	Diagonal
66'-72'	1'-3¼"
60'-66'	1'-3"
54'-60'	1'-2¾"
48'-54'	1'-2½"
42'-48'	1'-2¼"
36'-42'	1'-2"
30'-36'	1'-1½"
24'-30'	1'-1¼"
18'-24'	1'-1"
12'-18'	1'-1"
6'-12'	1'-1"
3'-6'	1'-1"
0'-3'	1'-1" o.o.

0° SKEW

Bars I#7 - 4 Req'd	6'-10"
Bars M1#4 - 2 Req'd	2'-10"

30° SKEW

		Total Length
Bars I#7 - 10 Req'd	7'-11"	
Bars M1#4 - 2 Req'd	3'-4"	
Bars O#7 - 6 Req'd.	7'-11" o.o.	9'-7"

45° SKEW

		Total Length
Bars I#7 - 10 Req'd	9'-8"	
Bars M1#4 - 2 Req'd	4'-5"	
Bars O#7 - 6 Req'd.	9'-8" o.o.	11'-4"

60° SKEW

		Total Length
Bars I#7 - 10 Req'd	13'-8"	
Bars M1#4 - 2 Req'd	6'-10"	
Bars O#7 - 6 Req'd.	13'-8" o.o.	15'-4"

2'-7" o.o.

Fill	Bars		Total Length
0'-3'	Bars D#4	7'-2" o.o.	12'-4"
3'-6'	Bars D#4	7'-2" o.o.	12'-4"
6'-12'	Bars D#4	7'-2" o.o.	12'-4"
12'-18'	Bars D#5	7'-2" o.o.	12'-4"
18'-24'	Bars D#5	7'-2" o.o.	12'-4"
24'-30'	Bars D#5	7'-3" o.o.	12'-5"
30'-36'	Bars D#5	7'-4" o.o.	12'-6"
36'-42'	Bars D#6	7'-6" o.o.	12'-8"
42'-48'	Bars D#7	7'-7" o.o.	12'-9"
48'-54'	Bars D#7	7'-8" o.o.	12'-10"
54'-60'	Bars D#7	7'-9" o.o.	12'-11"
60'-66'	Bars D#7	7'-10" o.o.	13'-0"
66'-72'	Bars D#8	7'-11" o.o.	13'-1"

2'-7" o.o.; Fill 0'-36': 2'-5" o.o.; Fill 36'-72': 2'-11" o.o.

Fill	Bars	Total Length
0'-36'	Bars C	5'-0"
36'-72'	Bars C	5'-6"

Fill	Bars	Length
0'-6'	Bars B#5	6'-10"
6'-12'	Bars B#4	6'-10"
12'-18'	Bars B#5	6'-10"
18'-24'	Bars B#5	7'-0"
24'-30'	Bars B#6	7'-1"
30'-36'	Bars B#6	7'-3"
36'-42'	Bars B#6	7'-4"
42'-48'	Bars B#7	7'-5"
48'-54'	Bars B#7	7'-6"
54'-60'	Bars B#7	7'-7"
60'-66'	Bars B#7	7'-8"
66'-72'	Bars B#8	7'-9"

Fill	Bars	Length
0'-3'	Bars N1#4	4'-8"

Fill	Bars	Length
0'-3'	Bars F#4	7'-2"
3'-12'	Bars F#4	7'-2"
12'-18'	Bars F#4	7'-2"
18'-24'	Bars F#4	7'-2"
24'-30'	Bars F#4	7'-3"
30'-36'	Bars F#4	7'-4"
36'-42'	Bars F#4	7'-6"
42'-48'	Bars F#4	7'-7"
48'-54'	Bars F#4	7'-8"
54'-60'	Bars F#4	7'-9"
60'-66'	Bars F#4	7'-10"
66'-72'	Bars F#4	7'-11"

Fill	"a"	"b"	Bars A & B	Bars C & D
0'-3'	9"	7"	# 5 @ 10" o.c.	# 4 @ 10" o.c.
3'-6'	9"	7"	# 5 @ 10" o.c.	# 4 @ 10" o.c.
6'-12'	9"	7"	# 4 @ 12" o.c.	# 4 @ 12" o.c.
12'-18'	9"	7"	# 5 @ 13" o.c.	# 5 @ 13" o.c.
18'-24'	9"	8"	# 5 @ 10" o.c.	# 5 @ 10" o.c.
24'-30'	9½"	8½"	# 5 @ 9" o.c.	# 5 @ 9" o.c.
30'-36'	10"	9½"	# 6 @ 11" o.c.	# 6 @ 11" o.c.
36'-42'	11"	10"	# 6 @ 11" o.c.	# 6 @ 11" o.c.
42'-48'	11½"	10½"	# 7 @ 13" o.c.	# 7 @ 13" o.c.
48'-54'	12"	11"	# 7 @ 12" o.c.	# 7 @ 12" o.c.
54'-60'	12½"	11½"	# 7 @ 12" o.c.	# 7 @ 12" o.c.
60'-66'	13"	12"	# 7 @ 11" o.c.	# 7 @ 11" o.c.
66'-72'	13½"	12½"	# 8 @ 14" o.c.	# 8 @ 14" o.c.

ESTIMATED QUANTITIES

FILL	PER.LIN.FT.BB'L.		CURBS & TOEWALLS 0° SKEW		30° SKEW		45° SKEW		60° SKEW	
	C.Y.CONC.	LB.REINF.	C.Y.CONC.	LB.REINF.	C.Y.CONC.	LB.REINF.	C.Y.CONC.	LB.REINF.	C.Y.CONC.	LB.REINF.
0'-3'	0.67	113	0.88	80	1.02	304	1.27	363	1.83	497
3'-6'	0.67	110	0.88	80	1.02	304	1.27	363	1.83	497
6'-12'	0.67	86	0.88	80	1.02	304	1.27	363	1.83	497
12'-18'	0.67	109								
18'-24'	0.72	131								
24'-30'	0.76	142								
30'-36'	0.83	163								
36'-42'	0.91	168								
42'-48'	0.95	191								
48'-54'	1.00	205								
54'-60'	1.05	206								
60'-66'	1.10	223								
66'-72'	1.15	230								

THESE DRAWINGS REPRESENT DESIGNS PREPARED FOR USE BY THE ALABAMA DEPARTMENT OF TRANSPORTATION; AND ARE NOT TO BE COPIED, REPRODUCED, ALTERED, OR USED BY ANYONE, OR ANY ORGANIZATION, WITHOUT THE EXPRESSED WRITTEN CONSENT OF THE ALABAMA DEPARTMENT OF TRANSPORTATION REPRESENTATIVE AUTHORIZED TO APPROVE SUCH USE. ANYONE MAKING UNAUTHORIZED USE OF THESE DRAWINGS MAY BE PROSECUTED TO THE FULLEST EXTENT OF THE LAW.

DESIGN SECTION SUPERVISOR
ASSISTANT BRIDGE ENGINEER
BRIDGE ENGINEER

ALABAMA DEPARTMENT OF TRANSPORTATION

THIS STANDARD TO BE USED WTH ANY OF THE FOLLOWING STANDARDS
CS-3-1 & Wing Std. For Required Wing.

REVISIONS
1. Raised Fill Heights 04/20/73 - F.W.
2. Rev.Reinf. 0'-3' Fill 01/17/79 - R.T.
3. Skew Area and Reinf. 09/08/80 - F.W.
4. Misc.Corr. 05/27/82 R.T.
5. New Design 01/14/85 J.A.D.
6. Fill Height Reduced 08/11/00 - M.G.M
7. Digitized 03/05/03 - VTW

STANDARD
REINFORCED CONCRETE BOX CULVERT
OPENING SINGLE 6'x6'
FILL 0' - 72' ANY SKEW

ESTIMATED QUANTITIES COMPUTED BY: J.A.D. VERIFIED BY:
CHECKED BY: DRAWN BY: Johnson DESIGNED BY: T.J.D.
DATE CHECKED: DATE DRAWN: 09/11/70 SCALE: As Shown

STANDARD DWG. NO. CS-66

Plotted: 17-Aug-2006 10:27 AM
U:\Standards\Culvert\uscust\standard\1b0606.dgn

STANDARD DWG. NO. CS-86

REFERENCE PROJECT NUMBER	FISCAL YEAR	SHEET NUMBER
	2003	

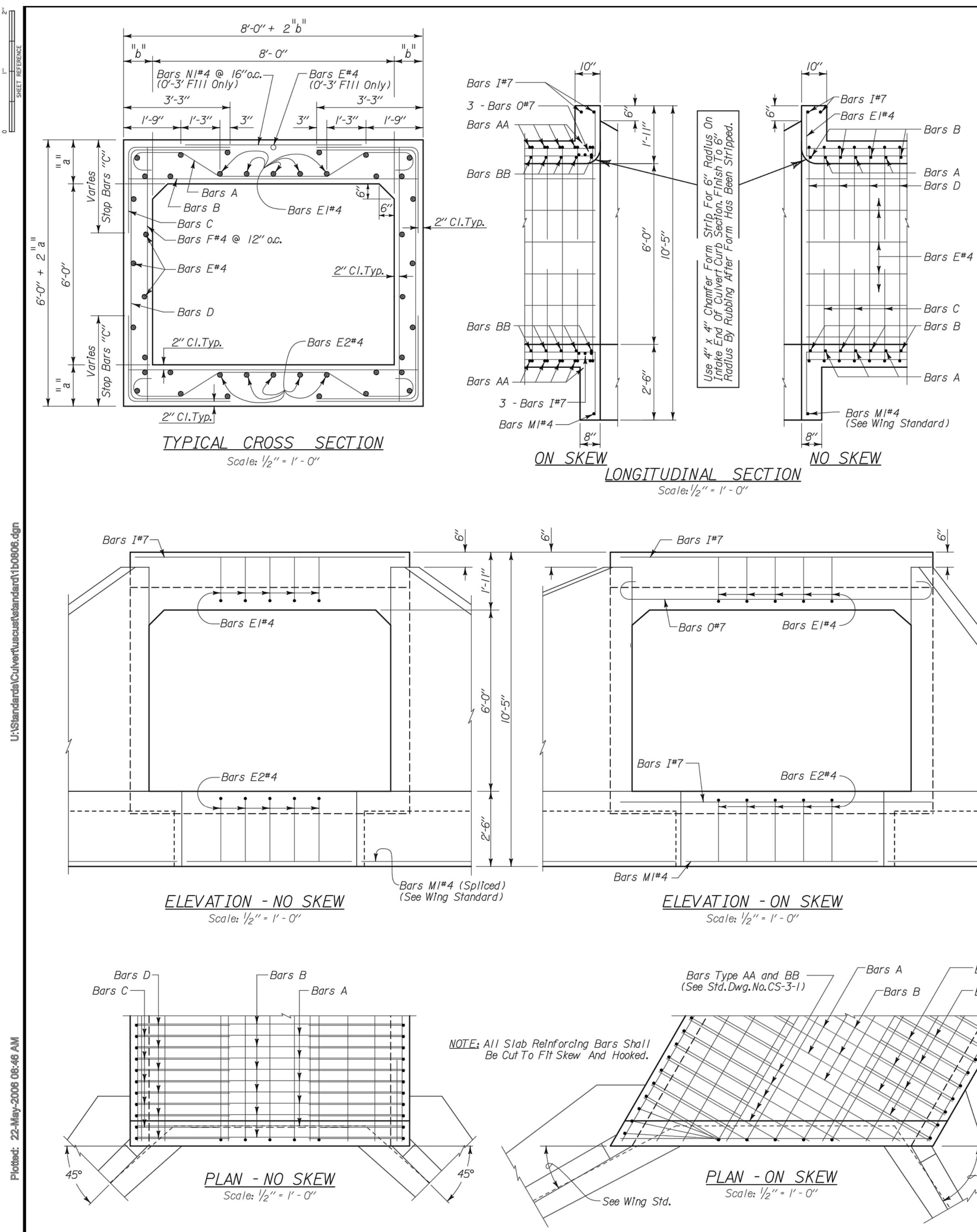

NOTE: All Slab Reinforcing Bars Shall Be Cut To Fit Skew And Hooked.

Fill	Bars	Length
0'-3'	Bars B#5	8'-10"
3'-6'	Bars B#4	8'-10"
6'-12'	Bars B#5	8'-10"
12'-18'	Bars B#6	9'-0"
18'-24'	Bars B#6	9'-2"
24'-30'	Bars B#7	9'-3"
30'-36'	Bars B#7	9'-3"
36'-42'	Bars B#8	9'-4"
42'-48'	Bars B#9	9'-4"
48'-54'	Bars B#9	9'-5"
54'-60'	Bars B#9	9'-6"
60'-66'	Bars B#9	9'-7"
66'-72'	Bars B#9	9'-8"

Fill	Bars	Length
0'-3'	Bars F#4	7'-2"
3'-6'	Bars F#4	7'-0"
6'-12'	Bars F#4	7'-2"
12'-18'	Bars F#4	7'-4"
18'-24'	Bars F#4	7'-6"
24'-30'	Bars F#4	7'-9"
30'-36'	Bars F#4	7'-11"
36'-42'	Bars F#4	8'-1"
42'-48'	Bars F#4	8'-3"
48'-54'	Bars F#4	8'-5"
54'-60'	Bars F#4	8'-7"
60'-66'	Bars F#4	8'-8"
66'-72'	Bars F#4	8'-10"

Fill 0'-72': 3'-1" o.o.

Fill	Bars		Total Length
0'-3'	Bars D#4	7'-2" o.o.	13'-4"
3'-6'	Bars D#4	7'-0" o.o.	13'-2"
6'-12'	Bars D#5	7'-2" o.o.	13'-4"
12'-18'	Bars D#5	7'-4" o.o.	13'-6"
18'-24'	Bars D#5	7'-6" o.o.	13'-8"
24'-30'	Bars D#6	7'-9" o.o.	13'-11"
30'-36'	Bars D#6	7'-11" o.o.	14'-1"
36'-42'	Bars D#7	8'-1" o.o.	14'-3"
42'-48'	Bars D#7	8'-3" o.o.	14'-5"
48'-54'	Bars D#7	8'-5" o.o.	14'-7"
54'-60'	Bars D#7	8'-7" o.o.	14'-9"
60'-66'	Bars D#7	8'-8" o.o.	14'-10"
66'-72'	Bars D#7	8'-10" o.o.	15'-0"

Fill 0'-72': 3'-1" o.o.; Fill 36'-72': 3'-4" o.o.; Fill 0'-36': 2'-10" o.o.

Fill	Bars	Total Length
0'-36'	Bars C	5'-11"
36'-72'	Bars C	6'-5"

Fill	Bars	Length
0'-3'	Bars N1#4	5'-10"

0° SKEW

Fill		
0'-6'	Bars I#7 - 4 Req'd	8'-10"
6'-12'	Bars I#7 - 4 Req'd	8'-10"
0'-12'	Bars M1#4 - 2 Req'd	4'-10"

30° SKEW

Fill			Total Length
0'-12'	Bars I#7 - 10 Req'd	10'-2"	
0'-12'	Bars M1#4 - 2 Req'd	5'-8"	
0'-12'	Bars O#7 - 6 Req'd	10'-2" o.o.	11'-10"

45° SKEW

Fill			Total Length
0'-12'	Bars I#7 - 10 Req'd	12'-6"	
0'-12'	Bars M1#4 - 2 Req'd	7'-4"	
0'-12'	Bars O#7 - 6 Req'd	12'-6" o.o.	14'-2"

60° SKEW

Fill			Total Length
0'-12'	Bars I#7 - 10 Req'd	17'-8"	
0'-12'	Bars M1#4 - 2 Req'd	11'-4"	
0'-12'	Bars O#7 - 6 Req'd	17'-8" o.o.	19'-4"

Fill			Bars				Total Length
0'-3'	1'-7"	1'-3"	Bars A#5	3'-2"	1'-3"	1'-7"	10'-1½"
3'-6'	1'-7"	1'-3"	Bars A#4	3'-2"	1'-3"	1'-7"	9'-11"
6'-12'	1'-7"	1'-3"	Bars A#5	3'-2"	1'-3"	1'-7"	10'-1½"
12'-18'	1'-7"	1'-3"	Bars A#6	3'-4"	1'-3"	1'-7"	10'-6½"
18'-24'	1'-7"	1'-3"	Bars A#6	3'-6"	1'-3"	1'-7"	10'-9"
24'-30'	1'-7"	1'-3"	Bars A#7	3'-7"	1'-3"	1'-7"	11'-3½"
30'-36'	1'-7"	1'-3"	Bars A#7	3'-7"	1'-3"	1'-7"	11'-4½"
36'-42'	1'-7"	1'-3"	Bars A#8	3'-8"	1'-3"	1'-7"	11'-8½"
42'-48'	1'-7"	1'-3"	Bars A#9	3'-8"	1'-3"	1'-7"	12'-6"
48'-54'	1'-7"	1'-3"	Bars A#9	3'-9"	1'-3"	1'-7"	12'-8"
54'-60'	1'-7"	1'-3"	Bars A#9	3'-10"	1'-3"	1'-7"	12'-10½"
60'-66'	1'-7"	1'-3"	Bars A#9	3'-11"	1'-3"	1'-7"	13'-0"
66'-72'	1'-7"	1'-3"	Bars A#9	4'-0"	1'-3"	1'-7"	13'-2½"

Fill	Vertical (o.o.)
0'-3'	5"
3'-6'	4"
6'-12'	5"
12'-18'	6"
18'-24'	7"
24'-30'	8½"
30'-36'	9½"
36'-42'	10½"
42'-48'	11½"
48'-54'	1'-0½"
54'-60'	1'-1½"
60'-66'	1'-2"
66'-72'	1'-3" o.o.

Fill	Diagonal
66'-72'	1'-9¼"
60'-66'	1'-8½"
54'-60'	1'-8¼"
48'-54'	1'-7½"
42'-48'	1'-7"
36'-42'	1'-6¼"
30'-36'	1'-5¾"
24'-30'	1'-5¼"
18'-24'	1'-4½"
12'-18'	1'-4¼"
6'-12'	1'-3¾"
3'-6'	1'-3½"
0'-3'	1'-3¾" o.o.

Fill	"a"	"b"	Bars A & B	Bars C & D
0'-3'	9"	7"	# 5 @ 8" o.c.	# 4 @ 8" o.c.
3'-6'	8"	7"	# 4 @ 8" o.c.	# 4 @ 8" o.c.
6'-12'	9"	7"	# 5 @ 9" o.c.	# 5 @ 9" o.c.
12'-18'	10"	8"	# 6 @ 10" o.c.	# 5 @ 10" o.c.
18'-24'	11"	9"	# 6 @ 9" o.c.	# 5 @ 9" o.c.
24'-30'	12½"	9½"	# 7 @ 11" o.c.	# 6 @ 11" o.c.
30'-36'	13½"	9½"	# 7 @ 9" o.c.	# 6 @ 9" o.c.
36'-42'	14½"	10"	# 8 @ 11" o.c.	# 7 @ 11" o.c.
42'-48'	15½"	10"	# 9 @ 13" o.c.	# 7 @ 13" o.c.
48'-54'	16½"	10½"	# 9 @ 12" o.c.	# 7 @ 12" o.c.
54'-60'	17½"	11"	# 9 @ 12" o.c.	# 7 @ 12" o.c.
60'-66'	18"	11½"	# 9 @ 11" o.c.	# 7 @ 11" o.c.
66'-72'	19"	12"	# 9 @ 11" o.c.	# 7 @ 11" o.c.

ESTIMATED QUANTITIES

FILL	PER.LIN.FT.BB'L.		CURBS & TOEWALLS 0° SKEW		30° SKEW		45° SKEW		60° SKEW	
	C.Y.CONC.	LB.REINF.	C.Y.CONC.	LB.REINF.	C.Y.CONC.	LB.REINF.	C.Y.CONC.	LB.REINF.	C.Y.CONC.	LB.REINF.
0'-3'	.78	149	1.20	104	1.38	386	1.72	465	2.47	639
3'-6'	.73	125	1.27	104	1.47	386	1.82	465	2.61	639
6'-12'	.78	161	1.20	104	1.38	386	1.72	465	2.47	639
12'-18'	.89	172								
18'-24'	.99	189								
24'-30'	1.10	215								
30'-36'	1.16	255								
36'-42'	1.25	283								
42'-48'	1.31	279								
48'-54'	1.40	302								
54'-60'	1.48	305								
60'-66'	1.54	331								
66'-72'	1.63	334								

THESE DRAWINGS REPRESENT DESIGNS PREPARED FOR USE BY THE ALABAMA DEPARTMENT OF TRANSPORTATION; AND ARE NOT TO BE COPIED, REPRODUCED, ALTERED, OR USED BY ANYONE, OR ANY ORGANIZATION, WITHOUT THE EXPRESSED WRITTEN CONSENT OF THE ALABAMA DEPARTMENT OF TRANSPORTATION REPRESENTATIVE AUTHORIZED TO APPROVE SUCH USE. ANYONE MAKING UNAUTHORIZED USE OF THESE DRAWINGS MAY BE PROSECUTED TO THE FULLEST EXTENT OF THE LAW.

DESIGN SECTION SUPERVISOR
ASSISTANT BRIDGE ENGINEER
BRIDGE ENGINEER

ALABAMA DEPARTMENT OF TRANSPORTATION

THIS STANDARD TO BE USED WTH ANY OF THE FOLLOWING STANDARDS
CS-3-1 & Wing Std. For Required Wing.

REVISIONS
1. Raised Fill Heights 08/18/75 - G.J.
2. Rev.Reinf. 0'-3' Fill 01/24/79 - R.T.
3. Skew Area and Reinf. 11/24/80 - G.J.
4. Digitized 04/16/03 - VTW

STANDARD
REINFORCED CONCRETE BOX CULVERT
OPENING SINGLE 8'x6'
FILL 0' - 72' ANY SKEW

ESTIMATED QUANTITIES COMPUTED BY: G.J. VERIFIED BY: F.W.
CHECKED BY: F.W. DRAWN BY: G.J. DESIGNED BY:
DATE CHECKED: DATE DRAWN: 09/29/70 SCALE: As Shown

STANDARD DWG. NO. CS-86

Plotted: 22-May-2006 08:46 AM
U:\Standards\Culvert\uscust\standard\1b0806.dgn

LBYD
Civil and Structural Engineers
Birmingham, Alabama
Atlanta, Georgia
Huntsville, Alabama
Tampa Bay, Florida
www.lbyd.com

LBYD Project Number
302-10-002A

LBYD, Inc.
305 Church Street SW
Suite 719
Huntsville, AL 35801
Phone (256) 533-1575
Fax (256) 533-1744

© copyright 2011
These drawings and design intent are the sole property of City of Huntsville which may not be reproduced without written permission.

HUNTSVILLE
The Star of Alabama

DETAILS

REDSTONE GATEWAY - PACKAGE 1F
ROADWAY IMPROVEMENTS
CITY OF HUNTSVILLE
HUNTSVILLE, ALABAMA

REV	DATE	DRAWN	CHECKED	DESCRIPTION
1	1/30/12	TBE	TAR	STORM & GRADING RE-DESIGN

TRAFFIC | REAL ESTATE | PE | DRAINAGE
COH REVIEW

DATE: JANUARY 27, 2012
CHECKED: RAN
DRAWN: BSJ

C14.9-R1

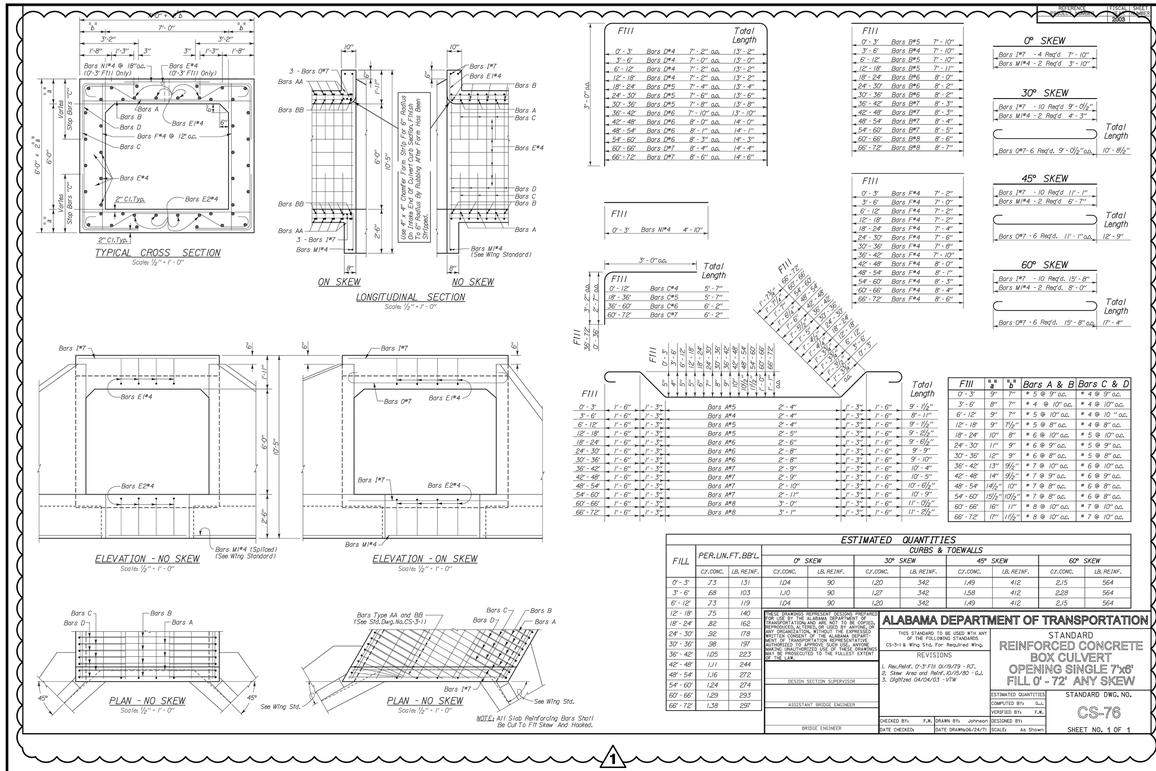

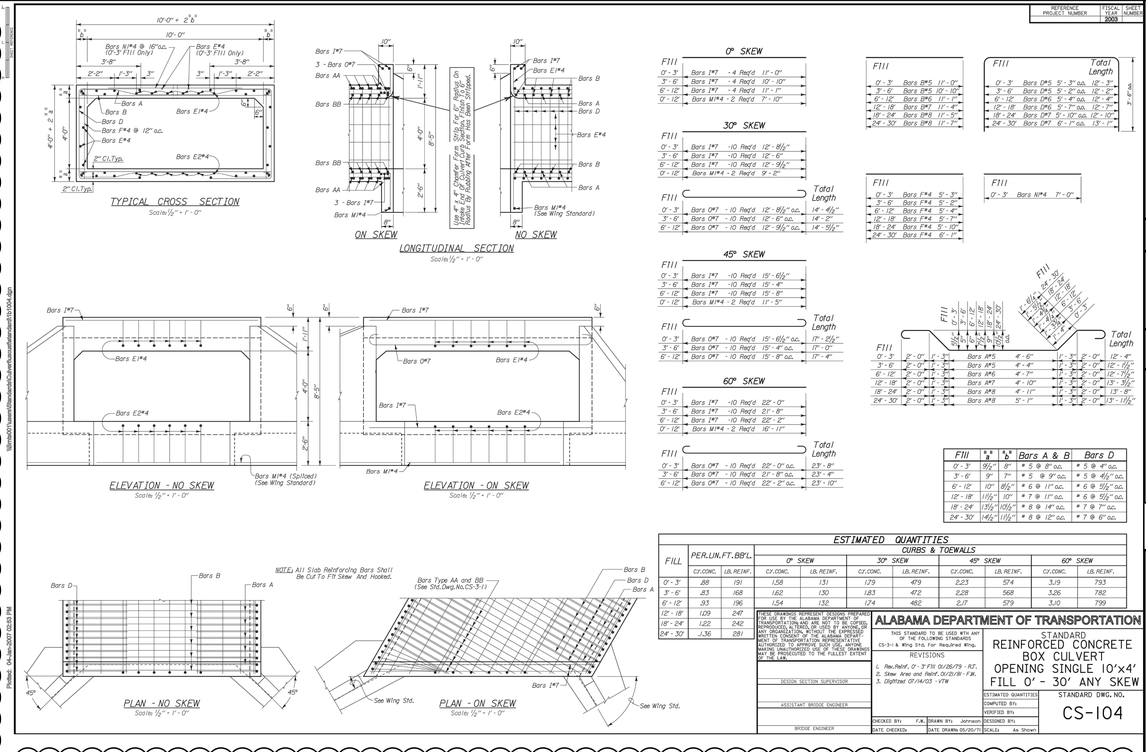

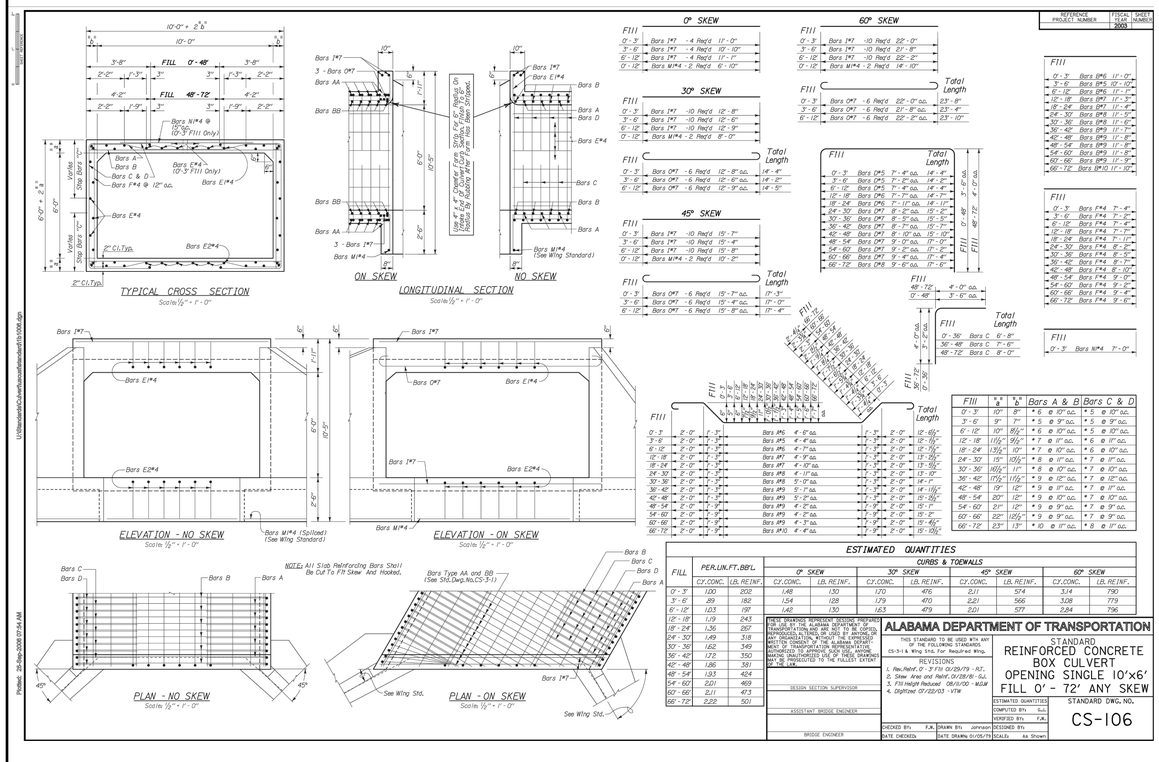

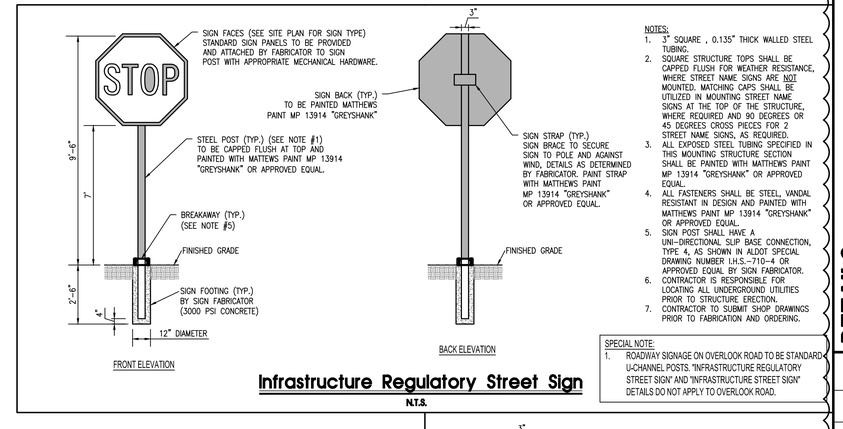

NOTES:
1. 3" SQUARE , 0.135" THICK WALLED STEEL TUBING.
2. SQUARE STRUCTURE TOPS SHALL BE CAPPED FLUSH FOR WEATHER RESISTANCE, WHERE STREET NAME SIGNS ARE NOT MOUNTED. MATCHING CAPS SHALL BE UTILIZED IN MOUNTING STREET NAME SIGNS AT THE TOP OF THE STRUCTURE, WHERE REQUIRED AND 90 DEGREES OR 45 DEGREES CROSS PIECES FOR 2 STREET NAME SIGNS, AS REQUIRED.
3. ALL EXPOSED STEEL TUBING SPECIFIED IN THIS MOUNTING STRUCTURE SECTION SHALL BE PAINTED WITH MATTHEWS PAINT MP 13914 "GREYSHANK" OR APPROVED EQUAL.
4. ALL FASTENERS SHALL BE STEEL, VANDAL RESISTANT IN DESIGN AND PAINTED WITH MATTHEWS PAINT MP 13914 "GREYSHANK" OR APPROVED EQUAL.
5. SIGN POST SHALL HAVE A UNI-DIRECTIONAL SLIP BASE CONNECTION, TYPE 4, AS SHOWN IN ALDOT SPECIAL DRAWING NUMBER I.H.S.-710-4 OR APPROVED EQUAL BY SIGN FABRICATOR.
6. CONTRACTOR IS RESPONSIBLE FOR LOCATING ALL UNDERGROUND UTILITIES PRIOR TO STRUCTURE ERECTION.
7. CONTRACTOR TO SUBMIT SHOP DRAWINGS PRIOR TO FABRICATION AND ORDERING.

SPECIAL NOTE:
1. ROADWAY SIGNAGE ON OVERLOOK ROAD TO BE STANDARD U-CHANNEL POSTS. "INFRASTRUCTURE REGULATORY STREET SIGN" AND "INFRASTRUCTURE STREET SIGN" DETAILS DO NOT APPLY TO OVERLOOK ROAD.

Infrastructure Regulatory Street Sign

N.T.S.

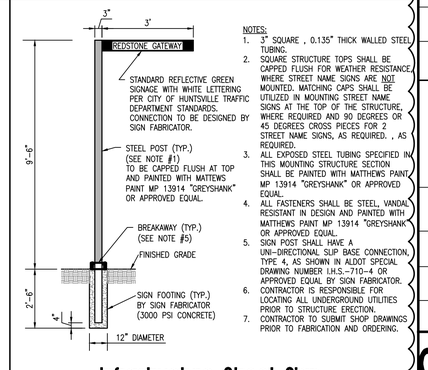

NOTES:
1. 3" SQUARE , 0.135" THICK WALLED STEEL TUBING.
2. SQUARE STRUCTURE TOPS SHALL BE CAPPED FLUSH FOR WEATHER RESISTANCE, WHERE STREET NAME SIGNS ARE NOT MOUNTED. MATCHING CAPS SHALL BE UTILIZED IN MOUNTING STREET NAME SIGNS AT THE TOP OF THE STRUCTURE, WHERE REQUIRED AND 90 DEGREES OR 45 DEGREES CROSS PIECES FOR 2 STREET NAME SIGNS, AS REQUIRED. , AS REQUIRED.
3. ALL EXPOSED STEEL TUBING SPECIFIED IN THIS MOUNTING STRUCTURE SECTION SHALL BE PAINTED WITH MATTHEWS PAINT MP 13914 "GREYSHANK" OR APPROVED EQUAL.
4. ALL FASTENERS SHALL BE STEEL, VANDAL RESISTANT IN DESIGN AND PAINTED WITH MATTHEWS PAINT MP 13914 "GREYSHANK" OR APPROVED EQUAL.
5. SIGN POST SHALL HAVE A UNI-DIRECTIONAL SLIP BASE CONNECTION, TYPE 4, AS SHOWN IN ALDOT SPECIAL DRAWING NUMBER I.H.S.-710-4 OR APPROVED EQUAL BY SIGN FABRICATOR.
6. CONTRACTOR IS RESPONSIBLE FOR LOCATING ALL UNDERGROUND UTILITIES PRIOR TO STRUCTURE ERECTION.
7. CONTRACTOR TO SUBMIT SHOP DRAWINGS PRIOR TO FABRICATION AND ORDERING.

Infrastructure Street Sign

N.T.S.

LBYD
Civil and Structural Engineers
Birmingham, Alabama
Atlanta, Georgia
Huntsville, Alabama
Tampa Bay, Florida
www.lbyd.com

LBYD Project Number
302-10-002A

LBYD, Inc.
305 Church Street SW
Suite 719
Huntsville, AL 35801
Phone (256) 533-1575
Fax (256) 533-1744

© copyright 2011
These drawings and design intent are the sole property of City of Huntsville which may not be reproduced without written permission.

HUNTSVILLE
The Star of Alabama

DETAILS

REDSTONE GATEWAY - PACKAGE 1F
ROADWAY IMPROVEMENTS
CITY OF HUNTSVILLE
HUNTSVILLE, ALABAMA

REV	DATE	DRAWN	TBE	TAR	ROADWAY SIGNAGE DETAILS	TRAFFIC	REAL ESTATE	PE	DRAINAGE
1	1/30/12	BSJ							

DRAWN	REV	DATE	DRAWN	CHECKED	DESCRIPTION	DATE: JANUARY 27, 2012
BSJ					PLAN	

C14.10-R1

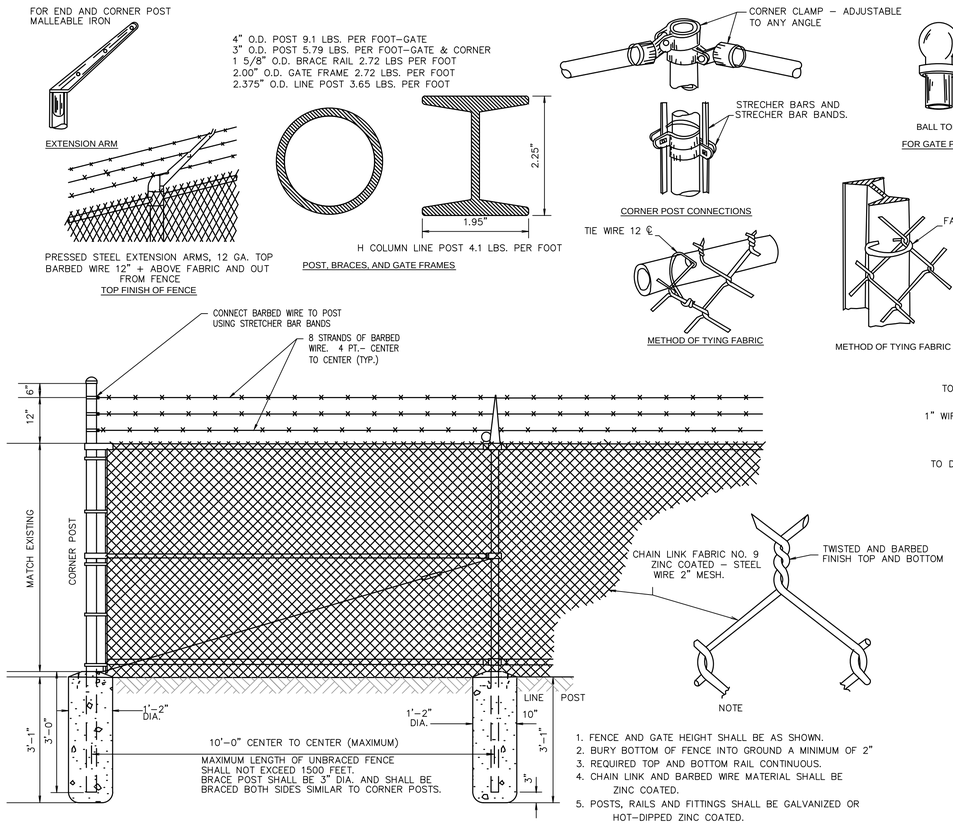

1. FENCE AND GATE HEIGHT SHALL BE AS SHOWN.
2. BURY BOTTOM OF FENCE INTO GROUND A MINIMUM OF 2"
3. REQUIRED TOP AND BOTTOM RAIL CONTINUOUS.
4. CHAIN LINK AND BARBED WIRE MATERIAL SHALL BE ZINC COATED.
5. POSTS, RAILS AND FITTINGS SHALL BE GALVANIZED OR HOT-DIPPED ZINC COATED.
6. CONSTRUCTION SHALL BE IN A WORKMANLIKE MANNER WITH ACCURATE HORIZONTAL AND VERTICAL ALINEMENT AND SECURE TIGHT CONNECTIONS.
7. FENCE FABRIC SHALL BE FASTENED TO LINE POST AT 15" INTERVALS AND FASTENED TO ALL RAILS AND TENSION WIRE AT 12" INTERVALS.

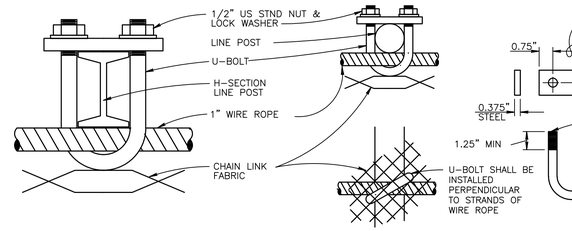

U-BOLT AT LINE POST DETAILS

NO SCALE

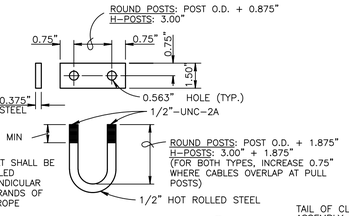

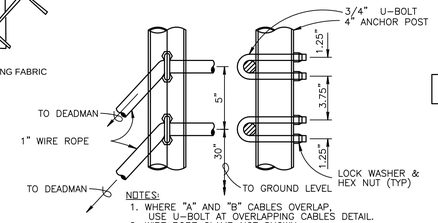

NOTES:
1. WHERE "A" AND "B" CABLES OVERLAP, USE U-BOLT AT OVERLAPPING CABLES DETAIL.
2. WIRE ROPE CLAMP NOT SHOWN.
3. VERIFY ASSEMBLY BEFORE ORDERING/FABRICATING.

U-BOLT AT CABLE ANCHOR POST DETAIL

NO SCALE

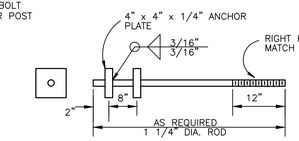

NOTE:
HOT DIP GALVANIZE ANCHOR ASSEMBLY AFTER FABRICATION.

DEADMAN ANCHOR BOLT DETAIL

NO SCALE

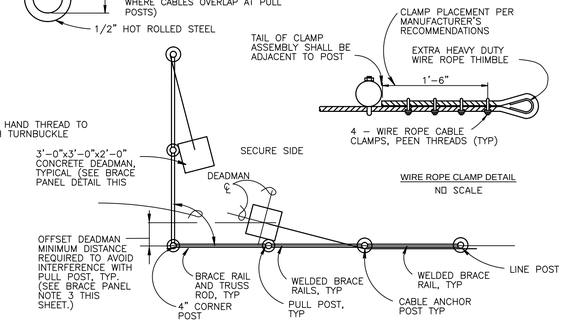

CORNER PLAN

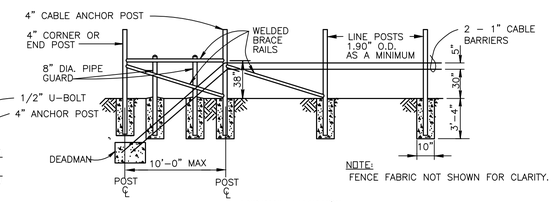

NOTE:
FENCE FABRIC NOT SHOWN FOR CLARITY.

END PANEL ELEVATION

(CORNER PANEL ELEVATION SIMILAR)

CORNER OR END PANEL WITH DEADMAN DETAIL

NO SCALE

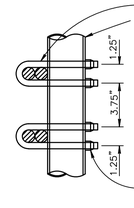

U-BOLT AT OVERLAPPING CABLES DETAIL

NO SCALE

GENERAL NOTES:

1. CABLES SHALL BE CONTINOUS FROM DEADMAN TO DEADMAN. NO SPLICES IN CABLE SHALL BE ALLOWED. CABLE BARRIER SHALL BE INSTALLED BETWEEN FENCE POSTS AND FENCE FABRIC AS PER PLANS. U-BOLTS ON LINE POSTS SHALL BE INSTALLED PERPENDICULAR TO THE STRANDS OF THE WIRE ROPE AND SHALL BE TIGHTENED AFTER SAG IN CABLE BARRIER HAS BEEN REMOVED. BRACE PANELS W/DEADMEN SHALL BE SPACED AT 200 FOOT MAXIMUM INTERVALS AND AT CHANGES IN ALIGNMENT EXCEEDING 45 DEGREES. DEADMAN SPACING IS BASED ON A SPECIFIC VEHICLE WITH A RESULTANT KINETIC ENERGY OF LESS THAN 400 K FOOT POUNDS. FOR LONGER DEADMAN RUNS AN ANALYSIS WILL HAVE TO BE MADE TO DETERMINE EFFECTIVENESS FOR ACCEPTABLE PENETRATION LIMITS.

2. CABLE BARRIER SHALL BE U.S. DOMESTIC 1 INCH 6x19 CLASS WIRE ROPE, REGULAR LAY, EXTRA IMPROVED PLOW STEEL (EIPS), INDEPENDENT WIRE ROPE CORE, (IWRC), CLASS A GALVANIZED, IN ACCORDANCE WITH ASTM A1023/A1023M

3. EYE TO EYE TURNBUCKLES SHALL BE 1-1/4" X 12", TYPE I, FORM 1 CLASS 4 ZINC COATED , IN ACCORDANCE WITH ASTM F1145.

4. WIRE ROPE CLAMPS SHALL BE TYPE I, CLASS 1, GALVANIZED, IN ACCORDANCE WITH FS FF-C-450.

5. U-BOLTS AND HEX NUTS SHALL BE 1/2", GALVANIZED, IN ACCORDANCE WITH ASTM A307 AND ASTM A563.

6. THREADED RODS SHALL BE 1-1/4", GALVANIZED, IN ACCORDANCE WITH ASTM A307 OR A36.

7. WELDED BRACE RAILS SHALL BE INSTALLED AS PER THE PLANS AND AWS D1.1 (STRUCTURAL WELDING CODE - STEEL) AT CORNER, END, GATE, AND PULL POSTS. DAMAGE TO THE GALVANIZED SURFACE DUE TO WELDING SHALL BE REPAIRED WITH "REPAIR STICKS" OF ZINC-CADMIUM ALLOYS OR ZINC-TIN LEAD ALLOYS AS PER AWS WZC.

8. FOR EXISTING FENCES, REPLACE THE LINE POSTS AT THE BEGINNING AND END OF EVERY CABLE RUN WITH A 4" ANCHOR POST AND 4" PULL POST.

9. DEADMAN OFFSET IS PROVIDED TO ALLOW ACCESS TO TURNBUCKLES FOR FUTURE ADJUSTMENT AFTER FENCE FABRIC IS INSTALLED. IF FENCE FABRIC IS NOT TO BE INSTALLED ON THE BARRIER POSTS, OFFSET MAY BE ELIMINATED AS APPROVED.

10. WHEN FENCE FABRIC IS NOT TO BE INSTALLED, PROVIDE POSTS AND FITTINGS IN CONFORMANCE WITH DETAILS SHOWN ON THIS SHEET AND THE REQUIREMENTS FOR FENCE TYPE FE5.

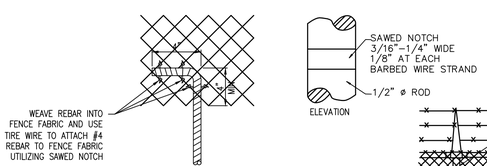

METHOD OF TYING REBAR TO FABRIC

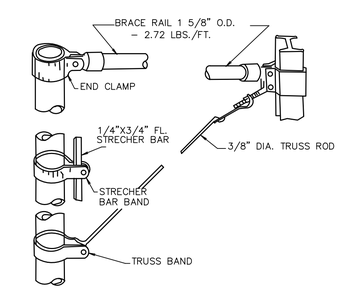

END, GATE AND BRACE POST CONNECTIONS

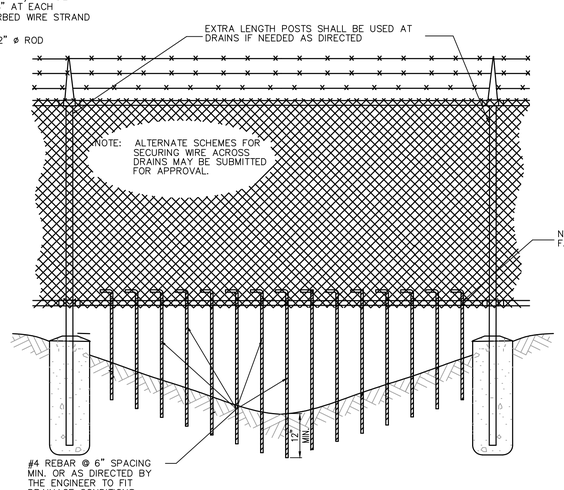

FENCE ARRANGEMENT AT SMALL DRAINS

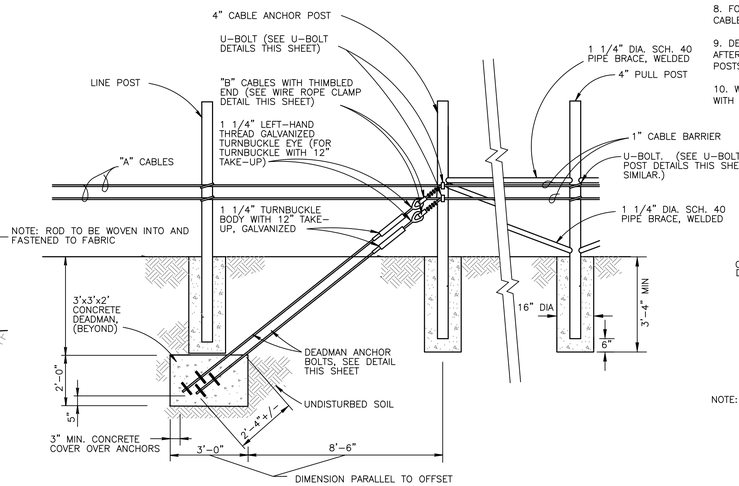

DEADMAN DETAIL

NOTE:
FENCE FABRIC NOT SHOWN FOR CLARITY

NO SCALE

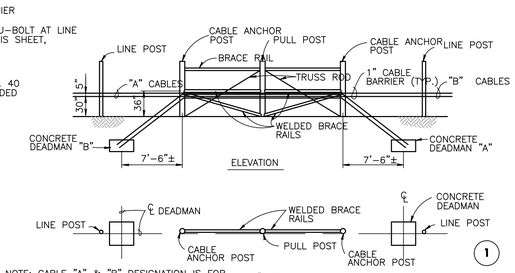

NOTE: CABLE "A" & "B" DESIGNATION IS FOR CLARIFICATION OF ROUTING OF 1"ø CABLES.

BRACE PANEL W/DEADMEN DETAIL

N.T.S.

LBYD
Civil and Structural Engineers
Birmingham, Alabama
Atlanta, Georgia
Huntsville, Alabama
Tampa Bay, Florida
www.lbyd.com

LBYD Project Number
302-10-002A

LBYD, Inc.
305 Church Street SW
Suite 719
Huntsville, AL 35801
Phone (256) 533-1575
Fax (256) 533-1744

© copyright 2011
These drawings and design intent are the sole property of City of Huntsville which may not be reproduced without written permission.

HUNTSVILLE
The Star of Alabama

DETAILS

REDSTONE GATEWAY - PACKAGE 1F
ROADWAY IMPROVEMENTS
CITY OF HUNTSVILLE
HUNTSVILLE, ALABAMA

REV	DATE	DRAWN	CHECKED	DESCRIPTION	DATE	CODE REVIEW
1	1/30/12	TBE	TAR	STORM & GRADING RE-DESIGN	JANUARY 30, 2012	B&A, FDOT, TRAFFIC, PE, DRAINAGE
		BSJ	RAN			

C14.11-R1