REDSTONE GATEWAY

Advancing the Missions of Redstone Arsenal

REDSTONE GATEWAY

PACKAGE I - LAKE F
(UNSECURE AREA)

FOR THE

CITY OF HUNTSVILLE
HUNTSVILLE, ALABAMA

ISSUE FOR CONSTRUCTION

COPT
CORPORATE OFFICE PROPERTIES TRUST

HUNTSVILLE
The Star of Alabama

Jim Wilson & Associates, LLC

LBYD, INC. PROJECT NO. 302-10-002A
CITY OF HUNTSVILLE PROJECT NO. 65-12-SP23

AUGUST 10, 2012

NOTE:
FOR PLOTTING PURPOSES
GRAY SHADES ARE PRESENT
24" X 36" FULL SIZE SHEETS

REVISION INDEX

PROJECT REVISION	REVISED SHEETS	DATE ISSUED
1	T1.0, C1.0, C4.0–C5.2, C6.0–C6.1, C7.2–C7.3	01/21/2013

LOCATION MAP

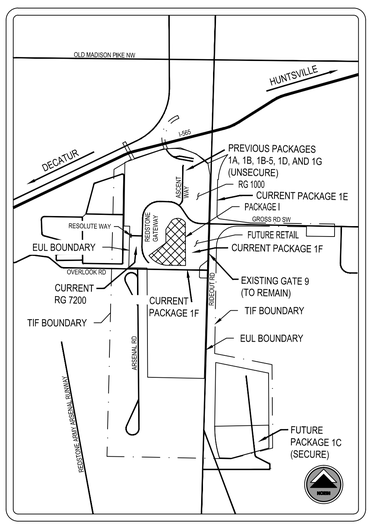

PROJECT TEAM

OWNER:
CITY OF HUNTSVILLE
320 FOUNTAIN CIRCLE
HUNTSVILLE, AL 35801
PHONE: (256) 427-5300
CONTACT: SHANE DAVIS, PE
EMAIL: SHANE.DAVIS@HUNTSVILLEAL.GOV
CONTACT: RON ADAMS, PE
EMAIL: RON.ADAMS@HUNTSVILLEAL.GOV
CONTACT: CHRIS MCNEESE, PE
EMAIL: CHRISTOPHER.MCNEESE@HUNTSVILLEAL.GOV

DEVELOPER:
L.W. REDSTONE, LLC.
305 CHURCH STREET SW
SUITE 719
HUNTSVILLE, AL 35801
CONTACT: GREG HALL
PHONE: (443) 878-6501
EMAIL: GREG.HALL@COPT.COM

CIVIL ENGINEER:
LBYD, INC.
305 CHURCH STREET SW
SUITE 719
HUNTSVILLE, AL 35801
MAIN: (256) 533-1575
CONTACT: TIM ROBERTS, PE
PHONE: (256) 533-1575
EMAIL: TROBERTS@LBYD.COM
CONTACT: RICK NAIL, PE
PHONE: (205) 488-0238
EMAIL: RNAIL@LBYD.COM
CONTACT: BRIAN HATCHER, PE
PHONE: (205) 488-4601
EMAIL: BHATCHER@LBYD.COM

PROJECT MANAGER:
BRASFIELD AND GORRIE L.L.C.
3021 7TH AVENUE SOUTH
BIRMINGHAM, AL 35233
MAIN: (205) 328-4000
CONTACT: MATT KELLEY
PHONE: (205) 714-1322
EMAIL: MKELLEY@BRASFIELDGORRIE.COM
CONTACT: JIM SMITH
PHONE: (615) 613-8017
EMAIL: JSMITH@BRASFIELDGORRIE.COM

GEOTECHNICAL ENGINEER:
BUILDING AND EARTH SCIENCES
2607 LEEMAN FERRY ROAD,
SUITE 5
HUNTSVILLE, AL 35801
MAIN: (256) 713-0056
CONTACT: DON BROWN, PE
PHONE: (205) 836-6300
EMAIL: DBROWN@BUILDINGANDEARTH.COM

SURVEYOR:
BUSBIN ENGINEERING AND SURVEYING, INC.
924 MERIDIAN STREET N
HUNTSVILLE, AL 35801
MAIN: (256) 533-1099
CONTACT: CAREY BUSBIN, PE/PLS
EMAIL: CAREYBUSBIN@BELLSOUTH.NET

LANDSCAPE ARCHITECT:
GREENVIEW STUDIO, INC.
4339 WARREN RD
BIRMINGHAM, AL 35213
PHONE: (251) 923-7367
CONTACT: LOIS SHINDELBOWER, LA
EMAIL: LOIS@GREENVIEWSTUDIO.COM

ELECTRICAL ENGINEER:
TETRA TECH, INC.
101 QUALITY CIRCLE
SUITE 140
HUNTSVILLE, AL 35806
PHONE: (256) 424-4077
CONTACT: CHRIS BRYAN
EMAIL: CHRIS.BRYAN@TETRATECH.COM

REDSTONE GARRISON:
DIRECTORATE OF PUBLIC WORKS
4488 MARTIN ROAD
REDSTONE ARSENAL, AL 35898
CONTACT: CRAIG NORTHRIDGE
PHONE: (256) 955-8504
EMAIL: CRAIG.NORTHRIDGE@US.ARMY.MIL

DRAWING INDEX

T1.0-R1	COVER SHEET
C1.0-R1	PROJECT GENERAL NOTES
C2.0	OVERALL EXISTING CONDITIONS PLAN
C2.1	EXISTING CONDITIONS PLAN
C2.2	EXISTING CONDITIONS PLAN
C2.3	EXISTING CONDITIONS PLAN
C3.0	OVERALL DEMOLITION PLAN
C3.1	DEMOLITION PLAN
C3.2	DEMOLITION PLAN
C3.3	DEMOLITION PLAN
C4.0-R3	SITE LAYOUT & UTILITY PLAN
C5.0-R1	OVERALL GRADING & STORM DRAINAGE PLAN
C5.1-R1	GRADING & STORM DRAINAGE PLAN
C5.2-R1	GRADING & STORM DRAINAGE PLAN
C5.3	STORM PROFILES
C5.4	STORM PROFILES
C6.0-R1	EXISTING EROSION CONTROL PLAN (FOR REFERENCE ONLY)
C6.1-R1	EROSION CONTROL PLAN
C7.0	DETAILS
C7.1	DETAILS
C7.2-R1	DETAILS
C7.3-R1	DETAILS
C7.4	DETAILS
C7.5	DETAILS
C7.6	DETAILS
C8.0	RSA RAILHEAD ACCESS

* ELECTRICAL, LANDSCAPING, HARDSCAPE AND IRRIGATION PLANS TO BE BID SEPARATELY.

ALABAMA REGISTERED No. 26754 PROFESSIONAL ENGINEER
1/21/2013

LBYD
Civil and Structural Engineers
Atlanta, Georgia
Birmingham, Alabama
Huntsville, Alabama
www.lbyd.com

GENERAL NOTES:

1. LBYD, INC. SHALL NOT HAVE AUTHORITY OVER THE SITE CONTRACTOR'S WORK OR RESPONSIBILITIES. LBYD IS NOT RESPONSIBLE FOR SITE SAFETY PROCEDURES OR METHODS OF CONSTRUCTION. IT IS NOT LBYD'S DUTY TO REVIEW THE ADEQUACY OF THE CONTRACTOR'S SAFETY MEASURES IN OR NEAR THE CONSTRUCTION SITE.
2. ALL EXISTING UTILITIES SHOWN ON THESE DRAWINGS ARE APPROXIMATE AND OTHER UTILITIES MAY EXIST. CONTRACTOR MUST HAVE EXISTING UTILITIES LOCATED BY UNDERGROUND LINE LOCATORS AS WELL AS FIELD VERIFIED BY ONSITE PERSONNEL BY "POT HOLING" THE UTILITY WITH POST HOLE DIGGERS PRIOR TO ORDERING MATERIALS OR BEGINNING CONSTRUCTION. ANY DISCREPANCIES SHALL BE REPORTED TO THE OWNER IMMEDIATELY.
3. EXISTING UTILITIES TO REMAIN MAY BE LOCATED WITHIN PROPOSED DEMOLITION AREAS. CONTRACTOR SHALL USE EXTREME CAUTION WHILE WORKING IN THESE AREAS TO ENSURE NO UTILITY SERVICE INTERRUPTIONS TO FACILITIES THAT REMAIN OR TO ADJACENT PROPERTIES.
4. ALL EXISTING IMPROVEMENTS WITHIN THE LIMITS OF CONSTRUCTION ARE TO REMAIN UNLESS SPECIFICALLY NOTED, "TO BE REMOVED".
5. CONTRACTOR SHALL COORDINATE WITH OWNER AND THE UTILITY PROVIDER PRIOR TO THE DISCONNECTING OR REMOVAL OF ANY UTILITY SERVICE. ALL UTILITIES TO BE REMOVED ARE TO BE CAPPED OR PLUGGED OR TERMINATED ACCORDING TO THE UTILITY OWNERS REQUIREMENTS.
6. THE CONTRACTOR SHALL TAKE ALL NECESSARY MEASURES TO PROTECT ADJACENT PROPERTIES AND IS RESPONSIBLE FOR ANY DAMAGE TO EXISTING IMPROVEMENTS ON OR OFF SITE DUE TO THE CONSTRUCTION OF THIS PROJECT. ANY DAMAGE WILL BE REPAIRED AT THE CONTRACTOR'S EXPENSE.
7. WHEN CAVES OR SOLUTION CAVITIES ARE DISCOVERED DURING CONSTRUCTION, WORK SHALL STOP IN THE AREA PENDING FURTHER BIOLOGICAL AND GEOTECHNICAL INVESTIGATIONS.
8. IF DURING CONSTRUCTION THE CONTRACTOR OBSERVES HISTORIC OR ARCHAEOLOGICAL RESOURCES, THEN SUCH OBSERVATIONS SHALL BE REPORTED IMMEDIATELY TO THE OWNER. THE CONTRACTOR SHALL CEASE ALL ACTIVITIES IN THE AREA THAT MAY RESULT IN THE DESTRUCTION OF THESE RESOURCES AND SHALL PREVENT EMPLOYEES FROM TRESPASSING ON, REMOVING, OR OTHERWISE DAMAGING SUCH RESOURCES UNTIL RELEASED BY THE OWNER.
9. MILITARY MUNITIONS - BASED ON THE ENVIRONMENTAL ASSESSMENT THE EUL SITE HAS NOT BEEN IDENTIFIED AS HAVING THE POTENTIAL OF UNEXPLODED ORDINANCE (UXO). IN THE EVENT THAT THE CONTRACTOR DISCOVERS OR UNCOVERS MILITARY MUNITIONS AS DEFINED IN 40 CFR 260, HAZARDOUS WASTE MANAGEMENT SYSTEM HE SHALL STOP WORK IN THAT AREA AND NOTIFY THE OWNER.
10. STORMWATER IMPACTS SHALL BE MINIMIZED DURING CONSTRUCTION WITH APPROPRIATE BMP MEASURES PER THE ALABAMA HANDBOOK FOR EROSION CONTROL, SEDIMENT CONTROL AND STORMWATER MANAGEMENT ON CONSTRUCTION SITES AND URBAN AREAS. THE CONTRACTOR IS RESPONSIBLE FOR DEVELOPING AND IMPLEMENTING A PLAN FOR SECONDARY CONTAINMENT OF STORED FUEL, DRIP PANS UNDER GENERATORS AND STATIONARY VEHICLES, AND MAINTAINING SPILL MITIGATION KITS ON-SITE DURING CONSTRUCTION.
11. WASTE MATERIALS SHALL BE RECYCLED TO THE MAXIMUM EXTENT FEASIBLE.
12. REFER TO THE PROJECT SPECIFICATIONS FOR ADDITIONAL INFORMATION. NOTE THAT NOT ALL SECTIONS OF THE CITY SPECIFICATIONS WILL APPLY TO THIS PROJECT.
13. CONCRETE SHALL BE 3,000 PSI 28 DAY STRENGTH UNLESS OTHERWISE NOTED ON THE PLANS.
14. EXISTING ROADWAYS SHALL BE KEPT FREE OF MUD, SEDIMENT, DEBRIS, ETC. AND SHALL BE CLEANED ON A REGULAR BASIS - AS A MINIMUM DAILY.
15. THE CONTRACTOR SHALL BE RESPONSIBLE TO ADHERE TO THE REQUIREMENTS OF THE ENVIRONMENTAL ASSESSMENT FOR THE NORTH RIDEOUT ROAD ENHANCED USE LEASE SITE DEVELOPMENT AT REDSTONE ARSENAL, AL DATED DECEMBER 2008.
16. SITE WORK IS CURRENTLY ONGOING AT THE SITE AND THE INFORMATION SHOWN ON SHEETS C2.0 THRU C2.3 REFLECTS THE FINISHED CONDITION OF PACKAGE 1A - MASS GRADING AND EROSION CONTROL PACKAGE (UNSECURE AREA) DATED DECEMBER 16, 2010, PACKAGE 1B - ROADWAY AND UTILITIES (UNSECURE AREA) DATED APRIL 12, 2011, PACKAGE 1B-5 - GRAVITY SANITARY SEWER DATED APRIL 12, 2011, PACKAGE 1D - RAILROAD SPUR RELOCATION /INSTALLATION DATED MAY 13, 2011, PACKAGE 1E - RIDEOUT ROAD INTERIM IMPROVEMENTS DATED JANUARY 17, 2012, PACKAGE 1F - REDSTONE GATEWAY EXTENTION, MARKET STREET, AND OVERLOOK ROAD RELOCATION (UNSECURE AREA) DATED JANUARY 27, 2012, PACKAGE 1G - LANDSCAPE, IRRIGATION, AND HARDSCAPE DATED JULY 7, 2011, AND PACKAGE 1H - WAYFINDING SIGNAGE DATED APRIL FEBRUARY 19, 2012. THE ELEVATIONS SHOWN ON THESE PLANS ARE TO FINISHED GRADE ELEVATION. THE PACKAGE I CONTRACTOR SHALL REVIEW THE PACKAGES 1A, 1B, 1B-5, 1D, 1E, 1G, 1H AND 1F PLANS AND SPECIFICATIONS TO MAKE THEMSELVES FAMILIAR WITH THE PHASING OF PACKAGES 1A, 1B, 1B-5, 1D, 1E, 1G, 1H AND 1F AND HOW IT WILL IMPACT THEIR PACKAGE I SCOPE AND SCHEDULING OF WORK. FURTHER NOTE THAT PACKAGE 1E, PACKAGE 1H, PACKAGE 1F ARE CURRENTLY UNDER CONSTRUCTION WITH BUILDING RG1200, BUILDING RG7200, AND RETAIL PROJECTS ANTICIPATED TO START DURING PACKAGE I CONSTRUCTION. PACKAGE I WORK WILL HAVE TO COORDINATE DELIVERIES AND ACCESS WITH ALL OF THE ABOVE MENTIONED PROJECTS.

SITE DEMOLITION NOTES:

1. CONTRACTOR TO COORDINATE DEMOLITION ITEMS NOTED ON THE DRAWINGS TO BE SALVAGED, RECYCLED, AND REUSED. CONTRACTOR SHALL REMOVE THE CONCRETE & STEEL ELECTRICAL POLES AND COPPER 46KV LINES (HEADED SOUTH OUT OF SUBSTATION) TO BE SALVAGED WITH EXTREME CAUTION TO PREVENT DAMAGE AND TAKE THEM TO AREA ON REDSTONE ARSENAL NOTED ON THE PLANS. REMOVAL OF THE SUBSTATION, COUNTERPOISE, FENCING ETC. IS A PART OF THE PROJECT SCOPE.
2. REFER TO SITE GRADING, DRAINAGE, AND UTILITY PLANS FOR PROPOSED UTILITY AND DRAINAGE INSTALLATION AND REMOVAL.
3. REFER TO LAYOUT, GRADING, AND UTILITY PLANS FOR ADDITIONAL INFORMATION RELATING TO PAVING, CURB, SIDEWALKS, ETC. REMOVE EXISTING CURBS AS NEEDED TO INSTALL PROPOSED IMPROVEMENTS.
4. CONTRACTOR SHALL COORDINATE WITH CITY OF HUNTSVILLE (OWNER), REDSTONE ARSENAL, LBYD, THE PROJECT MANAGER, AND THE UTILITY PROVIDER PRIOR TO THE DISCONNECTING OF ANY UTILITY SERVICE.
5. CONTRACTOR SHALL BE RESPONSIBLE FOR THE REMOVAL, RELOCATION OR PROTECTION OF ALL ABOVE AND BELOW GROUND EXISTING IMPROVEMENTS THAT ARE IN CONFLICT WITH THE PROPOSED IMPROVEMENTS UNLESS NOTED TO BE RELOCATED BY THE UTILITY SERVICE PROVIDER.
6. ALL DEMOLITION AND CONSTRUCTION DEBRIS SHALL BE RECYCLED TO THE MAXIMUM EXTENT FEASIBLE. REMAINING WASTE SHALL BECOME THE PROPERTY OF THE CONTRACTOR AND SHALL BE TRANSPORTED AND DISPOSED OF OFF-SITE AS REQUIRED IN A LEGAL MANNER WHILE KEEPING THE SITE CLEAN AND ORDERLY.
7. ALL EXISTING PAVING, CURBS, HARDSCAPE, ETC. SHALL BE SAW CUT AT THE LIMITS OF REMOVAL IN ORDER TO PROVIDE A CLEAN EDGE. EXISTING PAVING AT EDGE SHALL BE MILLED BACK A MINIMUM OF 8" TO ENSURE SMOOTH TRANSITION.
8. ALL EXISTING TREES TO REMAIN OUTSIDE OF THE CLEARING LIMITS SHALL BE PROTECTED DURING CONSTRUCTION.
9. BACKFILLING OF DEMOLISHED ITEMS SHALL BE SUITABLE FILL OR STONE PER THE PROJECT SPECIFICATIONS SUPPLEMENTAL SPECIFICATIONS EARTHWORK.
10. THE CONTRACTOR SHALL BE RESPONSIBLE FOR DEWATERING AND PUMPING AS NECESSARY FOR EROSION CONTROL FOR OWN SCOPE OF WORK.

LAYOUT NOTES:

1. CONTRACTOR SHALL VERIFY SITE BOUNDARY AND EXISTING TOPOGRAPHY. NOTIFY THE OWNER OF ANY DISCREPANCIES PRIOR TO SUBMITTING PRICES OR ORDERING MATERIALS.
2. THE OWNER WILL BE RESPONSIBLE FOR PROVIDING BENCHMARKS, CONTROLS, AND FINAL ELECTRONIC AS-BUILT DRAWINGS.
3. IT IS THE CONTRACTOR'S RESPONSIBILITY TO PROTECT ALL BENCHMARKS, PROPERTY CORNERS, AND ALDOT MONUMENTATION. ANY REPLACEMENT WILL BE AT THE CONTRACTOR'S EXPENSE.
4. THE CONTRACTOR SHALL BE RESPONSIBLE FOR ALL CONSTRUCTION STAKING AND A "RED-LINED" SET OF CLEAN CONSTRUCTION DOCUMENTS TO SERVE AS THE CONTRACTOR'S AS-BUILTS FOR OWN SCOPE OF WORK.
5. ALL DIMENSIONS AND COORDINATES SHOWN ARE TO THE BACK OF CURB OR TO THE EDGE OF SURFACING UNLESS OTHERWISE NOTED.
6. BOUNDARY AND TOPOGRAPHIC INFORMATION PROVIDED BY THE OWNER AND PERFORMED BY BUSBIN ENGINEERING.
7. TOPOGRAPHIC INFORMATION WAS PERFORMED VIA GROUND RUN AND AERIAL FORMAT AND TAKEN FROM PREVIOUS DESIGN PLANS FOR PACKAGE 1A DATED DECEMBER 16, 2010, PACKAGE 1B DATED APRIL 12, 2011, PACKAGE 1E DATED JANUARY 17, 2012, AND PACKAGE 1F DATED JANUARY 27, 2012

REDSTONE TRANSMISSION LINE NOTES:

1. THE CONTRACTOR SHALL NOTIFY REDSTONE ARSENAL, JERRY ROBINSON (256) 876-3122, AT LEAST 48 HOURS IN ADVANCE OF WORK NEAR REDSTONE TRANSMISSION LINES.
2. A CONDUCTOR TO GROUND CLEARANCE OF 24 FEET MUST BE MAINTAINED ON ALL FILLS. THE CONTRACTOR SHALL BE LIABLE FOR ANY DAMAGE TO REDSTONE PROPERTY AND/OR ELECTRICAL OUTAGES CAUSED BY THEIR WORK.
3. THE CONTRACTOR SHALL TAKE MEASURES TO ENSURE SAFETY OF THEIR WORKERS WHEN WORKING IN OR AROUND THE HIGH VOLTAGE TRANSMISSION LINES. THIS WORK SHALL BE PER STATE LAWS AND OSHA REQUIREMENTS FOR WORK NEAR ENERGIZED TRANSMISSION LINES.
4. ANY COUNTERPOISE THAT IS UNCOVERED OR DAMAGED SHALL BE REPAIRED/REBURIED IMMEDIATELY BY THE CONTRACTOR AT NO EXPENSE TO THE OWNER.
5. REDSTONE HAS THE RIGHT FOR INGRESS AND EGRESS THROUGH THE CONSTRUCTION SITE FOR MAINTENANCE ON THEIR LINES. THE CONTRACTOR SHALL WORK WITH REDSTONE TO ENSURE ACCESS TO THEIR FACILITIES.

TRAFFIC CONTROL NOTES:

1. THE CONTRACTOR SHALL ESTABLISH AND MAINTAIN TRAFFIC CONTROL DEVICES IN ACCORDANCE WITH THE LATEST EDITION AND REVISION OF PART VI OF THE FEDERAL MANUAL ON UNIFORM TRAFFIC CONTROL DEVICES (MUTCD) AND THE APPROVED TRAFFIC CONTROL PLAN FOR ALL CONSTRUCTION WITHIN WORK AREAS SHOWN AND DESCRIBED IN PART VI OF THE MUTCD.
2. ACCESS TO THE VISITOR'S CENTER SHALL BE MAINTAINED AT ALL TIMES AND SHALL MEET THE REQUIREMENTS OF REDSTONE ARSENAL.
3. TRAFFIC CONTROL AND ACCESS SHALL TAKE INTO CONSIDERATION BASE SECURITY MEASURES.
4. PERMANENT ROADWAY SIGNS OR TEMPORARY CONSTRUCTION SIGNS WHICH ARE NOT APPLICABLE OR INAPPROPRIATE FOR THE CURRENT CONDITIONS SHALL BE COVERED OR REMOVED.
5. THE DIMENSIONS SHOWN OR DESCRIBED FOR LOCATING CONSTRUCTION SIGNS ARE NOMINAL. THE ACTUAL DIMENSIONS SHALL BE ADJUSTED TO BEST FIT LOCAL CONDITIONS AND PROVIDE MAXIMUM VISIBILITY.
6. IF TRAFFIC CONTROL DEVICES ARE NECESSARY FOR PROPER WARNING AND TRAFFIC CONTROL AFTER SUNSET, THEN AS A MINIMUM, TYPE "B" WARNING LIGHTS SHALL BE PLACED ON THE FIRST WARNING SIGN AND CHANNELIZING DRUM AND TYPE "A" REFLECTIVE SHEETING SHALL BE REQUIRED ON ALL SIGNS.
7. HAZARDOUS CONDITIONS ON OPEN ROADWAYS SUCH AS PAVEMENT DROP-OFFS IN EXCESS OF 2"; CONSTRUCTION MATERIALS, VEHICLES, OR EQUIPMENT STORED OR PLACED WITHIN THE ROADWAY RIGHT-OF-WAY; AND OPEN TRENCHES ACROSS OR NEAR THE ROADWAY SHALL NOT BE ALLOWED UNLESS THE CONTRACTOR IS ON SITE AND WORKING, AND PROPER TRAFFIC CONTROL MEASURES ARE BEING TAKEN- INCLUDING BARRICADES.
8. THE CONTRACTOR SHALL KEEP OPEN ROADWAYS CLEAN AND FREE OF CONSTRUCTION DEBRIS, DIRT, LOOSE GRAVEL OR OTHER MATERIAL THAT MAY CAUSE HAZARDOUS DRIVING CONDITIONS.
9. TRAFFIC CONTROL DEVICES SHALL MEET THE STANDARD MATERIAL AND INSTALLATION REQUIREMENTS SPECIFIED IN THE CURRENT EDITION OF THE AL.D.O.T. STANDARD SPECIFICATIONS FOR HIGHWAY CONSTRUCTION.
10. ROADWAYS AND DRIVEWAYS SHALL REMAIN OPEN DURING CONSTRUCTION.
CHANNELIZING DEVICES SHALL BE PLACED AT 10' ON CENTER ALONG MINIMUM 20' RADII TO CHANNELIZE TRAFFIC INTO AND OUT OF INTERSECTING ROAD AND DRIVES WITHIN AREAS WHERE CHANNELIZING DEVICES ARE REQUIRED. TEMPORARY REGULATORY SIGNS SUCH AS STOP SIGNS AND YIELD SIGNS SHALL BE PLACED AS NECESSARY FOR PROPER TRAFFIC CONTROL IN ACCORDANCE WITH THE MUTCD.
11. CONTRACTOR SHALL UTILIZE FLAGMEN AND SIGNAGE AS NEEDED TO ASSURE SAFE ACCESS TO AND FROM THE VISITOR'S CENTER.
12. THE CONTRACTOR SHALL BE RESPONSIBLE FOR PREPARING A SITE CONSTRUCTION TRAFFIC CONTROL PLAN TO BE APPROVED BY THE CITY OF HUNTSVILLE AND REDSTONE ARSENAL PRIOR TO CONSTRUCTION. THE SITE CONSTRUCTION TRAFFIC CONTROL PLAN SHALL TAKE INTO ACCOUNT THE ENTERING AND EXITING OF CONSTRUCTION TRAFFIC ONTO THE ROADWAY AND THE IMPACT TO THE FLOW OF TRAFFIC. THIS PLAN SHALL BE IN ACCORDANCE WITH THE LATEST EDITION OF THE MUTCD. THIS SITE CONSTRUCTION TRAFFIC CONTROL PLAN SHALL BE IN ADDITION TO ANY TRAFFIC LOGISTICS PLANS PROVIDED IN THIS PLAN SET FOR ROADWAY IMPROVEMENTS.
13. CONTRACTOR SHALL PHASE TRAFFIC CONTROL PLAN AS NEEDED TO ALLOW CONTINUOUS ACCESS TO THE EXISTING VISITOR CENTER AND RAILROAD SPUR ALONG WITH THE PACKAGE 1E, 1F, 1H AND BUILDING RG7200 CONTRACTORS AS NEEDED TO PROTECT THE WORKERS AND TRAVELING PUBLIC.
14. EXISTING ROADWAYS SHALL BE KEPT FREE OF MUD, SEDIMENT, DEBRIS, ETC. AND SHALL BE CLEANED ON A REGULAR BASIS - AS A MINIMUM DAILY.

GRADING NOTES: (1)

1. THE OWNER WILL BE RESPONSIBLE FOR PROVIDING ITS COMPACTION TESTING. ADDITIONAL COMPACTION TESTING MAYBE REQUIRED AND WILL BE THE RESPONSIBILITY OF THE CONTRACTOR.
2. ALL TOPSOIL SHALL BE STRIPPED WITHIN THE PROPOSED LIMITS OF GRADING AND SHALL BE STOCKPILED ON THE REDSTONE GATEWAY IN AN APPROVED LOCATION FOR LATER USE DURING THIS PACKAGE TO RE-PLATE AREAS AS INDICATED ON THE PLANS. ALL EXCESS TOPSOIL SHALL BE HAULED OFFSITE. SEE SPECIFICATIONS FOR OFFSITE DISPOSAL AREA LOCATION.
3. SUBGRADE IN FILL AREAS SHALL BE PROOF ROLLED WITH A LOADED DUMP TRUCK AND APPROVED BY THE GEOTECHNICAL ENGINEER PRIOR TO PLACING FILL. ANY AREAS SHOWING SIGNS OF PUMPING, RUTTING, OR ANY UNSUITABLE (ORGANIC, SOFT, WET, LOOSE) MATERIAL FOUND IN PLACE SHALL BE UNDERCUT AND REPLACED, OR MOISTURE CONDITIONED AND COMPACTED TO THE SPECIFIED DENSITY AND MOISTURE CONTENT LISTED BELOW.
4. ALL EXPOSED SUBGRADE IN CUT AREAS SHALL BE SCARIFIED TO A MINIMUM DEPTH OF 12" AND RECOMPACTED TO THE SPECIFIED DENSITY AND MOISTURE CONTENT LISTED BELOW AND IN THE PROJECT SPECIFICATIONS.
5. THE PROJECT IS UNCLASSIFIED TO -12" BELOW SUBGRADE ELEVATION IN CUT AREAS.
6. THE CONTRACTOR SHALL BE RESPONSIBLE FOR RESTORING THE SUBGRADE AFTER IT HAS BEEN INITIALLY PREPPED, IF DAMAGED DUE TO INCLEMENT WEATHER OR CONSTRUCTION TRAFFIC.
7. FILL MATERIAL SHALL HAVE THE FOLLOWING PROPERTIES: VIRTUALLY FREE OF ORGANICS LESS THAN 5%, NO ROCK FRAGMENTS GREATER THAN 4" WITHIN 4' OF FINISH GRADE, LIQUID LIMIT NOT EXCEEDING 50, PLASTICITY INDEX NOT EXCEEDING 30, MINIMUM STANDARD PROCTOR (ASTM D-698) OF 100 PCF, COMPACTED TO 98% IN PAVED AREAS, PLACED IN 8" TO 10" THICK LOOSE LIFTS, AND WITHIN ±2.0% OF OPTIMUM MOISTURE CONTENT. NOTE THAT SOILS WITHIN 1' OF PAVED AREAS SHALL BE CL SOILS AND HAVE A MAXIMUM LIQUID LIMIT NOT EXCEEDING 50, AND A MAXIMUM PLASTICITY INDEX NOT EXCEEDING 30, COMPACTED TO 98% AND WITHIN ±2.0% OF OPTIMUM MOISTURE CONTENT. REFER TO SUPPLEMENTAL SPECIFICATIONS EARTHWORK FOR ADDITIONAL INFORMATION.
8. COMPACTION TESTS WILL BE TAKEN AT THE RECOMMENDATION OF THE ON-SITE GEOTECHNICAL ENGINEER, BUT AT A MINIMUM EVERY 5,000 SQUARE FEET OF AREA PER 8" LIFT IN PAVING AREAS.
9. COMPACTION WITHIN LIMITED SPACES (I.E. MANHOLES, INLETS, UTILITY TRENCHES) SHOULD BE BACKFILLED AND COMPACTED SYSTEMATICALLY, AT THE DIRECTION OF THE OWNER'S ONSITE REPRESENTATIVE. STONE BACKFILL SHALL BE INSTALLED IN 8" LOOSE LIFTS AND COMPACTED TO 95% STANDARD PROCTOR PER CITY OF HUNTSVILLE STANDARD SPECIFICATIONS SECTION 105 AND 107 AS MODIFIED IN THE SUPPLEMENT TO GENERAL REQUIREMENTS.
10. CLEARING LIMITS SHALL BE 5' OUTSIDE OF ALL PROPOSED GRADED AREAS OR NOT BEYOND THE PROPERTY LINES OR CLEARING LIMITS WHICHEVER IS LESS.
11. NO GRADING OFF-SITE OR IN ALDOT DENIED ACCESS RIGHT-OF-WAY WITHOUT PROPER APPROVALS AND PRIOR NOTIFICATION.
12. COORDINATE THE SEQUENCING OF ALL GRADING OPERATIONS WITH THE EROSION CONTROL PLAN AND OTHER ONGOING PROJECTS.
13. PROPOSED GRADES INDICATED ON THIS PLAN ARE TO FINISH GRADE. THE CONTRACTOR SHALL MAKE SUBGRADE ADJUSTMENTS FOR TOPSOIL, SIDEWALKS, ETC.
14. FILL SLOPES SHOULD BE BENCHED INTO THE EXISTING SLOPES AND SHOULD BE COORDINATED WITH THE OWNER FOR DEPTH OF BENCH INTO THE SLOPE.
15. THE FOLLOWING GEOTECHNICAL REPORTS HAVE BEEN PREPARED BY BUILDING AND EARTH SCIENCES, INC AND ARE AVAILABLE FOR INFORMATIONAL PURPOSES: PROJECT NUMBER HV11002 DATED MARCH 13, 2012 FOR THE POND LINER, PROJECT NUMBER HV10019 DATED SEPTEMBER 22, 2010 FOR THE PHASE 1A AREA, AND PROJECT NUMBER HV10019 DATED AUGUST 5, 2011 FOR PACKAGE 1F.
16. UNSUITABLE MATERIAL REFERS TO MATERIAL THAT IS NOT SUITABLE FOR PAVEMENT SUPPORT FOR REASONS ASSOCIATED WITH MATERIAL PROPERTIES, SUCH AS HIGHLY PLASTIC SOILS, "FAT" CLAYS, ORGANICS EXCEEDING 5%, AND OLD FILL. MATERIAL WHICH IS OTHERWISE SUITABLE, BUT ABOVE THE OPTIMUM MOISTURE AND REQUIRES MOISTURE CONDITIONING PRIOR TO USE AS STRUCTURAL FILL SHALL NOT BE CONSIDERED AS "UNSUITABLE". NOTE ADDITIVE AND DEDUCTIVE UNIT PRICES ARE BEING PROVIDED TO HANDLE CHANGING FIELD CONDITIONS DURING CONSTRUCTION AS NEEDED.
17. DEWATERING SHALL BE SOLELY THE RESPONSIBILITY OF THE CONTRACTOR. PREVENT SURFACE WATER AND GROUND WATER FROM ENTERING EXCAVATIONS, FROM PONDING ON PREPARED SUBGRADES, AND FROM FLOODING PROJECT SITE AND SURROUNDING AREA. PROTECT SUBGRADES FROM SOFTENING, UNDERMINING, WASHOUT, AND DAMAGE BY RAIN OR WATER ACCUMULATION. REROUTE SURFACE WATER RUNOFF AWAY FROM EXCAVATED AREAS. DO NOT ALLOW WATER TO ACCUMULATE IN EXCAVATIONS. DO NOT USE EXCAVATED TRENCHES AS TEMPORARY DRAINAGE DITCHES. INSTALL A DEWATERING SYSTEM TO KEEP SUBGRADES DRY AND CONVEY GROUND WATER AWAY FROM EXCAVATIONS. MAINTAIN UNTIL DEWATERING IS NO LONGER REQUIRED. IF GROUNDWATER DEWATERING IS REQUIRED, CONTRACTOR IS TO OBTAIN ANY PERMITS AS MAY BE REQUIRED PRIOR TO DISCHARGE OF EFFLUENT FROM DEWATERING.
18. POND LINER SHALL BE OBTAINED FROM ON-SITE SOURCE AND SHALL BE A CLAY SOIL (UNIFIED CLASSIFICATION CH) CAPABLE OF A COMPACTED PERMEABILITY RATE OF $1X10^{-6}$ CM/SEC OR LESS WITH A MAXIMUM PARTICLE SIZE OF 2" AND A MINIMUM OF 80% PASSING THE #200 SIEVE. COMPACT LINER TO A MINIMUM 98% STANDARD PROCTOR DENSITY AT 0% BELOW OPTIMUM MOISTURE CONTENT TO 4% ABOVE OPTIMUM MOISTURE CONTENT. THE IN-PLACE HYDRAULIC CONDUCTIVITY OF THE POND LINER WILL BE EVALUATED BY ASTM D3385-09 "STANDARD TEST METHOD FOR INFILTRATION RATE OF SOILS IN FIELD USING DOUBLE-RING INFILTROMETER" OR ASTM D5093-02 (2008) "STANDARD TEST METHOD FOR FIELD MEASUREMENT OF INFILTRATION RATE USING DOUBLE-RING INFILTROMETER WITH SEALED-INNER RING." A TESTING RATE OF ONE TEST PER 10,000 SF (EACH LIFT) OF IN-PLACE LINER WILL BE TAKEN AND CORRELATED WITH LABORATORY PERMEABILITY TESTS TO EVALUATE THE INFILTRATION RATE OF THE IN-PLACE LINER.
19. CONTAMINATED SOILS MAY BE ENCOUNTERED WITHIN THE EXISTING SUBSTATION DEMOLITION LIMITS. CONTAMINATED SOILS ARE TO BE EXCAVATED. REDSTONE ARSENAL SHALL BE CONTACTED PRIOR TO ANY EXCAVATION AND A REDSTONE ARSENAL REPRESENTATIVE IS TO BE PRESENT DURING EXCAVATION OF SOIL. THE REDSTONE ARSENAL REPRESENTATIVE SHALL DETERMINE WHICH SOIL SAMPLES ARE TO BE TAKEN AND TESTED. REDSTONE ARSENAL WILL RETURN THE TEST RESULTS WITHIN 24 HOURS. THE EXTENTS OF CONTAMINATED SOIL EXCAVATION WILL BE DETERMINED BY THE RESTONE ARESENAL REPRESENTATIVE AND THE GEOTECHNICAL ENGINEER.

(1)

PROJECT CONTROL POINTS (NE)

NAME	GRID NORTH	GRID EAST	ELEVATION	DESCRIPTION	LOCATION
AHD-16	1,530,461.19	404,038.30	655.94	ALDOT HIGHWAY MONUMENT NO. 17	I-565 R.O.W. 275' WEST OF CL RIDEOUT ROAD
AHD-17	1,530,739.43	403,720.37	662.68	ALDOT HIGHWAY MONUMENT NO. 16	I-565 R.O.W. 600' WEST OF CL RIDEOUT ROAD
TP-1	1,528,778.40	404,155.65	638.64	MAG NAIL & GALVANIZED SHINER	177' NORTH OF CL GOSS ROAD & 113' WEST OF CL RIDEOUT ROAD
TP-2	1,529,198.25	404,178.52	640.82	MAG NAIL & GALVANIZED SHINER	600' NORTH OF CL GOSS ROAD & 113' WEST OF CL RIDEOUT ROAD

ALABAMA EAST ZONE
CONTROL: GTAC, PID DG5771
NAV (83) CORS - 34°42'39.82619(N) - 086°39'12.28546(W)
NAVD 88, USING 731.8 AS ELEVATION

STORM DRAINAGE NOTES:

1. THE CONTRACTOR SHALL SUBMIT SHOP DRAWINGS ON ALL STORM PIPE MATERIALS TO THE OWNER AND RECEIVE APPROVAL PRIOR TO INSTALLATION AND/OR FABRICATION.
2. ALL PROPOSED STORM INLETS (GRATES, CURB, YARD, AREA DRAINS) ARE TO BE LOCATED AT THE LOW POINTS. GRADING SHALL BE TO DIRECT RUNOFF TO THESE INLETS. NOTIFY THE OWNER OF ANY DISCREPANCIES.
3. STORM DRAINAGE SYSTEMS SHALL BE CONSTRUCTED FROM DOWNSTREAM TO UPSTREAM. VERIFY ALL PIPE SLOPES, INVERTS, AND POINTS OF CONNECTION PRIOR TO CONSTRUCTION. NOTIFY THE OWNER OF ANY DISCREPANCIES.
4. THE CONTRACTOR SHALL VERIFY ALL EXISTING AND PROPOSED STORM PIPE GRADES AND POINTS OF CONNECTION PRIOR TO INSTALLATION. THE OWNER SHALL BE NOTIFIED OF ANY DEVIATIONS PRIOR TO OR DURING CONSTRUCTION.
5. PROPOSED STORM PIPES SHALL BE BEDDED IN 4" OF CRUSHED AGGREGATE PER CITY OF HUNTSVILLE DR-166. STORM PIPES LOCATED IN PAVED AREAS AND 5' BEYOND THE BACK OF CURB SHALL BE BACKFILLED WITH #78 STONE UP TO SUBGRADE ELEVATION PER CITY OF HUNTSVILLE DR-166.
6. ALL RIP RAP SHALL BE CLASS 2 PER THE ALABAMA DEPT. OF TRANSPORTATION (ALDOT) STANDARD SPECIFICATIONS UNLESS OTHERWISE NOTED.
7. ALL STORM PIPES 18" AND GREATER SHALL BE CLASS 3 REINFORCED CONCRETE PIPE (RCP) PER CITY OF HUNTSVILLE STANDARD SPECIFICATIONS SECTION 527 AS MODIFIED IN THE SUPPLEMENT TO GENERAL REQUIREMENTS.
8. ALL STORM MANHOLES SHALL BE APPROVED CONE, RISER, AND BASE SECTIONS WITH GASKETED JOINTS MEETING ALDOT SPECIAL DRAWING # MH-621-2 WITH CITY OF HUNTSVILLE RING AND COVER PER DR-129.
9. ALL SLOPE PAVED HEADWALLS SHALL BE PER CITY OF HUNTSVILLE DR-152A THROUGH DR-152D.
10. CONCRETE BOX CULVERTS SHALL BE EITHER PRE-CAST OR CAST-IN-PLACE TYPE CONSTRUCTION. PRE-CAST BOX CULVERTS SHALL BE DESIGNED TO MEET AASHTO HS-20 LOADING REQUIREMENTS, AASHTO M273 (C850), AASHTO M259 (C789), ASTM C1433, AND THE CITY OF HUNTSVILLE STANDARD SPECIFICATIONS SECTION 523 FOR CONSTRUCTION OF PUBLIC IMPROVEMENTS AS MODIFIED IN THE SUPPLEMENT TO GENERAL REQUIREMENTS. CAST-IN-PLACE BOX CULVERTS SHALL BE PER THE ALDOT SPECIAL DRAWINGS PROVIDED MEETING AASHTO HS-20 LOADING CONDITIONS AND THE CITY OF HUNTSVILLE STANDARD SPECIFICATIONS SECTION 523 FOR CONSTRUCTION OF PUBLIC IMPROVEMENTS AS MODIFIED IN THE SUPPLEMENT TO GENERAL REQUIREMENTS.
11. ALL YARD INLETS SHALL BE PRECAST INLET BOXES 3-1" x 3-1" OR 4'-2" x 4'-2" DEPENDING ON MAXIMUM PIPE DEFLECTIONS. YARD INLET TOP TO BE PRECAST WITH A RING AND COVER ACCESS PROVIDED THROUGH THE TOP.
12. CONTRACTOR TO PROVIDE "RED-LINED" AS-BUILT DRAWINGS ON STORM PIPING AND STORMWATER DETENTION.

EROSION CONTROL NOTES:

1. EXISTING EROSION CONTROL MEASURES INSTALLED IN PACKAGE 1B AND 1F. CONTRACTOR WILL BE RESPONSIBLE FOR MAINTAINING THESE MEASURES LOCATED WITHIN THEIR WORK AREA ONLY.
2. ANY TEMPORARY ACCESS ROADS SHALL BE THE RESPONSIBILITY OF THE CONTRACTOR RELATED TO THEIR OWN SCOPE OF WORK.
3. SITE EROSION CONTROL MEASURES SHALL BE IN ACCORDANCE WITH ALL FEDERAL, STATE, AND LOCAL LAWS, CODES, AND REGULATIONS.
4. LW REDSTONE, LLC HAS OBTAINED A "NOTICE OF REGISTRATION"(NOR) FROM ADEM #ALR107934 (EXPIRES 3/31/2016). THE OWNER SHALL BE RESPONSIBLE FOR ALL ADEM REQUIRED MONITORING, INSPECTIONS, ETC. TO ENSURE THAT THE SITE IS AT ALL TIMES IN ACCORDANCE WITH ADEM RULES & REGULATIONS. DAILY DOCUMENTATION OF INSPECTIONS BY A Q.C.I. OR Q.C.P. SHALL BE THE RESPONSIBILITY OF THE CONTRACTOR AND MAINTAINED BY THE CONTRACTOR ON-SITE AND PROVIDED TO THE OWNER UPON REQUEST. ANY AND ALL FEES, FINES, ETC., SHALL BE THE RESPONSIBILITY OF THE CONTRACTOR.
5. ALL EROSION CONTROL DEVICES SHALL BE PROPERLY MAINTAINED DURING THE CONSTRUCTION PROCESS AND UNTIL ALL DISTURBED AREAS HAVE BEEN PERMANENTLY STABILIZED. ALL EROSION CONTROL INSTALLATION AND MAINTENANCE SHALL BE SOLELY THE RESPONSIBILITY OF THE CONTRACTOR AND SHALL BE AT NO ADDITIONAL COST TO THE OWNER
6. EROSION CONTROL DEVICES SHOWN ON THESE PLANS ARE A MINIMUM. ADDITIONAL DEVICES SHALL BE INSTALLED AS REQUIRED TO PREVENT SILTATION, EROSION AND OTHER DEGRADATION OR POLLUTION TO THE SITE OR ADJACENT PROPERTIES, STREAMS, DITCHES, AND PUBLIC ROADWAYS.
7. EROSION CONTROL DEVICES SHALL INCLUDE, BUT NOT LIMITED TO, THE FOLLOWING DEVICES: SILT FENCING, BRUSH BERMS, SEDIMENT BASINS, DETENTION PONDS, STRAW WATTLES, CHECK DAMS, FILTER BERMS, JUTE MATTING, VEGETATIVE FILTER STRIPS, TURF REINFORCEMENT MAT, DIVERSION BERMS, POLYACRYLAMIDE, FLOC BLOCKS, ETC.
8. THE CONTRACTOR SHALL BE RESPONSIBLE FOR MAINTAINING ALL EROSION CONTROL DEVICES IN GOOD OPERATING CONDITION DURING ALL LAND DISTURBING ACTIVITIES. THIS RESPONSIBILITY SHALL INCLUDE THE CLEANUP AND/OR REPAIRS TO THE DEVICES AT NO ADDITIONAL COST TO THE OWNER.
9. EROSION CONTROL DEVICES SHALL BE MONITORED AND MAINTAINED UNTIL THE SITE HAS BEEN PERMANENTLY STABILIZED AND AFTER EACH RAINFALL GREATER THAN 0.5 INCHES IN A 24 HOUR PERIOD, ANY WIND GUSTS GREATER THAN 25 MPH, AND ANY SUSTAINED WINDS GREATER THAN 20 MPH IN A 24 HOUR PERIOD.
10. AFTER ALL LAND DISTURBANCE ACTIVITIES HAVE CEASED AND AFTER ALL DISTURBED AREAS HAVE BEEN PERMANENTLY STABILIZED, THE EROSION CONTROL DEVICES SHALL BE REMOVED BY THE CONTRACTOR AND THE AREA CLEANED AND DRESSED FOR EACH CONTRACTOR'S WORK AREA. CONTRACTOR SHALL INSTALL, MAINTAIN, AND REMOVE ANY EROSION CONTROL MEASURES UNTIL AREA IS STABILIZED IN WORK AREA BY CONTRACTOR THAT INSTALLED THE EROSION CONTROL MEASURE.
11. DEWATERING SHALL BE THE RESPONSIBILITY OF THE CONTRACTOR FOR THEIR SCOPE OF WORK. DEWATERING OPERATIONS MAY NOT BE DISCHARGED IN A MANNER THAT CAUSES EROSION OF THE SITE OR POLLUTION TO ADJACENT PROPERTIES, STREAMS, DITCHES, OR PUBLIC ROADWAYS.
12. ALL LAND DISTURBANCE ACTIVITIES SHALL BE CONDUCTED IN A LOGICAL SEQUENCE TO MINIMIZE THE EXPOSURE OF BARE AREAS AT ANY ONE TIME.
13. ALL DISTURBED AREAS LEFT INACTIVE FOR MORE THAN 13 DAYS SHALL BE SEEDED AND MULCHED IN ACCORDANCE WITH ALDOT SPECIFICATIONS SECTION 652 AND 656 AND CITY OF HUNTSVILLE STANDARD SPECIFICATIONS SECTION 653 AND 659. COORDINATE PERMANENT GRASSING WITH LANDSCAPE PLAN.
14. ALL DITCHES AND FILL/CUT SIDE SLOPES SHALL RECEIVE ALDOT SEED AND MULCH PER NOTE #13 ABOVE. COORDINATE WITH LANDSCAPE PLANS FOR SOD AREAS. ALL FLAT/PAD AREAS SHALL RECEIVE WILDFLOWER MIX PER THE PROJECT SPECIFICATIONS - SUPPLEMENTAL SPECIFICATIONS LANDSCAPE, 2.4 F.
15. ALL GRADED AREAS SHALL RECEIVE A MINIMUM OF 4 INCHES OF TOPSOIL AND PERMANENT GRASSING UNLESS OTHERWISE INDICATED. PLANTING BEDS SHALL RECEIVE A MINIMUM OF 6" OF TOPSOIL.
16. PRIOR TO SITE CLEARING, ALL PERIMETER SILT FENCING, BRUSH BERMS, ETC. AND GRAVELED ACCESS DRIVES SHALL BE INSTALLED. THE OWNER WILL INSPECT AND APPROVE THE INSTALLATION OF THESE MEASURES PRIOR TO RELEASING SITE WORK CONSTRUCTION.
17. ALL EXISTING STREAMS, DITCHES, ETC. SHALL BE PROTECTED FROM SEDIMENTS AND SILTS BY SILT FENCING, WATTLES, BRUSH BERMS, ETC.
18. WATTLES OR SILT FENCING SHALL BE INSTALLED AT ALL INLETS UPON THE COMPLETION OF EACH INLET AS INSTALLED.
19. RIP RAP SHALL BE PLACED AT EACH HEADWALL IMMEDIATELY FOLLOWING CONSTRUCTION OF EACH HEADWALL.
20. GEOTEXTILE SHALL BE PLACED ON ALL 2:1 SIDE SLOPES. GEOTEXTILE SHALL BE NORTH AMERICAN GREEN SC150 OR APPROVED EQUAL UNLESS OTHERWISE NOTED ON PLANS. ALL GEOTEXTILES SHALL BE INSTALLED PER THE MANUFACTURER'S RECOMMENDATIONS.
21. GEOTEXTILE SHALL BE PLACED ON ALL 3:1 SIDE SLOPES. GEOTEXTILE SHALL BE NORTH AMERICAN GREEN S150 OR APPROVED EQUAL UNLESS OTHERWISE NOTED ON PLANS. ALL GEOTEXTILES SHALL BE INSTALLED PER THE MANUFACTURER'S RECOMMENDATIONS.
22. GEOTEXTILE SHALL BE PLACED ON ALL DITCH BOTTOMS & TO THE TOP OF SLOPE ON EACH SIDE. GEOTEXTILE SHALL BE NORTH AMERICAN GREEN SC150 OR APPROVED EQUAL UNLESS OTHERWISE NOTED ON PLANS. ALL GEOTEXTILES SHALL BE INSTALLED PER THE MANUFACTURER'S RECOMMENDATIONS.
23. GEOTEXTILE IS NOT REQUIRED ON 4:1 AND FLATTER SLOPES.

UTILITY NOTES:

1. CONTRACTOR TO COORDINATE WITH OWNER PRIOR TO ANY UTILITY BEING DEMOLISHED REGARDING ITEMS TO BE SALVAGED, RECYCLED, AND REUSED. CONTRACTOR SHALL REMOVE ITEMS TO BE SALVAGED WITH EXTREME CAUTION TO PREVENT DAMAGE. CONTRACTOR SHALL TURN ALL SALVAGED UTILITY ITEMS OVER TO OWNER.
2. THE CONTRACTOR SHALL SUBMIT SHOP DRAWINGS ON ALL UTILITY INFRASTRUCTURE MATERIALS TO THE OWNER AND RECEIVE APPROVAL PRIOR TO INSTALLATION AND/OR FABRICATION.
3. UTILITY TRENCHES SHALL BE BACKFILLED WITH COMPACTED FILL PLACED IN 8" LOOSE LIFTS. FILL SHALL BE COMPACTED TO 95% STANDARD PROCTOR AND OPTIMUM MOISTURE CONTENT WITHIN ±2.0% PER CITY OF HUNTSVILLE STANDARD SPECIFICATIONS SECTION 105 AND 107 AS MODIFIED IN THE SUPPLEMENT TO GENERAL REQUIREMENTS.
4. WHEN INSTALLING UTILITIES IN EXISTING PAVED AREAS, ROADWAYS, OR IN AREAS WHERE SOILS ARE CONSIDERED UNSUITABLE FOR BEDDING OR BACKFILLING, UTILITY TRENCHES SHALL BE BACKFILLED FULL DEPTH WITH #78 STONE PER CITY OF HUNTSVILLE DR-166.
5. REFER TO HUNTSVILLE UTILITIES WATER DEPARTMENT FACILITIES SPECIFICATIONS DATED 2008 FOR ALL WATER SYSTEMS. HUNTSVILLE UTILITIES WATER MAIN SHALL HAVE HUNTSVILLE UTILITIES MARKER TAPE INSTALLED 2' ABOVE THE PIPE AND THE REDSTONE ARSENAL WATER MAIN RELOCATION SHALL HAVE REDSTONE MARKER TAPE INSTALLED 2' ABOVE THE PIPE. THESE WATER MAINS SHALL HAVE A MINIMUM OF 5' C.T.C. SEPARATION.
6. REFER TO HUNTSVILLE UTILITIES ELECTRICAL DEPARTMENT GENERAL SPECIFICATIONS FOR INSTALLATION OF UNDERGROUND UTILITIES DATED OCTOBER 2008 FOR ALL ELECTRICAL SYSTEMS.
7. THE CONTRACTOR WILL BE REQUIRED TO COORDINATE WITH HUNTSVILLE UTILITIES ON THE GAS INSTALLATION WORK AND SCHEDULE ALONG REDSTONE GATEWAY.
8. THE CONTRACTOR SHALL CONTACT TRENT HALL WITH HUNTSVILLE UTILITIES POWER AT (256) 535-1306 OR (256) 652-8620 24 HOURS PRIOR TO THE CONSTRUCTION OF THE ELECTRICAL PRIMARY TO SET UP AN ON-SITE JOB MEETING. STREET LIGHT INFRASTRUCTURE WILL BE INSPECTED BY THE OWNER'S PROJECT MANAGER.

UTILITY CONTACTS:

REDSTONE ARSENAL

DIRECTORATE OF PUBLIC WORKS - POWER
CONTACT: JERRY ROBINSON
PH: 256-876-3122
EMAIL: JERRY.W.ROBINSON@US.ARMY.MIL

DIRECTORATE OF PUBLIC WORKS - TRAFFIC & DRAINAGE
CONTACT: TOM RICHARDSON
PH: 256-876-7008
EMAIL: TOM.RICHARDSON1@US.ARMY.MIL

NEC - COMMUNICATIONS
CONTACT: DAVID RUSSELL
PH: 256-876-5030
EMAIL: DAVID.RUSSELL@US.ARMY.MIL
CONTACT: JERRY HYATT
PH: 256-876-2766
EMAIL: JERRY.HYATT@US.ARMY.MIL
CONTACT: GARY SHELTON
PH: 256-876-5150
EMAIL: DONALD.SHELTON@US.ARMY.MIL

ENVIRONMENTAL
CONTACT: CRAIG NORTHRIDGE
PH: 256-955-8504
EMAIL: CRAIG.NORTHRIDGE@US.ARMY.MIL

PHONE COMPANIES

CENTURY LINK
CONTACT: ANDY WATWOOD, SR.
PH: 256-704-1026
EMAIL: ANDY.WATWOOD@CENTURYLINK.COM

KNOLOGY
CONTACT: STAN HODGES
PH: 256-489-6420
EMAIL: STAN.HODGES@KNOLOGY.COM

AT&T
CONTACT: DEBORA GREGG
PH: 256-651-5521
EMAIL: DG5927@ATT.COM

HUNTSVILLE UTILITIES

POWER
CONTACT: MIKE COUNTS
PH: 256-535-1314
EMAIL: MIKE.COUNTS@HSVUTIL.ORG
CONTACT: RICHARD KNOX
PH: 256-535-1282
EMAIL: RKNOX@HSVUTIL.ORG

GAS
CONTACT: JOEL PERRY
PH: 256-535-1445
EMAIL: JOEL.PERRY@HSVUTIL.ORG

WATER
CONTACT: JUSTIN YORK
PH: 256-535-1403
EMAIL: JUSTIN.YORK@HSVUTIL.ORG

LBYD
Civil and Structural Engineers
Birmingham, Alabama
Atlanta, Georgia
Huntsville, Alabama
Tampa Bay, Florida
www.lbyd.com

LBYD Project Number 302-10-002A

LBYD, Inc.
305 Church Street SW
Suite 719
Huntsville, AL 35801
Phone (256) 533-1575
Fax (256) 533-1744

© copyright 2011
These drawings and design intent are the sole property of City of Huntsville which may not be reproduced without written permission.

ALABAMA REGISTERED No. 26754 PROFESSIONAL ENGINEER TIMOTHY A. ROBERTS
1/21/2013

HUNTSVILLE
The Star of Alabama

PROJECT GENERAL NOTES
REDSTONE GATEWAY - PACKAGE I
LAKE F
CITY OF HUNTSVILLE
HUNTSVILLE, ALABAMA

REV	DATE	DRAWN	CHECKED	DESCRIPTION
1	1/21/13	AES	RAN	PKG I -1 COMMENTS

TRAFFIC | REAL ESTATE | PE | DRAINAGE
COH REVIEW

DRAWN: TBE
CHECKED: RAN
DATE: August 10, 2012

C1.0-R1

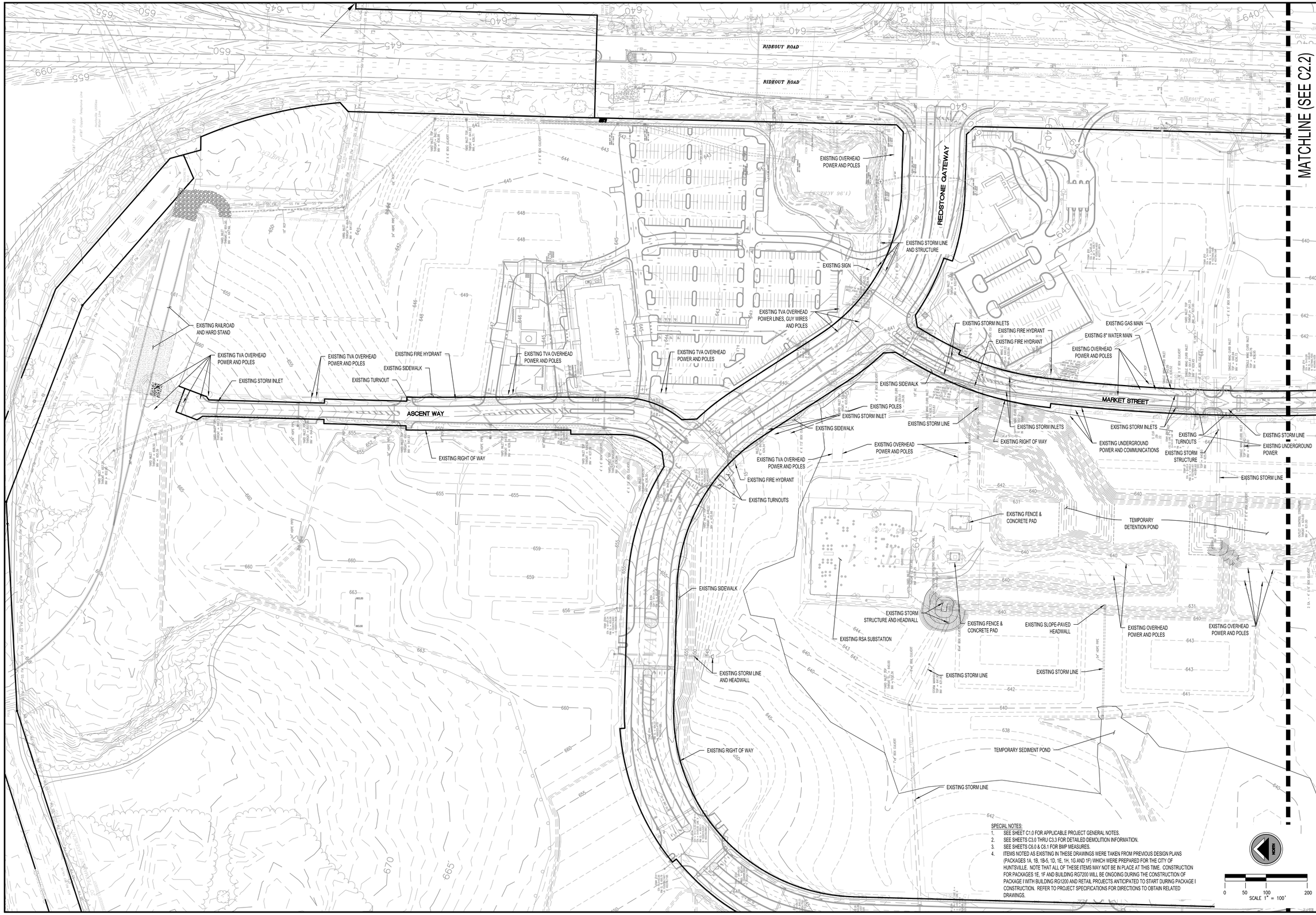

SPECIAL NOTES:

1. SEE SHEET C1.0 FOR APPLICABLE PROJECT GENERAL NOTES.
2. SEE SHEETS C3.0 THRU C3.3 FOR DETAILED DEMOLITION INFORMATION.
3. SEE SHEETS C6.0 & C6.1 FOR BMP MEASURES.
4. ITEMS NOTED AS EXISTING IN THESE DRAWINGS WERE TAKEN FROM PREVIOUS DESIGN PLANS (PACKAGES 1A, 1B, 1B-5, 1D, 1E, 1H, 1G AND 1F) WHICH WERE PREPARED FOR THE CITY OF HUNTSVILLE. NOTE THAT ALL OF THESE ITEMS MAY NOT BE IN PLACE AT THIS TIME. CONSTRUCTION FOR PACKAGES 1E, 1F AND BUILDING RG7200 WILL BE ONGOING DURING THE CONSTRUCTION OF PACKAGE I WITH BUILDING RG1200 AND RETAIL PROJECTS ANTICIPATED TO START DURING PACKAGE I CONSTRUCTION. REFER TO PROJECT SPECIFICATIONS FOR DIRECTIONS TO OBTAIN RELATED DRAWINGS.

LBYD
Civil and Structural Engineers
Birmingham, Alabama
Atlanta, Georgia
Huntsville, Alabama
Tampa Bay, Florida
www.lbyd.com

LBYD Project Number
302-10-002A

LBYD, Inc.
305 Church Street SW
Suite 719
Huntsville, AL 35801
Phone (256) 533-1575
Fax (256) 533-1744

© copyright 2011
These drawings and design intent are the sole property of City of Huntsville which may not be reproduced without written permission.

ALABAMA REGISTERED No. 26754 PROFESSIONAL ENGINEER
8/10/2012

HUNTSVILLE
The Star of Alabama

EXISTING CONDITIONS PLAN
REDSTONE GATEWAY - PACKAGE I
LAKE F
CITY OF HUNTSVILLE
HUNTSVILLE, ALABAMA

REV	DATE	DRAWN	CHECKED	DESCRIPTION	DATE	TRAFFIC	REAL ESTATE	PK	DRAINAGE

DRAWN: TBE
CHECKED: RAN
DATE: August 10, 2012

C2.1

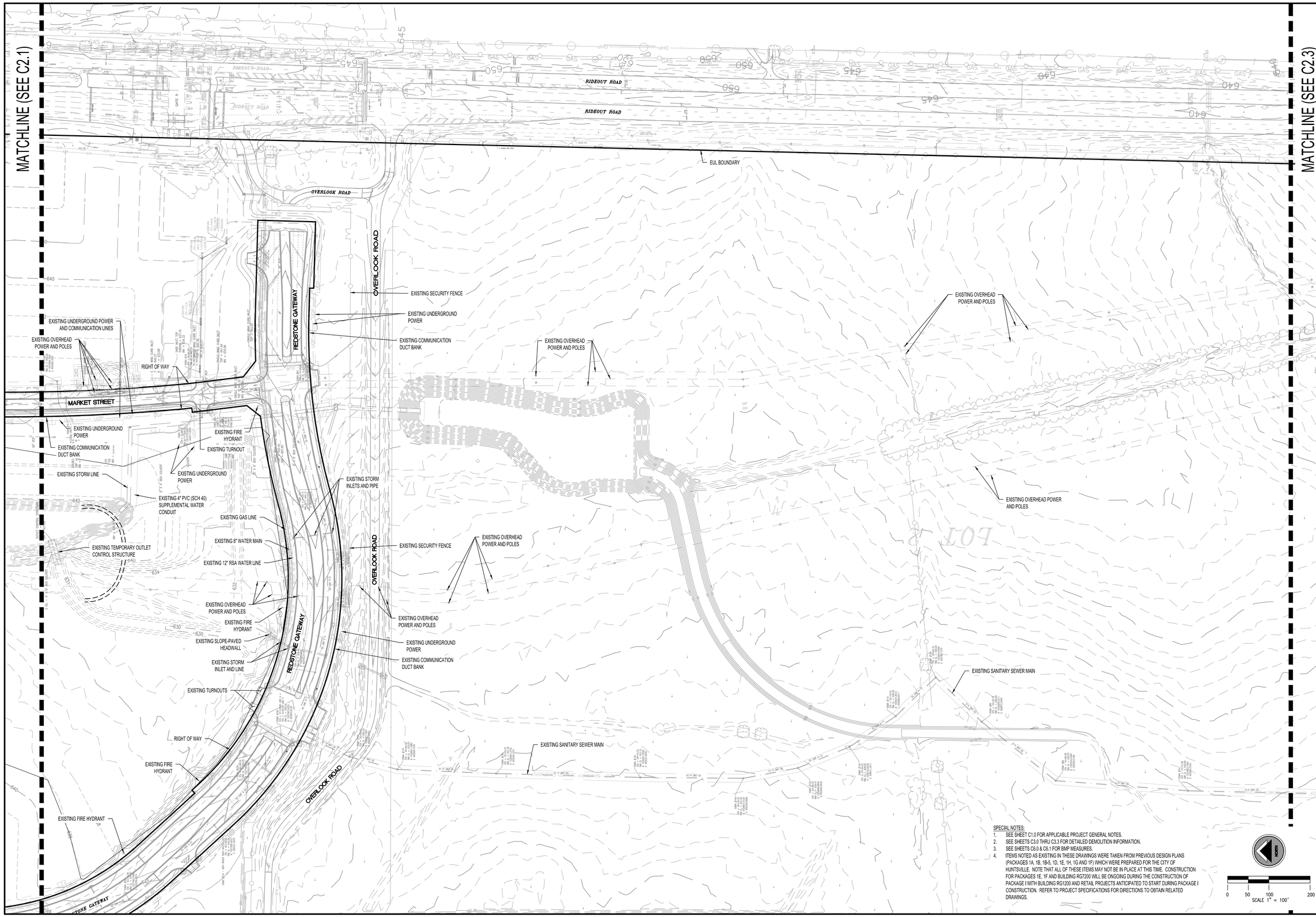

SPECIAL NOTES:

1. SEE SHEET C1.0 FOR APPLICABLE PROJECT GENERAL NOTES.
2. SEE SHEETS C3.0 THRU C3.3 FOR DETAILED DEMOLITION INFORMATION.
3. SEE SHEETS C6.0 & C6.1 FOR BMP MEASURES.
4. ITEMS NOTED AS EXISTING IN THESE DRAWINGS WERE TAKEN FROM PREVIOUS DESIGN PLANS (PACKAGES 1A, 1B, 1B-5, 1D, 1E, 1H, 1G AND 1F) WHICH WERE PREPARED FOR THE CITY OF HUNTSVILLE. NOTE THAT ALL OF THESE ITEMS MAY NOT BE IN PLACE AT THIS TIME. CONSTRUCTION FOR PACKAGES 1E, 1F AND BUILDING RG7200 WILL SE ONGOING DURING THE CONSTRUCTION OF PACKAGE I WITH BUILDING RG1200 AND RETAIL PROJECTS ANTICIPATED TO START DURING PACKAGE I CONSTRUCTION. REFER TO PROJECT SPECIFICATIONS FOR DIRECTIONS TO OBTAIN RELATED DRAWINGS.

LBYD
Civil and Structural Engineers
Birmingham, Alabama
Atlanta, Georgia
Huntsville, Alabama
Tampa Bay, Florida
www.lbyd.com

LBYD Project Number
302-10-002A

LBYD, Inc.
305 Church Street SW
Suite 719
Huntsville, AL 35801
Phone (256) 533-1575
Fax (256) 533-1744

© copyright 2011
These drawings and design intent are the sole property of City of Huntsville which may not be reproduced without written permission.

ALABAMA REGISTERED No. 26754 PROFESSIONAL ENGINEER
8/10/2012

HUNTSVILLE
The Star of Alabama

EXISTING CONDITIONS PLAN

REDSTONE GATEWAY - PACKAGE I
LAKE F
CITY OF HUNTSVILLE
HUNTSVILLE, ALABAMA

REV	DATE	DRAWN	CHECKED	DESCRIPTION	DATE	TRAFFIC	REAL ESTATE	PE	DRAINAGE

DRAWN: TBE
CHECKED: RAN
DATE: August 10, 2012
CITY REVIEW

C2.2

SPECIAL NOTES:

1. SEE SHEET C1.0 FOR APPLICABLE PROJECT GENERAL NOTES.
2. SEE SHEETS C3.0 THRU C3.3 FOR DETAILED DEMOLITION INFORMATION.
3. SEE SHEETS C6.0 & C6.1 FOR BMP MEASURES.
4. ITEMS NOTED AS EXISTING IN THESE DRAWINGS WERE TAKEN FROM PREVIOUS DESIGN PLANS (PACKAGES 1A, 1B, 1B-5, 1D, 1E, 1H , 1G AND 1F) WHICH WERE PREPARED FOR THE CITY OF HUNTSVILLE. NOTE THAT ALL OF THESE ITEMS MAY NOT BE IN PLACE AT THIS TIME. CONSTRUCTION FOR PACKAGES 1E, 1F AND BUILDING RG7200 WILL BE ONGOING DURING THE CONSTRUCTION OF PACKAGE I WITH BUILDING RG1200 AND RETAIL PROJECTS ANTICIPATED TO START DURING PACKAGE I CONSTRUCTION. REFER TO PROJECT SPECIFICATIONS FOR DIRECTIONS TO OBTAIN RELATED DRAWINGS.

LBYD
Civil and Structural Engineers
Birmingham, Alabama
Atlanta, Georgia
Huntsville, Alabama
Tampa Bay, Florida
www.lbyd.com

LBYD Project Number
302-10-002A

LBYD, Inc.
305 Church Street SW
Suite 719
Huntsville, AL 35801
Phone (256) 533-1575
Fax (256) 533-1744

© copyright 2011
These drawings and design intent are the sole property of City of Huntsville which may not be reproduced without written permission.

ALABAMA REGISTERED No. 26754 PROFESSIONAL ENGINEER
8/10/2012

HUNTSVILLE
The Star of Alabama

EXISTING CONDITIONS PLAN

REDSTONE GATEWAY - PACKAGE I

LAKE F
CITY OF HUNTSVILLE
HUNTSVILLE, ALABAMA

REV	DATE	DRAWN	CHECKED	DESCRIPTION	TRAFFIC	REAL ESTATE	PE	DRAINAGE

DRAWN: TBE
CHECKED: RAN
DATE: August 10, 2012

C2.3

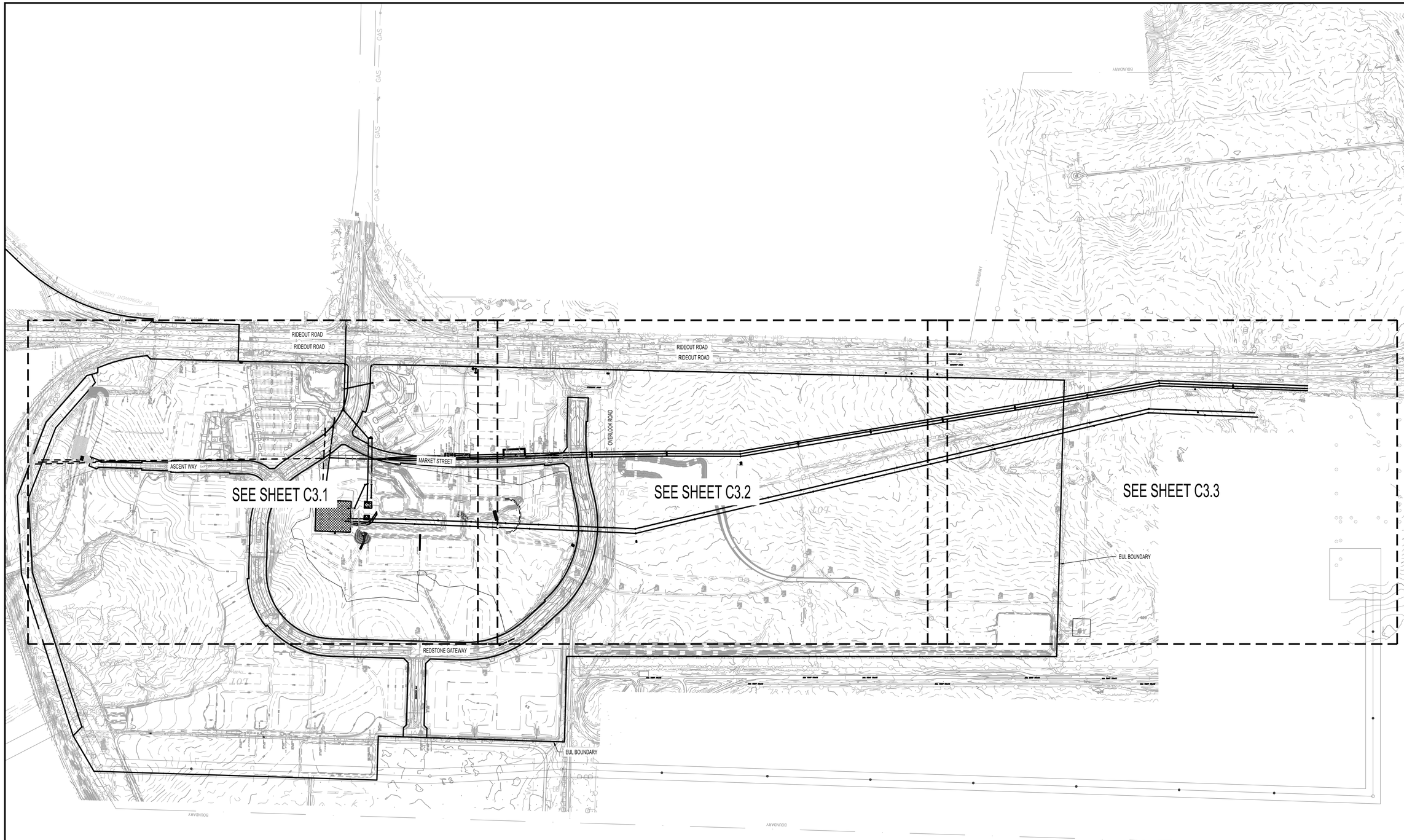

SPECIAL NOTES:

1. SEE SHEET C1.0 FOR APPLICABLE PROJECT GENERAL NOTES.
2. SEE SHEETS C2.0 THRU C2.3 FOR EXISTING CONDITIONS.
3. ITEMS NOT NOTED TO BE REMOVED SHALL REMAIN.
4. SEE SHEET C4.0 FOR ADDITIONAL DETAILED UTILITY REMOVAL AND RELOCATION INFORMATION.
5. ALL EXISTING SANITARY SEWER TO REMAIN.
6. CONTRACTOR SHALL CLEAR AND GRUB AS NECESSARY TO INSTALL PROPOSED IMPROVEMENTS.
7. SOILS SAMPLES FROM THE CONTAMINATED SOIL PIT WILL BE TESTED BY RSA TO ENSURE CONTAMINATED SOIL HAS BEEN REMOVED.
8. ALL SUBSTATION COMPONENTS TO BE REMOVED BY CONTRACTOR.
9. CONTRACTOR TO REMOVE AND DISPOSE OF ALL COUNTERPOISE ENCOUNTERED WITHIN THE SUBSTATION LIMITS.
10. METAL & CONCRETE POLES AND COPPER 46KV LINES (HEADED SOUTH OUT OF SUBSTATION) TO BE SALVAGED AND TAKEN TO THE REDSTONE ARSENAL HIGH VOLTAGE SHOP, CLOSE TO BUILDING 3542. THE SHOP IS APPROXIMATELY 2.5 MILES FROM THE SITE. COORDINATE WITH REDSTONE ARSENAL. EACH REEL OF WIRE TO CONTAIN A MAXIMUM OF 3,000 LF OR 2,000 LBS.
11. ALL WOODEN POLES TO BE DISPOSED OF AT CONTRACTOR'S DISCRETION.
12. ALL HDPE PIPE TO BE RETAINED BY THE CITY.

LEGEND:

- EXISTING UTILITY POLE (TO BE REMOVED)
- EXISTING IMPROVEMENTS (TO BE REMOVED)
- EXISTING PAVING, CURBS, AND HARDSCAPE (TO BE REMOVED)
- EXISTING UTILITIES AND FENCING (TO BE REMOVED)

NORTH

0 150 300 600
SCALE 1" = 300'

LBYD
Civil and Structural Engineers
Birmingham, Alabama
Atlanta, Georgia
Huntsville, Alabama
Tampa Bay, Florida
www.lbyd.com

LBYD Project Number
302-10-002A

LBYD, Inc.
305 Church Street SW
Suite 719
Huntsville, AL 35801
Phone (256) 533-1575
Fax (256) 533-1744

© copyright 2011
These drawings and design intent are the sole property of City of Huntsville which may not be reproduced without written permission.

ALABAMA REGISTERED No. 26754 PROFESSIONAL ENGINEER
8/10/2012

HUNTSVILLE
The Star of Alabama

OVERALL DEMOLITION PLAN
REDSTONE GATEWAY - PACKAGE I
LAKE F
CITY OF HUNTSVILLE
HUNTSVILLE, ALABAMA

REV	DATE	DESCRIPTION	TRAFFIC	REAL ESTATE	PC	DRAINAGE

DRAWN: TBE
DATE: August 10, 2012
DRAWN: RAN
CHECKED:

C3.0

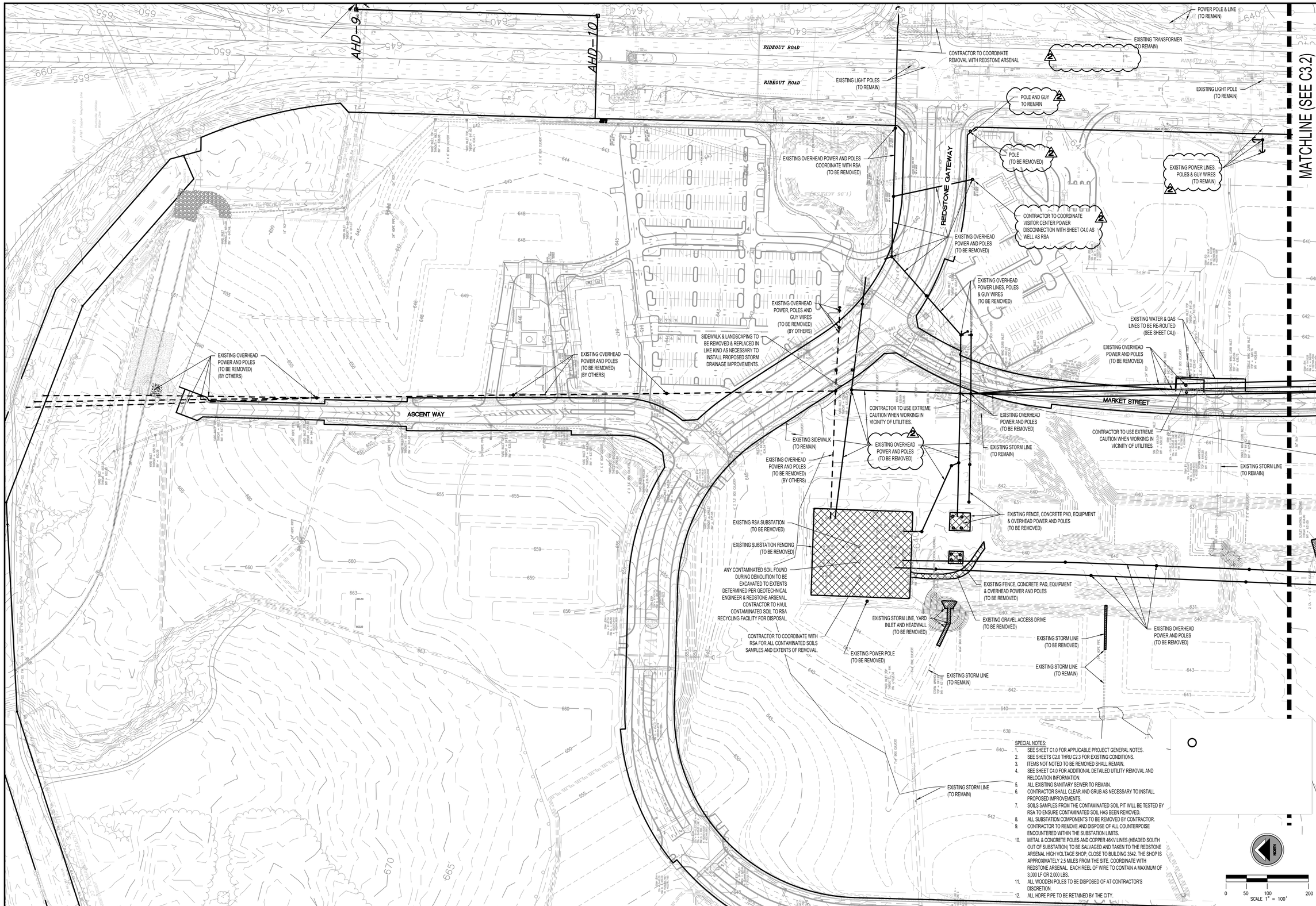

SPECIAL NOTES:

1. SEE SHEET C1.0 FOR APPLICABLE PROJECT GENERAL NOTES.
2. SEE SHEETS C2.0 THRU C2.3 FOR EXISTING CONDITIONS.
3. ITEMS NOT NOTED TO BE REMOVED SHALL REMAIN.
4. SEE SHEET C4.0 FOR ADDITIONAL DETAILED UTILITY REMOVAL AND RELOCATION INFORMATION.
5. ALL EXISTING SANITARY SEWER TO REMAIN.
6. CONTRACTOR SHALL CLEAR AND GRUB AS NECESSARY TO INSTALL PROPOSED IMPROVEMENTS.
7. SOILS SAMPLES FROM THE CONTAMINATED SOIL PIT WILL BE TESTED BY RSA TO ENSURE CONTAMINATED SOIL HAS BEEN REMOVED.
8. ALL SUBSTATION COMPONENTS TO BE REMOVED BY CONTRACTOR.
9. CONTRACTOR TO REMOVE AND DISPOSE OF ALL COUNTERPOISE ENCOUNTERED WITHIN THE SUBSTATION LIMITS.
10. METAL & CONCRETE POLES AND COPPER 46KV LINES (HEADED SOUTH OUT OF SUBSTATION) TO BE SALVAGED AND TAKEN TO THE REDSTONE ARSENAL HIGH VOLTAGE SHOP, CLOSE TO BUILDING 3542. THE SHOP IS APPROXIMATELY 2.5 MILES FROM THE SITE. COORDINATE WITH REDSTONE ARSENAL. EACH REEL OF WIRE TO CONTAIN A MAXIMUM OF 3,000 LF OR 2,000 LBS.
11. ALL WOODEN POLES TO BE DISPOSED OF AT CONTRACTOR'S DISCRETION.
12. ALL HDPE PIPE TO BE RETAINED BY THE CITY.

LBYD
Civil and Structural Engineers
Birmingham, Alabama
Atlanta, Georgia
Huntsville, Alabama
Tampa Bay, Florida
www.lbyd.com

LBYD Project Number
302-10-002A

LBYD, Inc.
305 Church Street SW
Suite 719
Huntsville, AL 35801
Phone (256) 533-1575
Fax (256) 533-1744

© copyright 2011
These drawings and design intent are the sole property of City of Huntsville which may not be reproduced without written permission.

ALABAMA REGISTERED No. 26754 PROFESSIONAL ENGINEER
11/02/2012

HUNTSVILLE
The Star of Alabama

DEMOLITION PLAN
REDSTONE GATEWAY - PACKAGE I
LAKE F
CITY OF HUNTSVILLE
HUNTSVILLE, ALABAMA

REV	DATE	DRAWN	CHECKED	CHECKED	DESCRIPTION	TRAFFIC	REAL ESTATE	PE	DRAINAGE
2	11/2/12	DAC	RAN	RAN	ADDENDUM #2				

DRAWN: TBE
DATE: August 10, 2012

C3.1

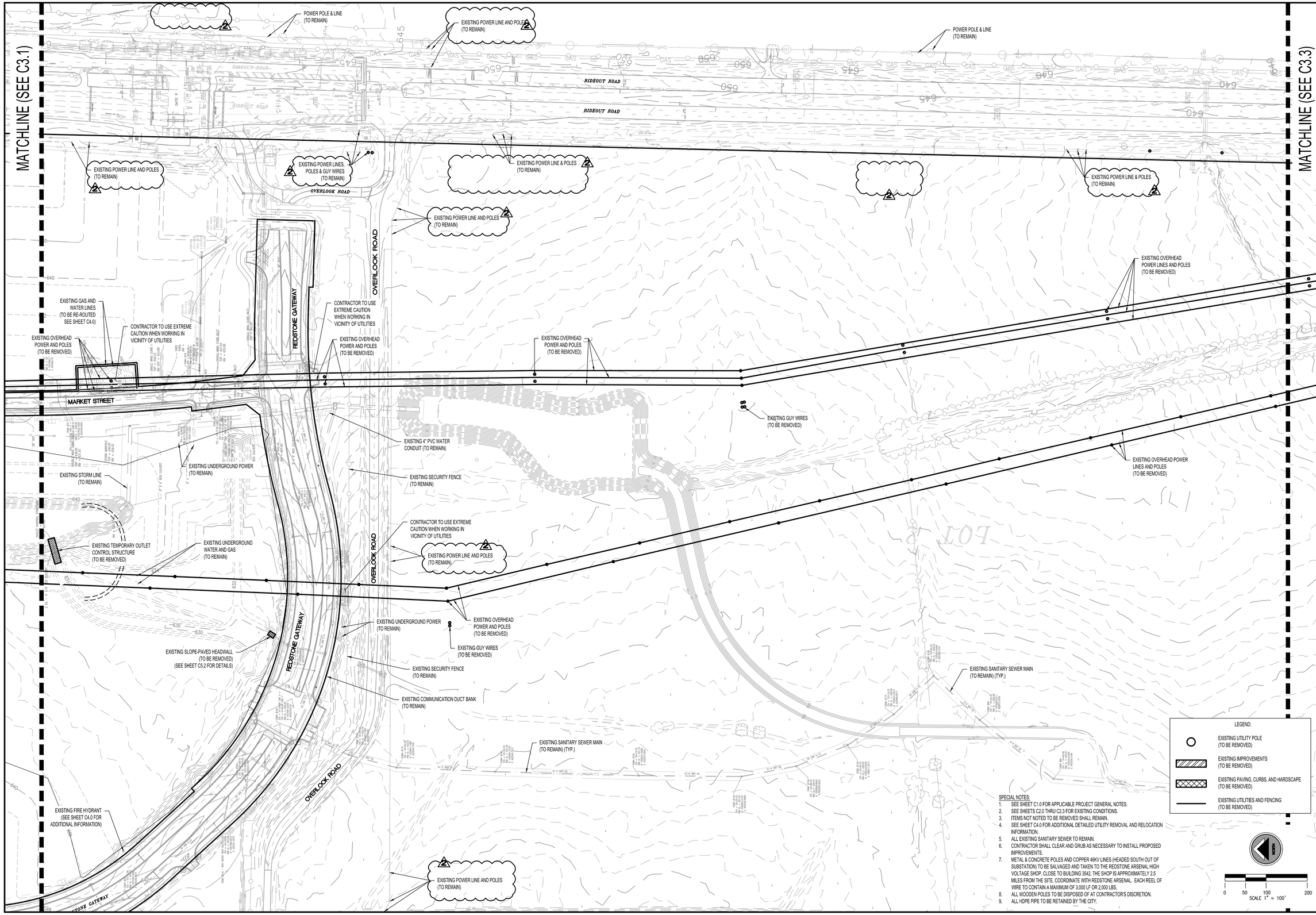

SPECIAL NOTES:

1. SEE SHEET C1.0 FOR APPLICABLE PROJECT GENERAL NOTES.
2. SEE SHEETS C2.0 THRU C2.3 FOR EXISTING CONDITIONS.
3. ITEMS NOT NOTED TO BE REMOVED SHALL REMAIN.
4. SEE SHEET C4.0 FOR ADDITIONAL DETAILED UTILITY REMOVAL AND RELOCATION INFORMATION.
5. ALL EXISTING SANITARY SEWER TO REMAIN.
6. CONTRACTOR SHALL CLEAR AND GRUB AS NECESSARY TO INSTALL PROPOSED IMPROVEMENTS.
7. METAL & CONCRETE POLES AND COPPER 46KV LINES (HEADED SOUTH OUT OF SUBSTATION) TO BE SALVAGED AND TAKEN TO THE REDSTONE ARSENAL HIGH VOLTAGE SHOP, CLOSE TO BUILDING 3542. THE SHOP IS APPROXIMATELY 2.5 MILES FROM THE SITE. COORDINATE WITH REDSTONE ARSENAL. EACH REEL OF WIRE TO CONTAIN A MAXIMUM OF 3,000 LF OR 2,000 LBS.
8. ALL WOODEN POLES TO BE DISPOSED OF AT CONTRACTOR'S DISCRETION.
9. ALL HDPE PIPE TO BE RETAINED BY THE CITY.

LBYD
Civil and Structural Engineers
Birmingham, Alabama
Atlanta, Georgia
Huntsville, Alabama
Tampa Bay, Florida
www.lbyd.com

LBYD Project Number
302-10-002A

LBYD, Inc.
305 Church Street SW
Suite 719
Huntsville, AL 35801
Phone (256) 533-1575
Fax (256) 533-1744

© copyright 2011
These drawings and design intent are the sole property of City of Huntsville which may not be reproduced without written permission.

ALABAMA REGISTERED No. 26754 PROFESSIONAL ENGINEER
11/02/2012

HUNTSVILLE
The Star of Alabama

DEMOLITION PLAN
REDSTONE GATEWAY - PACKAGE I
LAKE F
CITY OF HUNTSVILLE
HUNTSVILLE, ALABAMA

REV	DATE	DRAWN	CHECKED	DESCRIPTION	TRAFFIC	REAL ESTATE	PE	DRAINAGE
2	11/2/12	TAR	RAN	ADDENDUM #2				

DRAWN: TBE
CHECKED: RAN
DATE: August 10, 2012

C3.2

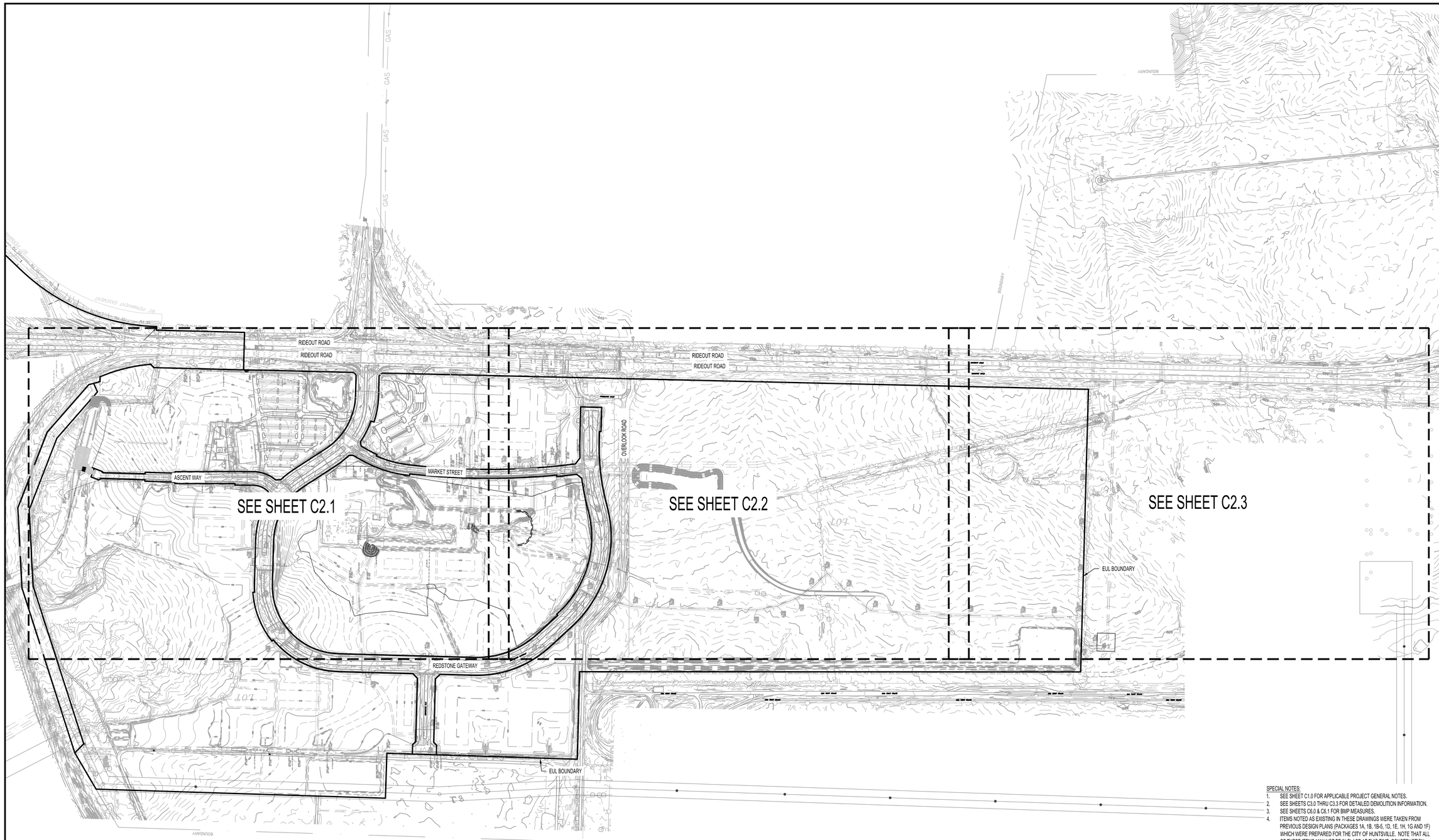

SPECIAL NOTES:

1. SEE SHEET C1.0 FOR APPLICABLE PROJECT GENERAL NOTES.
2. SEE SHEETS C3.0 THRU C3.3 FOR DETAILED DEMOLITION INFORMATION.
3. SEE SHEETS C5.0 & C6.1 FOR BMP MEASURES.
4. ITEMS NOTED AS EXISTING IN THESE DRAWINGS WERE TAKEN FROM PREVIOUS DESIGN PLANS (PACKAGES 1A, 1B, 1B-5, 1D, 1E, 1H, 1G AND 1F) WHICH WERE PREPARED FOR THE CITY OF HUNTSVILLE. NOTE THAT ALL OF THESE ITEMS MAY NOT BE IN PLACE AT THIS TIME. CONSTRUCTION FOR PACKAGES 1E, 1F AND BUILDING RG7200 WILL BE ONGOING DURING PACKAGE I WITH THE CONSTRUCTION OF BUILDING RG1200 AND RETAIL PROJECTS ANTICIPATED TO START DURING PACKAGE I CONSTRUCTION. REFER TO PROJECT SPECIFICATIONS FOR DIRECTIONS TO OBTAIN RELATED DRAWINGS.

NORTH

0 150 300 600
SCALE 1" = 300'

LBYD
Civil and Structural Engineers
Birmingham, Alabama
Atlanta, Georgia
Huntsville, Alabama
Tampa Bay, Florida
www.lbyd.com

LBYD Project Number
302-10-002A

LBYD, Inc.
305 Church Street SW
Suite 719
Huntsville, AL 35801
Phone (256) 533-1575
Fax (256) 533-1744

© copyright 2011
These drawings and design intent are the sole property of City of Huntsville which may not be reproduced without written permission.

ALABAMA REGISTERED No. 26754 PROFESSIONAL ENGINEER
8/10/2012

HUNTSVILLE
The Star of Alabama

OVERALL EXISTING CONDITIONS PLAN

REDSTONE GATEWAY - PACKAGE I

LAKE F
CITY OF HUNTSVILLE
HUNTSVILLE, ALABAMA

REV	DATE	DRAWN	CHECKED	DESCRIPTION	TRAFFIC	REAL ESTATE	PC	DRAINAGE
DRAWN: TBE		CHECKED: RAN		DATE: August 10, 2012				

C2.0

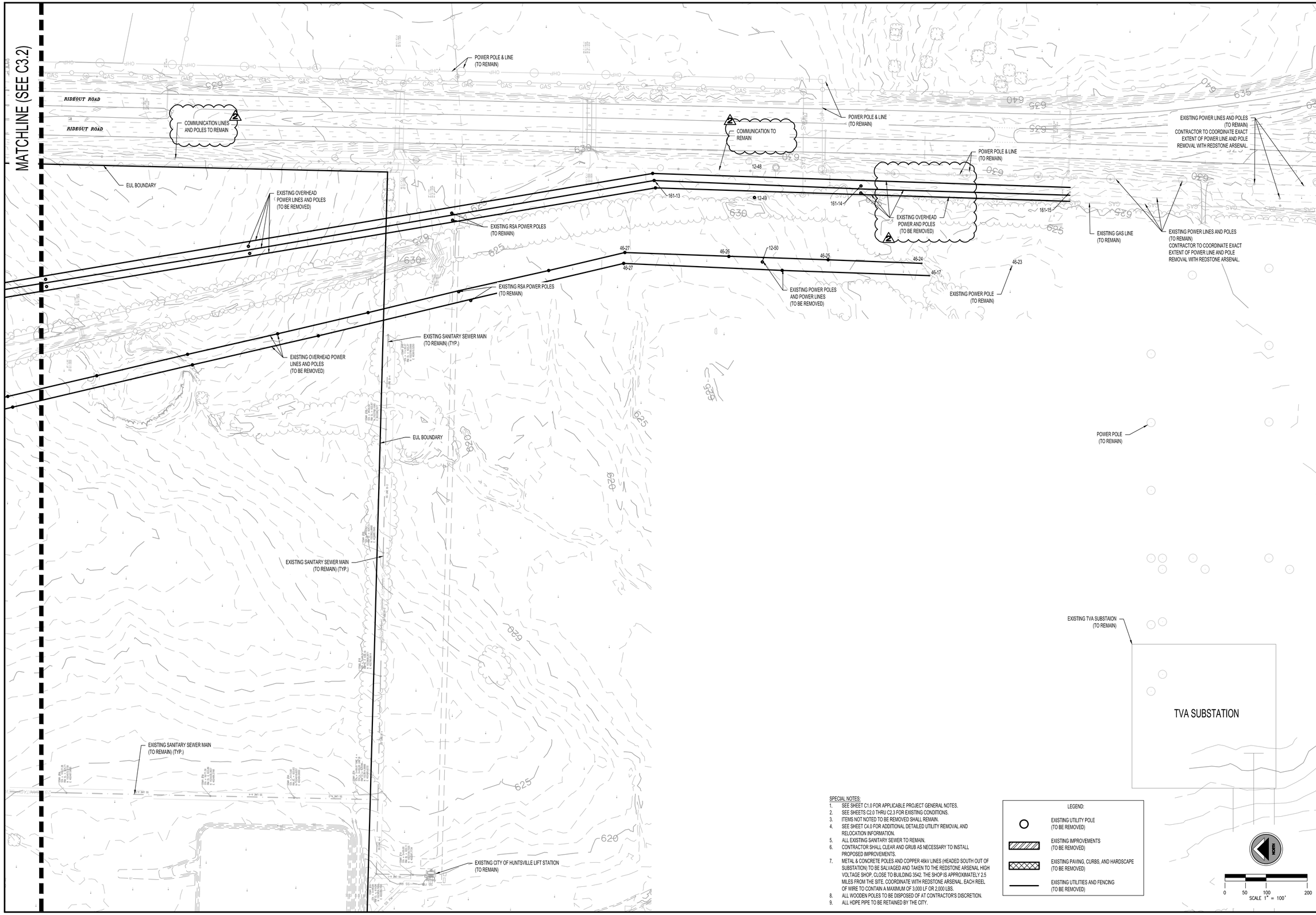

SPECIAL NOTES:

1. SEE SHEET C1.0 FOR APPLICABLE PROJECT GENERAL NOTES.
2. SEE SHEETS C2.0 THRU C2.3 FOR EXISTING CONDITIONS.
3. ITEMS NOT NOTED TO BE REMOVED SHALL REMAIN.
4. SEE SHEET C4.0 FOR ADDITIONAL DETAILED UTILITY REMOVAL AND RELOCATION INFORMATION.
5. ALL EXISTING SANITARY SEWER TO REMAIN.
6. CONTRACTOR SHALL CLEAR AND GRUB AS NECESSARY TO INSTALL PROPOSED IMPROVEMENTS.
7. METAL & CONCRETE POLES AND COPPER 46kV LINES (HEADED SOUTH OUT OF SUBSTATION) TO BE SALVAGED AND TAKEN TO THE REDSTONE ARSENAL HIGH VOLTAGE SHOP, CLOSE TO BUILDING 3542. THE SHOP IS APPROXIMATELY 2.5 MILES FROM THE SITE. COORDINATE WITH REDSTONE ARSENAL. EACH REEL OF WIRE TO CONTAIN A MAXIMUM OF 3,000 LF OR 2,000 LBS.
8. ALL WOODEN POLES TO BE DISPOSED OF AT CONTRACTOR'S DISCRETION.
9. ALL HDPE PIPE TO BE RETAINED BY THE CITY.

LEGEND:

- EXISTING UTILITY POLE (TO BE REMOVED)
- EXISTING IMPROVEMENTS (TO BE REMOVED)
- EXISTING PAVING, CURBS, AND HARDSCAPE (TO BE REMOVED)
- EXISTING UTILITIES AND FENCING (TO BE REMOVED)

0 50 100 200
SCALE 1" = 100'

LBYD
Civil and Structural Engineers
Birmingham, Alabama
Atlanta, Georgia
Huntsville, Alabama
Tampa Bay, Florida
www.lbyd.com

LBYD Project Number
302-10-002A

LBYD, Inc.
305 Church Street SW
Suite 719
Huntsville, AL 35801
Phone (256) 533-1575
Fax (256) 533-1744

© copyright 2011
These drawings and design intent are the sole property of City of Huntsville which may not be reproduced without written permission.

ALABAMA REGISTERED No. 26754 PROFESSIONAL ENGINEER
11/02/2012

HUNTSVILLE
The Star of Alabama

DEMOLITION PLAN
REDSTONE GATEWAY - PACKAGE I
LAKE F
CITY OF HUNTSVILLE
HUNTSVILLE, ALABAMA

REV	DATE	DRAWN	CHECKED	DESCRIPTION	TRAFFIC	REAL ESTATE	COH REVIEW	PE	DRAINAGE
2	11/2/12	TAR	RAN	ADDENDUM #2					

DRAWN: TBE
CHECKED: RAN
DATE: August 10, 2012

C3.3

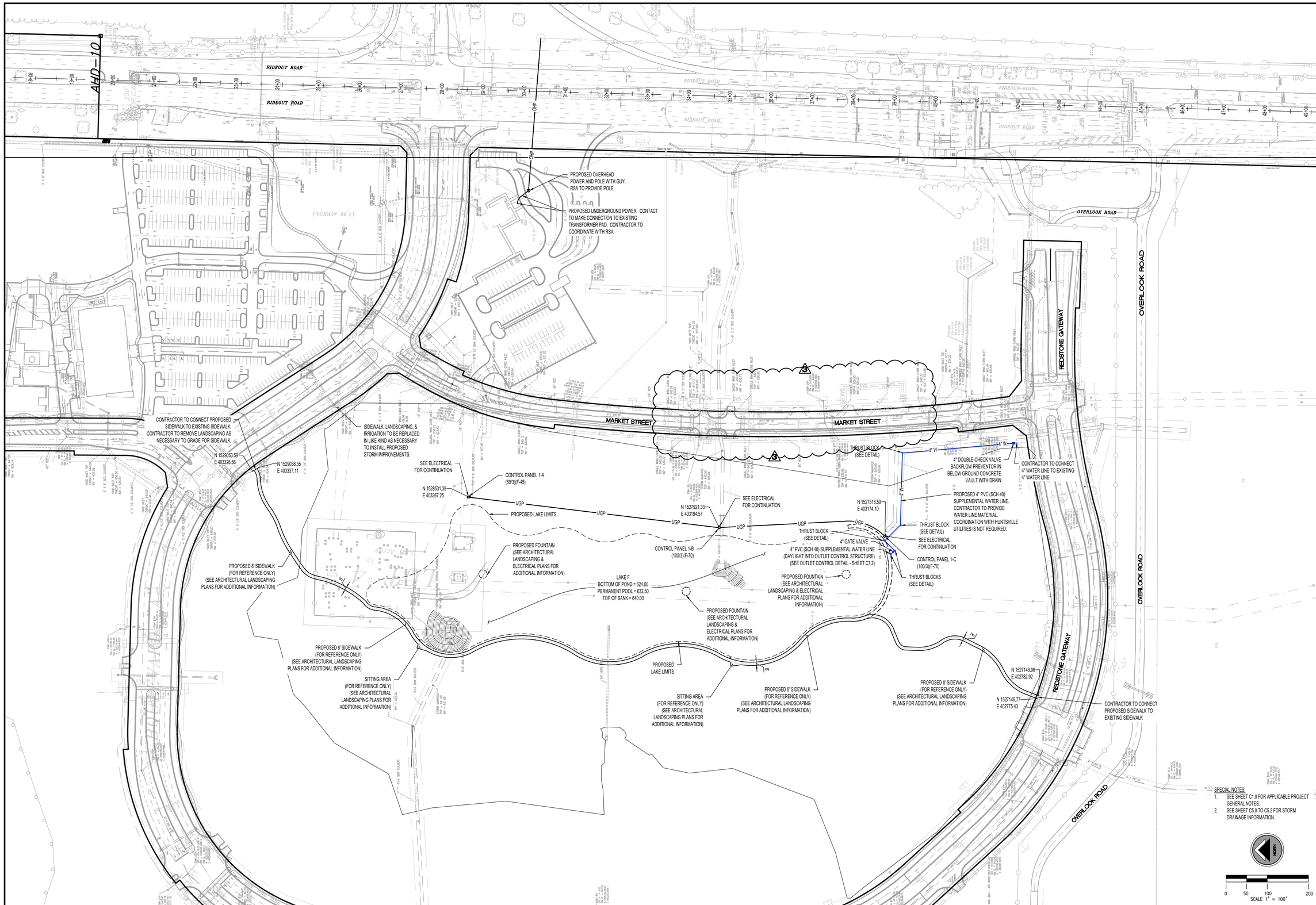

LBYD
Civil and Structural Engineers
Birmingham, Alabama
Atlanta, Georgia
Huntsville, Alabama
Tampa Bay, Florida
www.lbyd.com

LBYD Project Number
302-10-002A

LBYD, Inc.
305 Church Street SW
Suite 719
Huntsville, AL 35801
Phone (256) 533-1575
Fax (256) 533-1744

© copyright 2011
These drawings and design intent are the sole property of City of Huntsville which may not be reproduced without written permission.

ALABAMA REGISTERED No. 26754 PROFESSIONAL ENGINEER
1/21/2013

HUNTSVILLE
The Star of Alabama

SITE LAYOUT & UTILITY PLAN
REDSTONE GATEWAY - PACKAGE I
LAKE F
CITY OF HUNTSVILLE
HUNTSVILLE, ALABAMA

REV	DATE	DRAWN	CHECKED	DESCRIPTION	TRAFFIC	REAL ESTATE	PE	DRAINAGE
3	1/21/13	AES	RAN	PKG. I - I COMMENTS				
2	11/2/12	TAC	RAN	ADDENDUM #2				

DRAWN: TBE
CHECKED: RAN
DATE: August 10, 2012

C4.0-R3

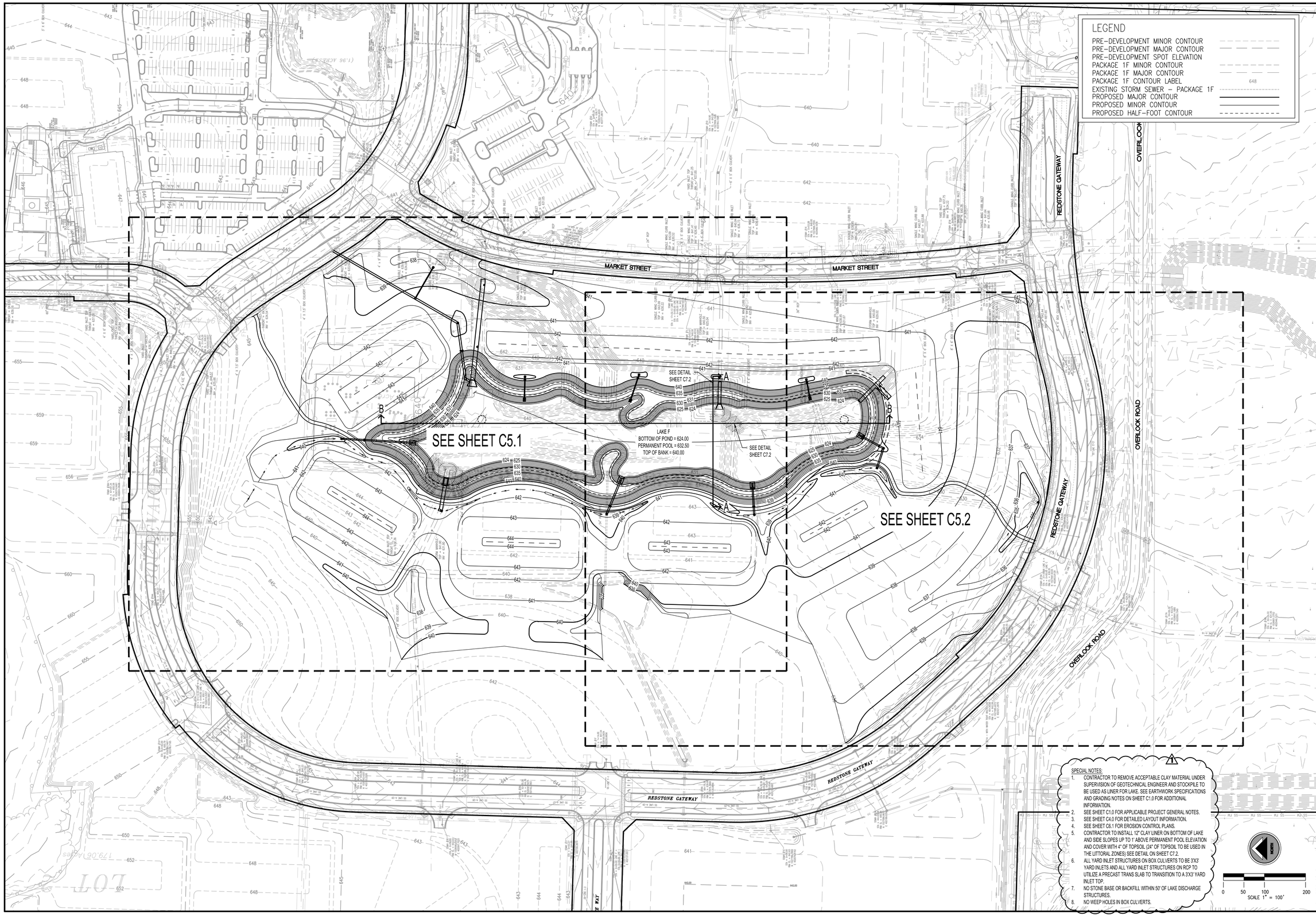

SPECIAL NOTES:

1. CONTRACTOR TO REMOVE ACCEPTABLE CLAY MATERIAL UNDER SUPERVISION OF GEOTECHNICAL ENGINEER AND STOCKPILE TO BE USED AS LINER FOR LAKE. SEE EARTHWORK SPECIFICATIONS AND GRADING NOTES ON SHEET C1.0 FOR ADDITIONAL INFORMATION.
2. SEE SHEET C1.0 FOR APPLICABLE PROJECT GENERAL NOTES.
3. SEE SHEET C4.0 FOR DETAILED LAYOUT INFORMATION.
4. SEE SHEET C6.1 FOR EROSION CONTROL PLANS.
5. CONTRACTOR TO INSTALL 12" CLAY LINER ON BOTTOM OF LAKE AND SIDE SLOPES UP TO 1' ABOVE PERMANENT POOL ELEVATION AND COVER WITH 4" OF TOPSOIL (24" OF TOPSOIL TO BE USED IN THE LITTORAL ZONES) SEE DETAIL ON SHEET C7.2.
6. ALL YARD INLET STRUCTURES ON BOX CULVERTS TO BE 3'X3' YARD INLETS AND ALL YARD INLET STRUCTURES ON RCP TO UTILIZE A PRECAST TRANS SLAB TO TRANSITION TO A 3'X3' YARD INLET TOP.
7. NO STONE BASE OR BACKFILL WITHIN 50' OF LAKE DISCHARGE STRUCTURES.
8. NO WEEP HOLES IN BOX CULVERTS.

LBYD
Civil and Structural Engineers
Birmingham, Alabama
Atlanta, Georgia
Huntsville, Alabama
Tampa Bay, Florida
www.lbyd.com

LBYD Project Number
302-10-002A

LBYD, Inc.
305 Church Street SW
Suite 719
Huntsville, AL 35801
Phone (256) 533-1575
Fax (256) 533-1744

© copyright 2011
These drawings and design intent are the sole property of City of Huntsville which may not be reproduced without written permission.

ALABAMA REGISTERED No. 26754 PROFESSIONAL ENGINEER
1/21/2013

HUNTSVILLE
The Star of Alabama

OVERALL GRADING & STORM DRAINAGE PLAN
REDSTONE GATEWAY - PACKAGE I
LAKE F
CITY OF HUNTSVILLE
HUNTSVILLE, ALABAMA

REV	DATE	DRAWN	CHECKED	DESCRIPTION	TRAFFIC	REAL ESTATE	PE	DRAINAGE
1	1/21/13	AES	RAN	PKG I -1 COMMENTS				

DRAWN: TBE
CHECKED: RAN
DATE: August 10, 2012

C5.0-R1

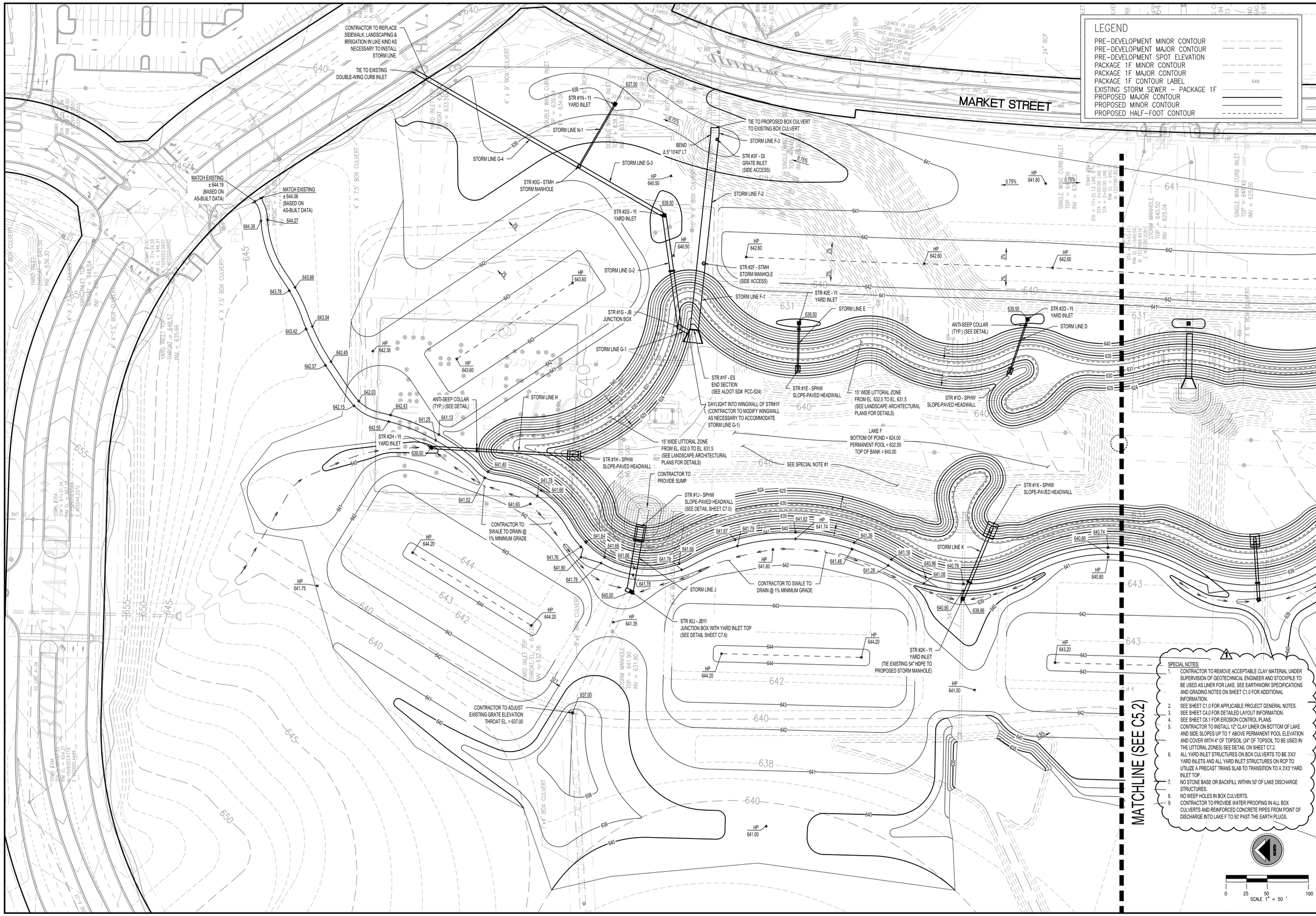

SPECIAL NOTES:

1. CONTRACTOR TO REMOVE ACCEPTABLE CLAY MATERIAL UNDER SUPERVISION OF GEOTECHNICAL ENGINEER AND STOCKPILE TO BE USED AS LINER FOR LAKE. SEE EARTHWORK SPECIFICATIONS AND GRADING NOTES ON SHEET C1.0 FOR ADDITIONAL INFORMATION.
2. SEE SHEET C1.0 FOR APPLICABLE PROJECT GENERAL NOTES.
3. SEE SHEET C4.0 FOR DETAILED LAYOUT INFORMATION.
4. SEE SHEET C6.1 FOR EROSION CONTROL PLANS.
5. CONTRACTOR TO INSTALL 12" CLAY LINER ON BOTTOM OF LAKE AND SIDE SLOPES UP TO 1' ABOVE PERMANENT POOL ELEVATION AND COVER WITH 4" OF TOPSOIL (24" OF TOPSOIL TO BE USED IN THE LITTORAL ZONES) SEE DETAIL ON SHEET C7.2.
6. ALL YARD INLET STRUCTURES ON BOX CULVERTS TO BE 3'X3' YARD INLETS AND ALL YARD INLET STRUCTURES ON RCP TO UTILIZE A PRECAST TRANS SLAB TO TRANSITION TO A 3'X3' YARD INLET TOP.
7. NO STONE BASE OR BACKFILL WITHIN 50' OF LAKE DISCHARGE STRUCTURES.
8. NO WEEP HOLES IN BOX CULVERTS.
9. CONTRACTOR TO PROVIDE WATER PROOFING IN ALL BOX CULVERTS AND REINFORCED CONCRETE PIPES FROM POINT OF DISCHARGE INTO LAKE F TO 50' PAST THE EARTH PLUGS.

LBYD
Civil and Structural Engineers
Birmingham, Alabama
Atlanta, Georgia
Huntsville, Alabama
Tampa Bay, Florida
www.lbyd.com

LBYD Project Number
302-10-002A

LBYD, Inc.
305 Church Street SW
Suite 719
Huntsville, AL 35801
Phone (256) 533-1575
Fax (256) 533-1744

© copyright 2011
These drawings and design intent are the sole property of City of Huntsville which may not be reproduced without written permission.

ALABAMA REGISTERED No. 26754 PROFESSIONAL ENGINEER
1/21/2013

HUNTSVILLE The Star of Alabama

GRADING & STORM DRAINAGE PLAN
REDSTONE GATEWAY - PACKAGE I
LAKE F
CITY OF HUNTSVILLE
HUNTSVILLE, ALABAMA

REV	DATE	DRAWN	CHECKED	DESCRIPTION	TRAFFIC	REAL ESTATE	PE	DRAINAGE
1	1/21/13	AES	RAN	PKG. I -1 COMMENTS				

DRAWN: TBE
CHECKED: RAN
DATE: August 10, 2012
CON. REVIEW

C5.1-R1

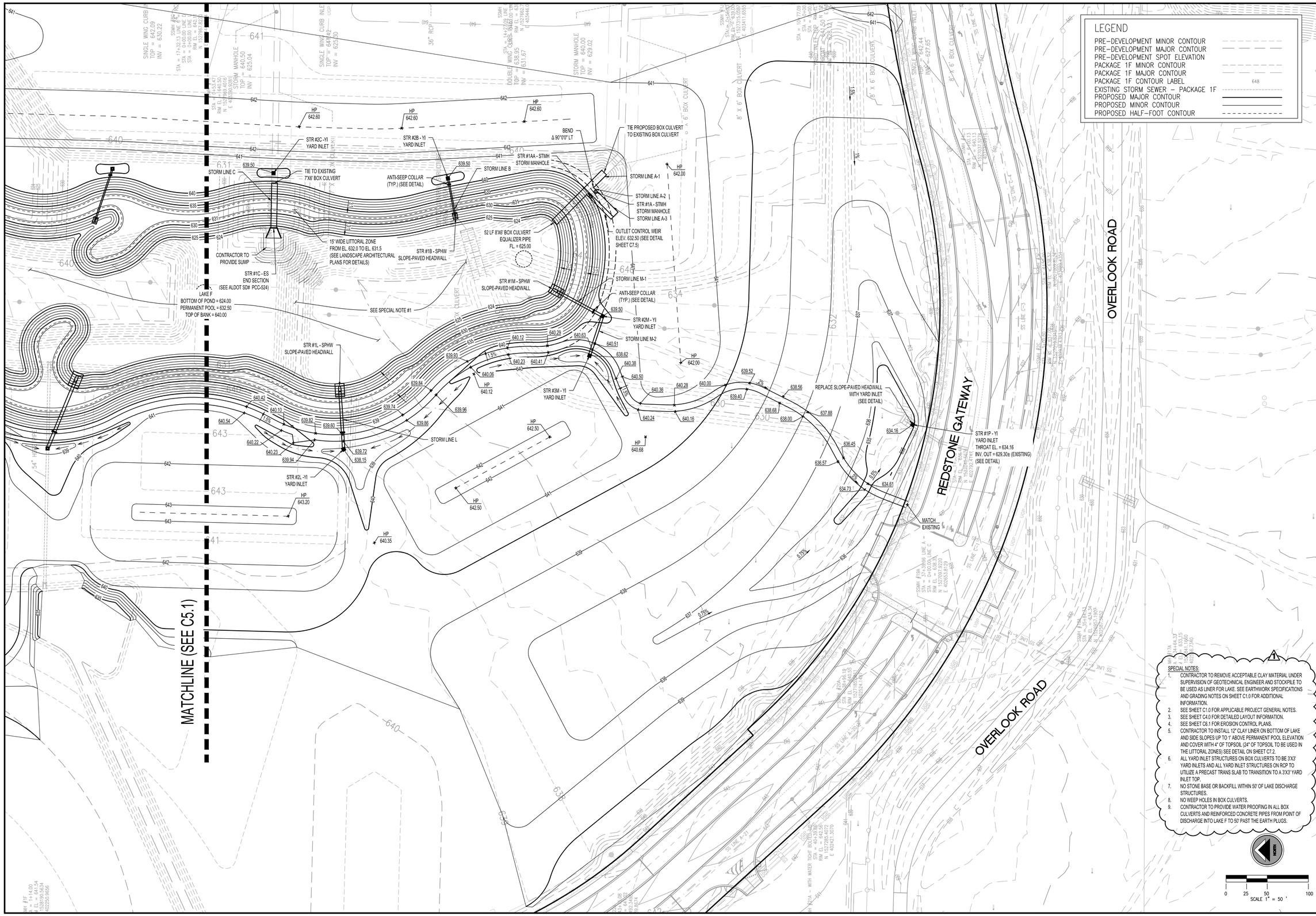

LBYD
Civil and Structural Engineers
Birmingham, Alabama
Atlanta, Georgia
Huntsville, Alabama
Tampa Bay, Florida
www.lbyd.com

LBYD Project Number
302-10-002A

LBYD, Inc.
305 Church Street SW
Suite 719
Huntsville, AL 35801
Phone (256) 533-1575
Fax (256) 533-1744

© copyright 2011
These drawings and design intent are the sole property of City of Huntsville which may not be reproduced without written permission.

ALABAMA REGISTERED No. 26754 PROFESSIONAL ENGINEER
1/21/2013

HUNTSVILLE The Star of Alabama

GRADING & STORM DRAINAGE PLAN
REDSTONE GATEWAY - PACKAGE I
LAKE F
CITY OF HUNTSVILLE
HUNTSVILLE, ALABAMA

REV	DATE	DRAWN	CHECKED	DESCRIPTION	TRAFFIC	REAL ESTATE	PE	DRAINAGE
1	1/21/13	AES	RAN	PKG I – 1 COMMENTS				

DRAWN: TBE
DATE: 1/21/13
CHECKED: RAN
DATE: August 10, 2012

C5.2-R1

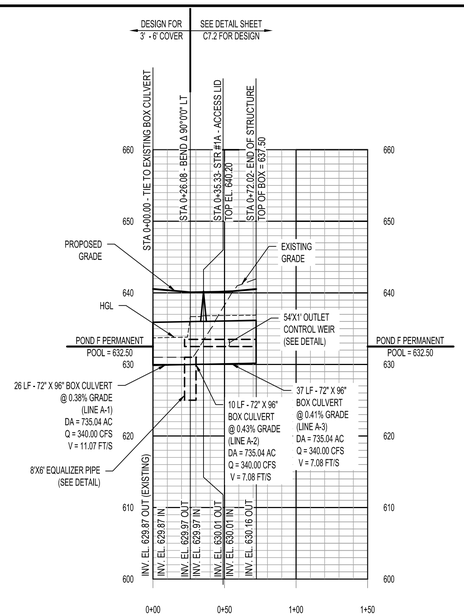

Storm Line A

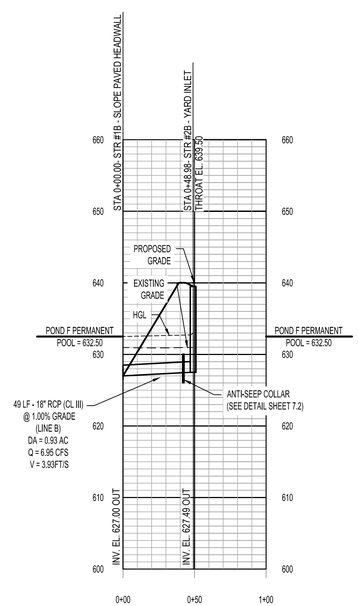

Storm Line B

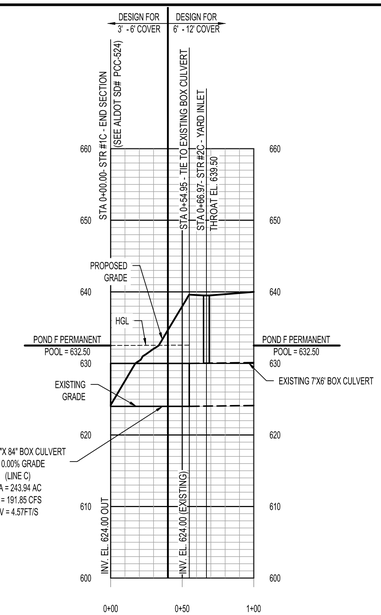

Storm Line C

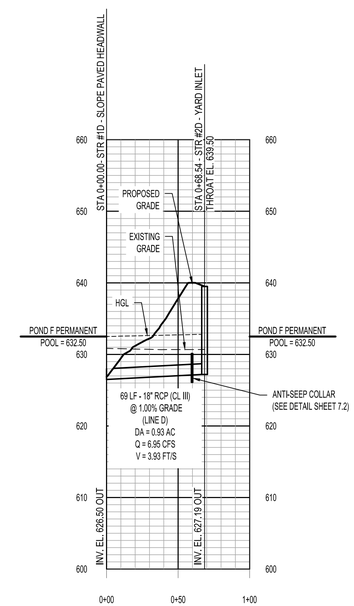

Storm Line D

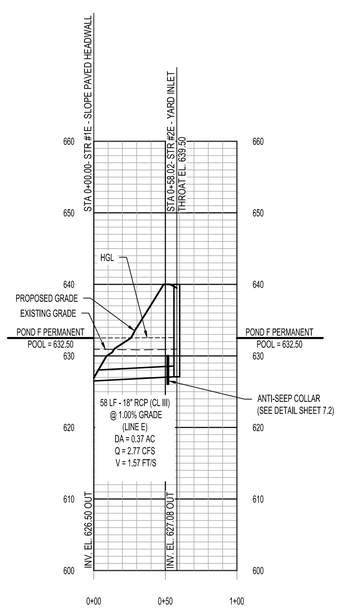

Storm Line E

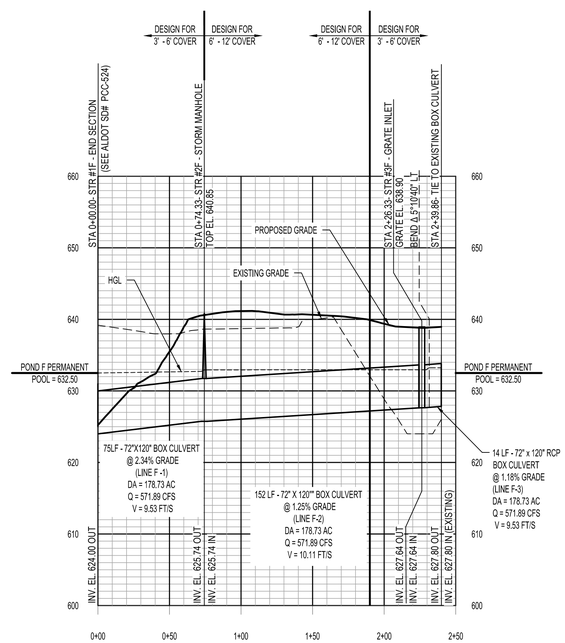

Storm Line F

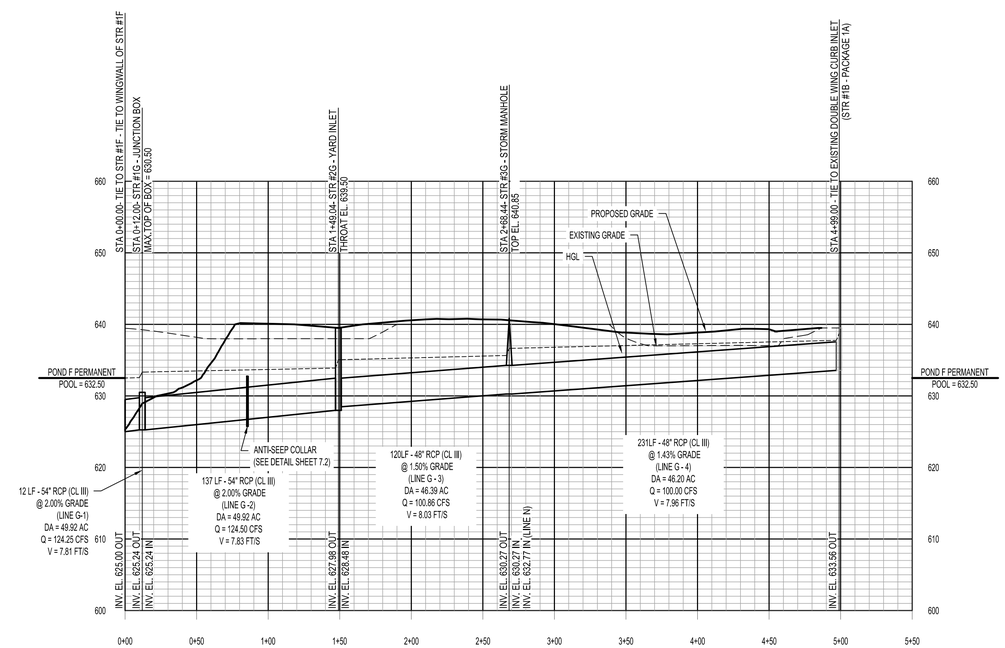

Storm Line G

* POND F PERMANENT POOL ELEVATION = 632.50 (FINAL DEVELOPMENT).

SCALE:
1"=50' HORIZONTAL
1"=10' VERTICAL

HGL
EXISTING GRADE
PROPOSED GRADE
STORM SEWER

SPECIAL NOTES:

1. PIPES SIZED FOR THE 25-YEAR STORM UNLESS OTHERWISE NOTED.
2. SEE SHEETS C5.0 TO C5.2 FOR GRADING AND STORM PIPE LAYOUT INFORMATION.
3. ALL YARD INLETS TO BE 3' YARD INLETS. ALL YARD INLET STRUCTURES ON BOX CULVERTS TO BE 3'X3' YARD INLETS AND ALL YARD INLET STRUCTURES ON RCP TO UTILIZE A PRECAST TRANS SLAB TO TRANSITION TO A 3'X3' YARD INLET TOP.
4. ALL STORM PIPES & BOX CULVERTS ENTERING THE POND TO BE BACKFILLED WITH COMPACTED SOIL FROM THE HEADWALL TO THE ANTI-SEEP COLLAR ON ALL LINES.
5. NO WEEP HOLES ARE TO BE INSTALLED IN THE BOX CULVERTS.
6. BOX CULVERT DESIGN FOR STORM LINE A-2 & A-3 SHOWN IN THIS DETAIL TO CONTROL OVER ALDOT DETAILS FOR 8'X6' BOX CULVERTS.

LBYD
Civil and Structural Engineers
Birmingham, Alabama
Atlanta, Georgia
Huntsville, Alabama
Tampa Bay, Florida
www.lbyd.com

LBYD Project Number
302-10-002A

LBYD, Inc.
305 Church Street SW
Suite 719
Huntsville, AL 35801
Phone (256) 533-1575
Fax (256) 533-1744

© copyright 2011
These drawings and design intent are the sole property of City of Huntsville which may not be reproduced without written permission.

ALABAMA REGISTERED No. 26754 PROFESSIONAL ENGINEER
8/10/2012

HUNTSVILLE
The Star of Alabama

STORM PROFILES

REDSTONE GATEWAY - PACKAGE I

LAKE F
CITY OF HUNTSVILLE
HUNTSVILLE, ALABAMA

REV	DATE	DRAWN	CHECKED	DESCRIPTION	TRAFFIC	REAL ESTATE	PE	DRAINAGE
						CGR REVIEW		

DRAWN: TBE
DATE: August 10, 2012
CHECKED: RAN

C5.3

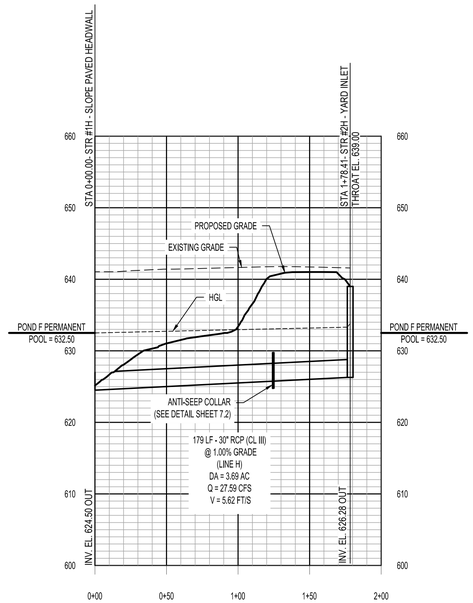

Storm Line H

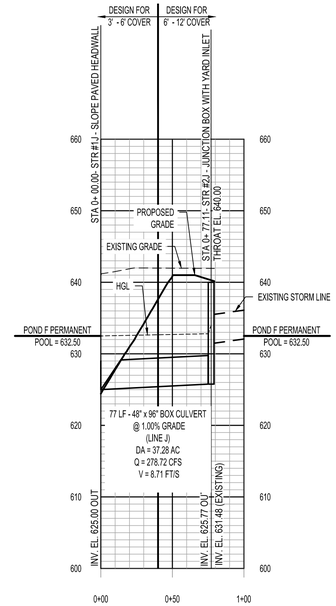

Storm Line J

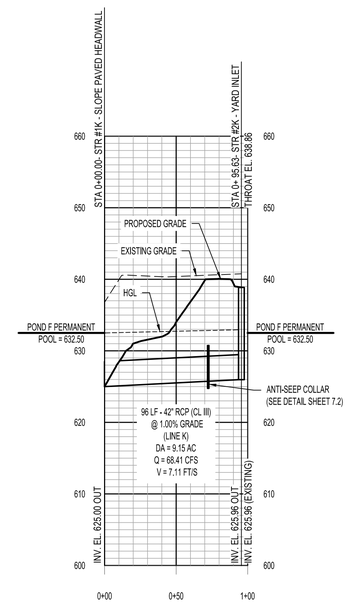

Storm Line K

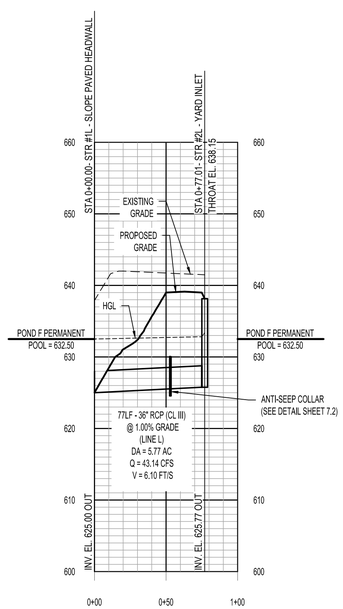

Storm Line L

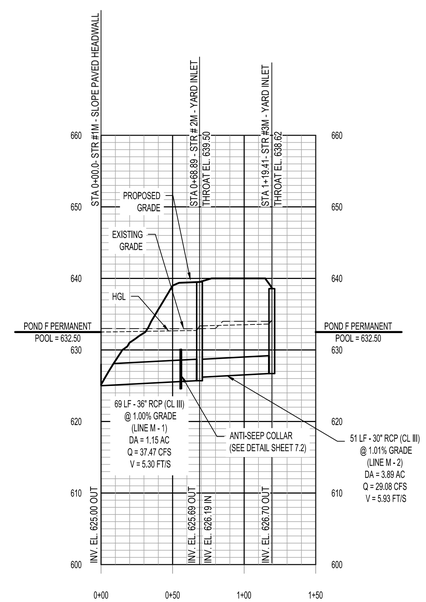

Storm Line M

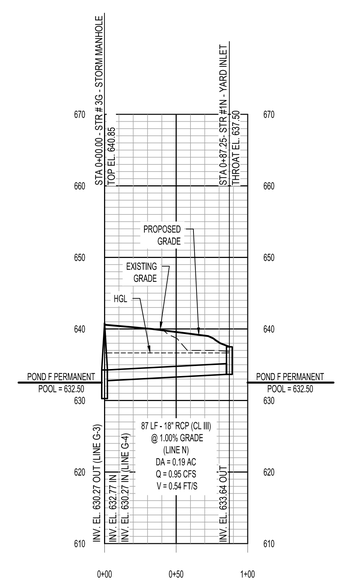

Storm Line N

SPECIAL NOTES:

1. PIPES SIZED FOR THE 25-YEAR STORM UNLESS OTHERWISE NOTED.
2. SEE SHEETS C5.0 TO C5.2 FOR GRADING AND STORM PIPE LAYOUT INFORMATION.
3. ALL YARD INLETS TO BE 3' YARD INLETS. ALL YARD INLET STRUCTURES ON BOX CULVERTS TO BE 3'X3' YARD INLETS AND ALL YARD INLET STRUCTURES ON RCP TO UTILIZE A PRECAST TRANS SLAB TO TRANSITION TO A 3'X3' YARD INLET TOP.
4. ALL STORM PIPES & BOX CULVERTS ENTERING THE POND TO BE BACKFILLED WITH COMPACTED SOIL FROM THE HEADWALL TO THE ANTI-SEEP COLLAR ON ALL LINES.
5. NO WEEP HOLES ARE TO BE INSTALLED IN THE BOX CULVERTS.

* POND F PERMANENT POOL ELEVATION = 632.50 (FINAL DEVELOPMENT).

SCALE:
1"=50' HORIZONTAL
1"=10' VERTICAL

HGL
EXISTING GRADE
PROPOSED GRADE
STORM SEWER

LBYD
Civil and Structural Engineers
Birmingham, Alabama
Atlanta, Georgia
Huntsville, Alabama
Tampa Bay, Florida
www.lbyd.com

LBYD Project Number
302-10-002A

LBYD, Inc.
305 Church Street SW
Suite 719
Huntsville, AL 35801
Phone (256) 533-1575
Fax (256) 533-1744

© copyright 2011
These drawings and design intent are the sole property of City of Huntsville which may not be reproduced without written permission.

ALABAMA REGISTERED No. 26754 PROFESSIONAL ENGINEER
8/10/2012

HUNTSVILLE
The Star of Alabama

STORM PROFILES

REDSTONE GATEWAY - PACKAGE I
LAKE F
CITY OF HUNTSVILLE
HUNTSVILLE, ALABAMA

REV	DATE	DRAWN	CHECKED	DESCRIPTION	DATE	TRAFFIC	REAL ESTATE	PC	DRAINAGE
							CODE REVIEW		

DRAWN: TBE
CHECKED: RAN
DATE: August 10, 2012

C5.4

SPECIAL NOTES:

1. SEE SHEET C1.0 FOR ALL GENERAL NOTES.
2. SHEET C6.0 IS REPRESENTATIVE OF ALL EROSION CONTROL MEASURES SCHEDULED TO BE INSTALLED IN PACKAGE 1A, 1B AND 1F. THE PACKAGE I CONTRACTOR SHALL MODIFY, REMOVE, AND INSTALL EROSION CONTROL MEASURES AS NECESSARY THROUGHOUT THE DURATION AND PHASING OF CONSTRUCTION AND AS A MINIMUM INSTALL PROPOSED MEASURES PER THE PROPOSED EROSION CONTROL PLAN, C6.0).
3. CONTRACTOR SHALL PLACE TOPSOIL, SEED, FERTILIZER, AND EROSION CONTROL BLANKETS (ECB) IMMEDIATELY UPON THE COMPLETION OF THE GRADING. ALL PERMANENT EROSION CONTROL MEASURES SHALL BE CLOSELY COORDINATED WITH THE LANDSCAPING PLANS (SEE SHEETS LH-1 THROUGH LP-6)
4. PLACE TOPSOIL SEED AND EROSION BLANKET WHERE ECB IS DESIGNATED.
5. PACKAGE I CONTRACTOR IS RESPONSIBLE FOR PACKAGE 1A, 1B AND 1F BMP MEASURES AFFECTING THEIR WORK ONCE PACKAGE 1F CONTRACTOR HAS ACCEPTED AN AREA.
6. CONTRACTOR SHALL MAINTAIN AND REMOVE ANY EROSION CONTROL OR TEMPORARY CONSTRUCTION ITEMS (BY THE CONTRACTOR THAT INSTALLED THEM) ONCE THEY ARE ESTABLISHED OR NO LONGER REQUIRED.
7. SEE EROSION CONTROL NOTES ON SHEET C1.0 FOR ALDOT SEEDING REQUIREMENTS.

1

GRADE BUILDING PADS TO DRAIN. IF AREA IS STABILIZED AND NO CONSTRUCTION IS ONGOING OR PLANNED ONGOING FOR 13 DAYS, INSTALL TEMPORARY SEEDING OR STONE FOR TEMPORARY STABILIZATION.

2' HIGH BERM

MARKET STREET

REDSTONE GATEWAY

OVERLOOK ROAD

NORTH

SCALE 1" = 100'

0 50 100 200

LBYD
Civil and Structural Engineers
Birmingham, Alabama
Atlanta, Georgia
Huntsville, Alabama
Tampa Bay, Florida
www.lbyd.com

LBYD Project Number
302-10-002A

LBYD, Inc.
305 Church Street SW
Suite 719
Huntsville, AL 35801
Phone (256) 533-1575
Fax (256) 533-1744

© copyright 2011
These drawings and design intent are the sole property of City of Huntsville which may not be reproduced without written permission.

ALABAMA REGISTERED No. 26754 PROFESSIONAL ENGINEER

1/21/2013

HUNTSVILLE
The Star of Alabama

EXISTING EROSION CONTROL PLAN - FOR REFERENCE ONLY

REDSTONE GATEWAY - PACKAGE I

LAKE F
CITY OF HUNTSVILLE
HUNTSVILLE, ALABAMA

REV	DATE	DRAWN	CHECKED	DESCRIPTION	TRAFFIC	REAL ESTATE	PC	DRAINAGE
1	1/21/13	AES	RAN	PKG I -1 COMMENTS				

DRAWN: TBE
CHECKED: RAN
DATE: August 10, 2012

C6.0-R1

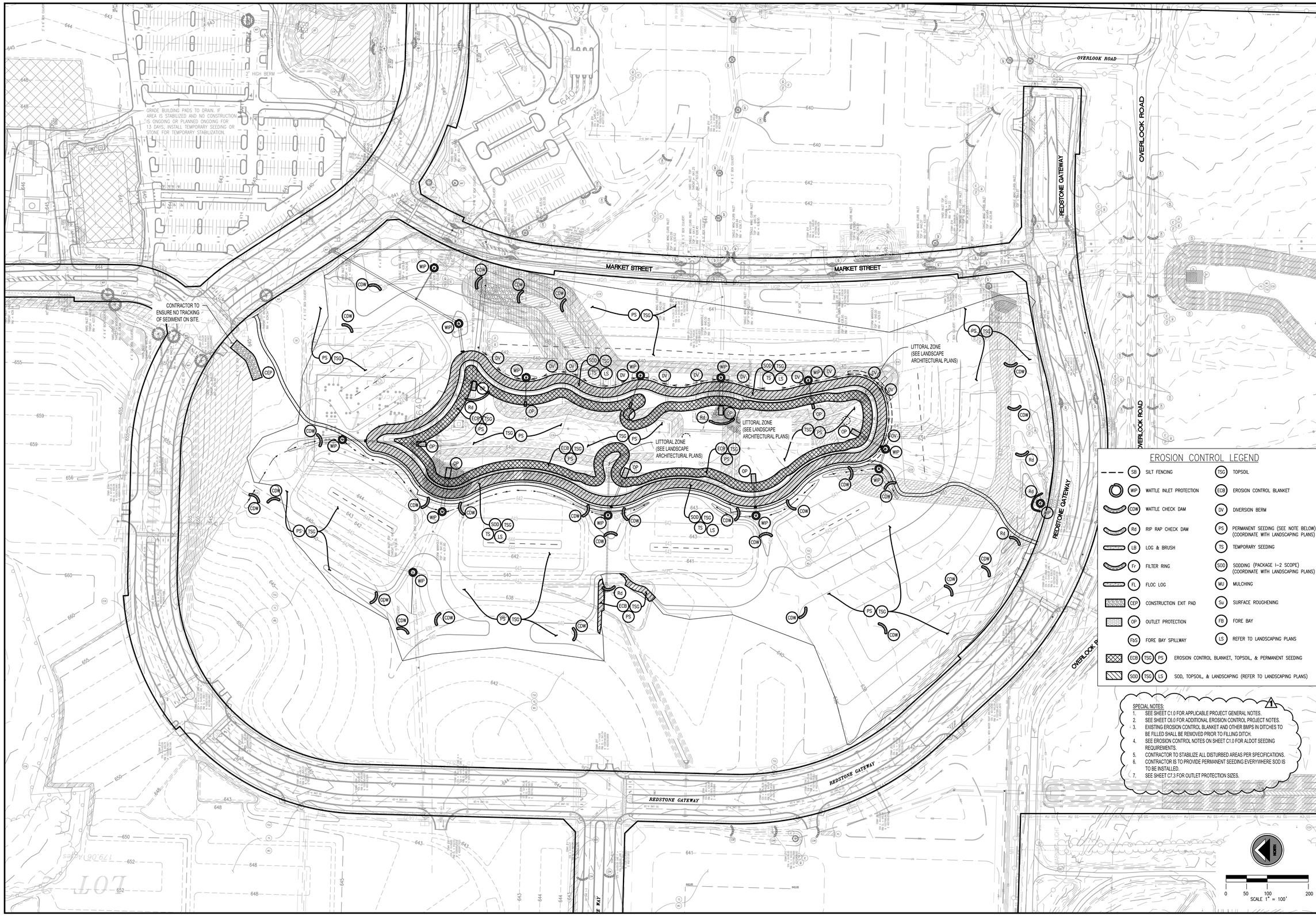

LBYD
Civil and Structural Engineers
Birmingham, Alabama
Atlanta, Georgia
Huntsville, Alabama
Tampa Bay, Florida
www.lbyd.com

LBYD Project Number
302-10-002A

LBYD, Inc.
305 Church Street SW
Suite 719
Huntsville, AL 35801
Phone (256) 533-1575
Fax (256) 533-1744

© copyright 2011
These drawings and design intent are the sole property of City of Huntsville which may not be reproduced without written permission.

ALABAMA REGISTERED No. 26754 PROFESSIONAL ENGINEER
1/21/2013

HUNTSVILLE
The Star of Alabama

EROSION CONTROL PLAN

REDSTONE GATEWAY - PACKAGE I
LAKE F
CITY OF HUNTSVILLE
HUNTSVILLE, ALABAMA

REV	DATE	DRAWN	CHECKED	DESCRIPTION	TRAFFIC	REAL ESTATE	PE	DRAINAGE
1	1/21/13	AES	RAN	PKG I-1 COMMENTS				

DRAWN: TBE
CHECKED: RAN
DATE: August 10, 2012

C6.1-R1

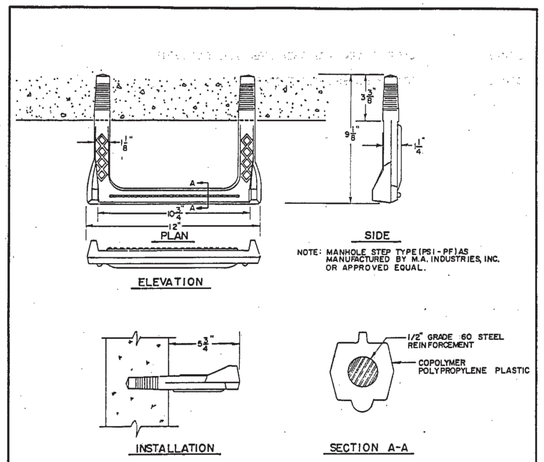

INLET STEP DETAILS

REVISIONS			CITY OF HUNTSVILLE	
DESCRIPTION	NAME	DATE	STANDARD LADDER BAR DETAIL	
DIRECTOR		DATE	ENGINEER OF PUBLIC WORKS CITY OF HUNTSVILLE, ALABAMA	DR-100 DRAWING NO.

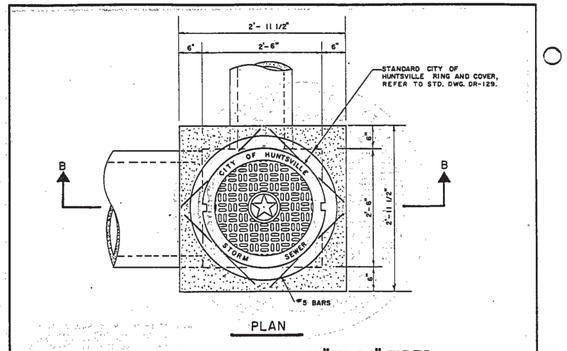

PLAN

JUNCTION BOX FOR 15" TO 24" PIPES

NOTES:

1. MIN. SIZE OF JUNCTION BOX IS 2'-6" x 2'-6".
2. MAX. SIZE OF A JUNCTION BOX IS 7'-0" (W2) x 13'-6" (W1) FOR 27" TO 60" PIPES.
3. MAX. SIZE OF A JUNCTION BOX IS 2'-6" x 2'-6" FOR 15" TO 24" PIPES.
4. MAX. HEIGHT OF A JUNCTION BOX IS AS SHOWN.
5. JUNCTION BOXES GREATER THAN 7'-0" x 13'-6" x 12'-0" SHALL BE A SPECIAL DESIGNED JUNCTION BOX.
6. ALL CONCRETE SHALL BE CLASS "A" AND SHALL DEVELOP A MINIMUM COMPRESSIVE STRENGTH OF 3000 PSI IN 28 DAYS.
7. REINFORCING SHALL BE INTERMEDIATE GRADE DEFORMED BARS AND SHALL CONFORM TO THE REQUIREMENTS OF THE STANDARD SPECIFICATIONS FOR BILLET STEEL, CONCRETE REINFORCEMENT BARS, ASTM A-15 AND DEFORMATIONS CONFORMING TO ASTM A-305.
8. STEPS ARE REQUIRED ON ALL JUNCTION BOXES WHEN DIMENSION FROM BOTTOM SLAB FLOW LINE TO TOP OF TOP SLAB IS GREATER THAN 4'-0".

REVISIONS			CITY OF HUNTSVILLE	
DESCRIPTION	NAME	DATE	JUNCTION BOX FOR-15" TO 24" PIPES TRAFFIC TYPE	
DIRECTOR		DATE	ENGINEER OF PUBLIC WORKS CITY OF HUNTSVILLE, ALABAMA	DR-140A DRAWING NO.

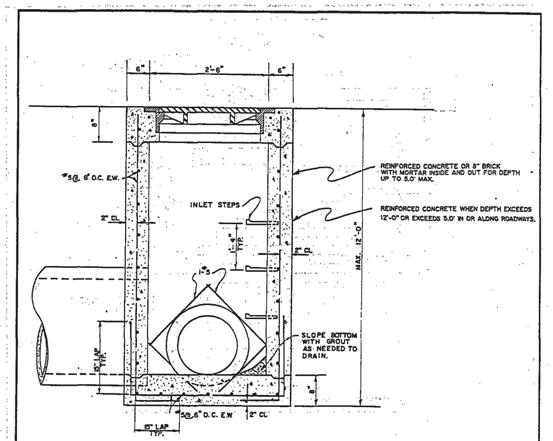

SECTION B-B

REVISIONS			CITY OF HUNTSVILLE	
DESCRIPTION	NAME	DATE	JUNCTION BOX FOR-15" TO 24" PIPES TRAFFIC TYPE	
DIRECTOR		DATE	ENGINEER OF PUBLIC WORKS CITY OF HUNTSVILLE, ALABAMA	DR-140B DRAWING NO.

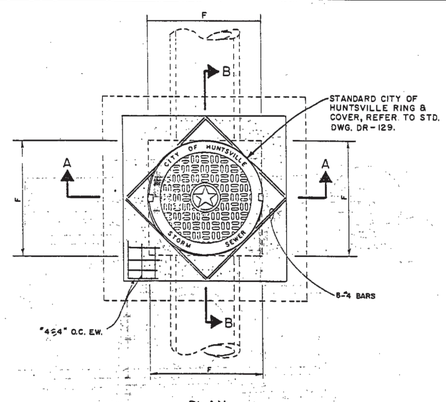

PLAN

NOTES:

1. DIMENSION "A" IS DETERMINED BY THE LARGEST DIAMETER PIPE ENTERING THE OPEN THOAT INLET.
2. STEPS ARE REQUIRED ON ALL INLETS WHEN DIMENSION FROM BOTTOM SLAB FLOW LINE TO TOP OF TOP SLAB IS GREATER THAN 4'-0".
3. ALL CONCRETE SHALL BE CLASS "A" AND SHALL DEVELOP A MINIMUM COMPRESSIVE STRENGTH OF 3000 PSI IN 28 DAYS.
4. REINFORCING SHALL BE INTERMEDIATE GRADE DEFORMED BARS AND SHALL CONFORM TO THE REQUIREMENTS OF THE STANDARD SPECIFICATIONS FOR BILLET STEEL, CONCRETE REINFORCEMENT BARS, ASTM A-15 AND DEFORMATIONS CONFORMING TO ASTM A - 305.
5. WHEN BRICK CONSTRUCTION IS USED, WALLS WILL BE 8" BRICK WHEN "H" IS LESS THAN 5'-0"; USE 12" BRICK WHEN "H" IS MORE THAN 5'-0", 1/2" THICK MORTAR ON BOTH SIDES.
6. PROVIDE CONCRETE APRON AT THROAT OPENINGS.

REVISIONS			CITY OF HUNTSVILLE	
DESCRIPTION	NAME	DATE	OPEN THROAT INLET DETAIL	
DIRECTOR		DATE	ENGINEER OF PUBLIC WORKS CITY OF HUNTSVILLE, ALABAMA	DR-127A DRAWING NO.

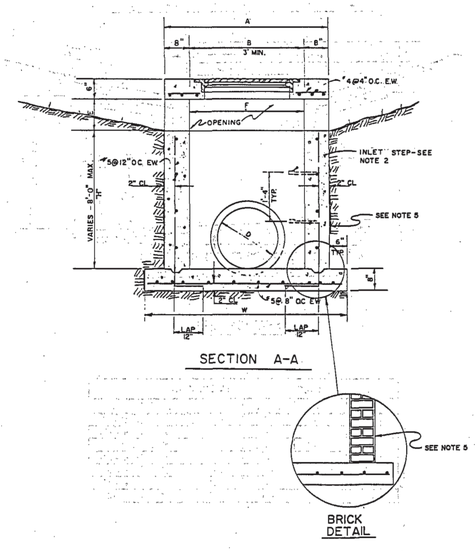

SECTION A-A

BRICK DETAIL

REVISIONS			CITY OF HUNTSVILLE	
DESCRIPTION	NAME	DATE	OPEN THROAT INLET DETAIL	
DIRECTOR		DATE	ENGINEER OF PUBLIC WORKS CITY OF HUNTSVILLE, ALABAMA	DR-127B DRAWING NO.

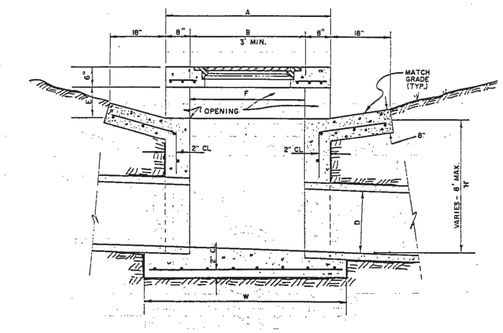

SECTION B-B

INLET DIMENSIONS					
PIPE SIZE	A	B & F	D	E	W
12"	4'-4"	3'	12"	8"	5'-4"
15"	4'-4"	3'	15"	8"	5'-4"
18"	4'-4"	3'	18"	8"	5'-4"
21"	4'-8"	3'-2"	21"	8"	5'-6"
24"	4'-9"	3'-5"	24"	8"	5'-9"
30"	5'-4"	4'	30"	8"	6'-4"
36"	5'-10"	4'-6"	36"	8"	6'-10"

REVISIONS			CITY OF HUNTSVILLE	
DESCRIPTION	NAME	DATE	OPEN THROAT INLET DETAIL	
DIRECTOR		DATE	ENGINEER OF PUBLIC WORKS CITY OF HUNTSVILLE, ALABAMA	DR-127C DRAWING NO.

NOTE:
NOT ALL CITY OF HUNTSVILLE DETAILS ARE SHOWN. THE CONTRACTOR SHALL REFER TO THE CITY OF HUNTSVILLE ENGINEERING STANDARDS FOR THE CONSTRUCTION OF PUBLIC IMPROVEMENTS DATED MAY 1991 AND THE CITY OF HUNTSVILLE ENGINEERING DEPARTMENT "DESIGN AND ACCEPTANCE MANUAL FOR SANITARY SEWERS" DATED MARCH 2011 FOR ADDITIONAL INFORMATION.

LBYD
Civil and Structural Engineers
Birmingham, Alabama
Atlanta, Georgia
Huntsville, Alabama
Tampa Bay, Florida
www.lbyd.com

LBYD Project Number
302-10-002A

LBYD, Inc.
305 Church Street SW
Suite 719
Huntsville, AL 35801
Phone (256) 533-1575
Fax (256) 533-1744

© copyright 2011
These drawings and design intent are the sole property of City of Huntsville which may not be reproduced without written permission.

ALABAMA REGISTERED No. 26754 PROFESSIONAL ENGINEER
8/10/2012

HUNTSVILLE
The Star of Alabama

DETAILS

REDSTONE GATEWAY - PACKAGE I
LAKE F
CITY OF HUNTSVILLE
HUNTSVILLE, ALABAMA

REV	DATE	DRAWN	CHECKED	DESCRIPTION	DATE	TRAFFIC	REAL ESTATE	PE	DRAINAGE
DRAWN: TBE		CHECKED: RAN			DATE: August 10, 2012				

C7.0

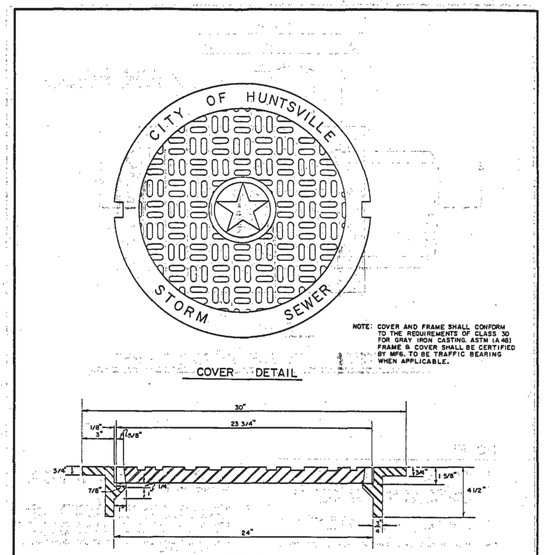

LID DESIGN TO HAVE REDSTONE GATEWAY LOGO.
(SEE EAST JORDAN IRON WORKS DETAIL)

REVISIONS			CITY OF HUNTSVILLE
DESCRIPTION	NAME	DATE	
			RING AND COVER DETAIL
DIRECTOR		DATE	ENGINEER OF PUBLIC WORKS CITY OF HUNTSVILLE, ALABAMA — DR-129 DRAWING NO.

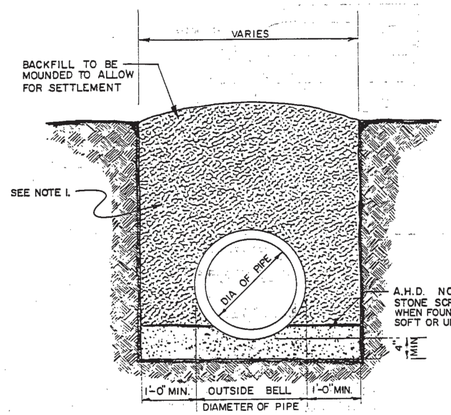

STORM SEWER PIPE BEDDING

NOTE:
1. IN TRAFFIC AREAS USE CRUSHED STONE, DENSE GRADED BASE OR APPROVED CLASS I BACKFILL COMPACTED IN 6" LAYERS TO 95% STANDARD PROCTOR DENSITY UP TO WHERE STREET SUBGRADE REQUIREMENTS DICTATE.

REVISIONS			CITY OF HUNTSVILLE
DESCRIPTION	NAME	DATE	
			TYPICAL STORM SEWER PIPE BEDDING DETAIL
DIRECTOR		DATE	ENGINEER OF PUBLIC WORKS CITY OF HUNTSVILLE, ALABAMA — DR-166 DRAWING NO.

V-1355 ASSEMBLY

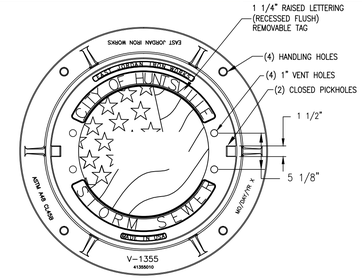

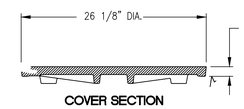

COVER SECTION

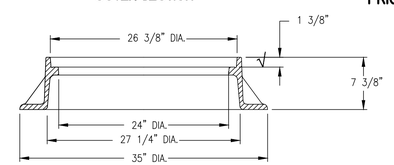

FRAME SECTION

* OR APPROVED EQUAL – CONTRACTOR MUST SUBMITT AN EQUAL SHOP DRAWING PRIOR TO ANY ORDERING OR FABRICATION

PRODUCT NUMBER
41355046A01

DESIGN FEATURES
MATERIALS
COVER-GRAY IRON
ASTM A48 CL35B
FRAME-GRAY IRON
ASTM A48 CL35B
DESIGN LOAD
HEAVY DUTY
COATING
UNDIPPED
OPEN AREA
N/A

√ DESIGNATES MACHINE SURFACE

REFERENCE INFORMATION
41355046
41355010

DRAWING DETAILS
ORIGINAL DRAWING: SMM 01/06/11
REVISED BY: SMM 02/01/11

Corporate Headquarters
301 Spring Street
PO Box 439
East Jordan, MI
49727-0439
800.874.4100

Call Today for More Information
800.626.4653 EJIW EAST JORDAN IRON WORKS EST 1883 WE COVER YOUR INFRASTRUCTURE™
www.ejiw.com MADE IN THE USA

•Weights (lbs./kg.) dimensions (inches/mm., and drawings provided for your guidance.
•We reserve the right to modify specifications without prior notice.

CONFIDENTIAL: This drawing is the property of East Jordan Iron works, Inc., and embodies confidential information, registered marks, trade secret information, and/or know how that is the property of East Jordan Iron Works, Inc. ©Copyright 2009 East Jordan Iron Works, Inc.

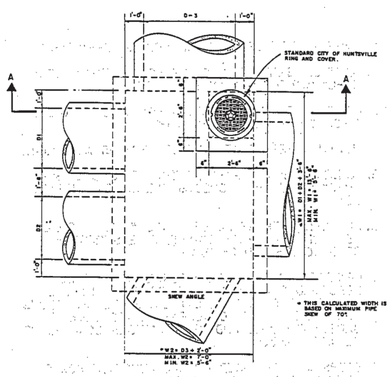

REVISIONS			CITY OF HUNTSVILLE
DESCRIPTION	NAME	DATE	
			JUNCTION BOX (27"-60" PIPES) DETAIL NON-TRAFFIC TYPE
DIRECTOR		DATE	ENGINEER OF PUBLIC WORKS CITY OF HUNTSVILLE, ALABAMA — DR-143A DRAWING NO.

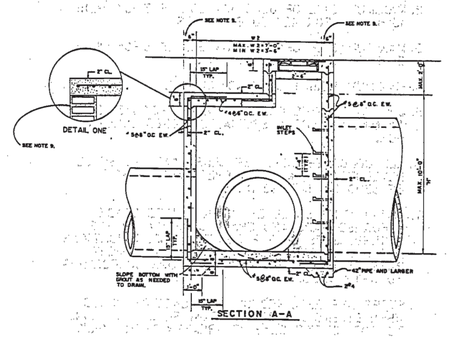

REVISIONS			CITY OF HUNTSVILLE
DESCRIPTION	NAME	DATE	
			JUNCTION BOX (27"-60" PIPES) DETAIL NON-TRAFFIC TYPE
DIRECTOR		DATE	ENGINEER OF PUBLIC WORKS CITY OF HUNTSVILLE, ALABAMA — DR-143B DRAWING NO.

1. MINIMUM SIZE OF JUNCTION BOX IS 2'-6"x2'-6".
2. MAXIMUM SIZE OF JUNCTION BOX IS 7'-0" (W2)x 13'-6" (W1) FOR 42" TO 60" PIPES
3. MAXIMUM SIZE OF JUNCTION BOX IS 5'-0" (W2)x 9'-6"-(W1) FOR 15" TO 36" PIPES
4. MAXIMUM HEIGHT OF JUNCTION BOX IS AS SHOWN.
5. JUNCTION BOXES GREATER THAN 7'-6" x13'-6"x 12'-0" SHALL BE A SPECIAL DESIGNED JUNCTION BOX.
6. ALL CONCRETE SHALL BE CLASS "A" AND SHALL DEVELOP A MINIMUM COMPRESSIVE STRENGTH OF 3500 P.S.I. IN 28 DAYS.
* 7. ~~REINFORCING SHALL BE INTERMEDIATE GRADE DEFORMED BARS AND SHALL CONFORM TO THE REQUIREMENTS OF THE STANDARD SPECIFICATIONS FOR BILLET STEEL CONCRETE REINFORCEMENT BARS, ASTM A-15 AND DEFORMATIONS CONFORMING TO ASTM A-305.~~
8. STEPS ARE REQUIRED ON ALL JUNCTION BOXES WHEN DIMENSION FROM BOTTOM SLAB FLOW LINE TO TOP OF TOP SLAB IS GREATER THAN 4"-0".
9. BRICK CONSTRUCTION _ WALL THICKNESS WILL BE 8" BRICK WHEN "H" IS LESS THAN 5'-0" AND 12" BRICK WHEN "H" IS MORE THAN 5'-0".½" MORTAR ON BOTH SIDES.

* REINFORCEMENT SHALL CONFORM TO THE STANDARD SPECIFICATIONS FOR DEFORMED AND PLAIN BILLET STEEL BARS FOR CONCRETE REINFORCEMENT (ASTM A 615)

REVISIONS			CITY OF HUNTSVILLE
DESCRIPTION	NAME	DATE	
			GENERAL NOTES FOR NON-TRAFFIC TYPE JUNCTION BOXES
DIRECTOR		DATE	ENGINEER OF PUBLIC WORKS CITY OF HUNTSVILLE, ALABAMA — DR-143C DRAWING NO.

NOTE:
NOT ALL CITY OF HUNTSVILLE DETAILS ARE SHOWN. THE CONTRACTOR SHALL REFER TO THE CITY OF HUNTSVILLE ENGINEERING STANDARDS FOR THE CONSTRUCTION OF PUBLIC IMPROVEMENTS DATED MAY 1991 AND THE CITY OF HUNTSVILLE ENGINEERING DEPARTMENT "DESIGN AND ACCEPTANCE MANUAL FOR SANITARY SEWERS" DATED MARCH 2011 FOR ADDITIONAL INFORMATION.

LBYD
Civil and Structural Engineers
Birmingham, Alabama
Atlanta, Georgia
Huntsville, Alabama
Tampa Bay, Florida
www.lbyd.com

LBYD Project Number
302-10-002A

LBYD, Inc.
305 Church Street SW
Suite 719
Huntsville, AL 35801
Phone (256) 533-1575
Fax (256) 533-1744

© copyright 2011
These drawings and design intent are the sole property of City of Huntsville which may not be reproduced without written permission.

ALABAMA REGISTERED No. 26754 PROFESSIONAL ENGINEER
8/10/2012

HUNTSVILLE The Star of Alabama

DETAILS

REDSTONE GATEWAY - PACKAGE I
LAKE F
CITY OF HUNTSVILLE
HUNTSVILLE, ALABAMA

REV	DATE	DRAWN	CHECKED	DESCRIPTION	TRAFFIC	REAL ESTATE	CONS. ENGINEER	PE	DRAINAGE
DRAWN: TBE		CHECKED: RAN		DATE: August 10, 2012					

C7.1

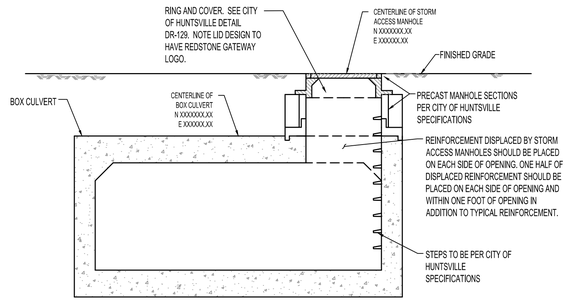

STORM ACCESS MANHOLE

N.T.S.

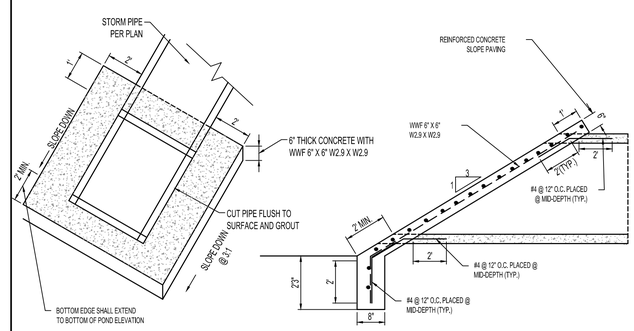

Box Culvert Slope Paved Headwall

N.T.S.

NOTE:
1. 2 FT MIN. KEY DEPTH AT TOE; TIP KEY 1 FT NOMINAL OR 4% INTO SLOPE.
2. FILL SLOPE SHALL BE OVERFILLED & CUT BACK TO 2:1 TO ACHIEVE ADEQUATE COMPACTION AT THE FACE OF SLOPE.

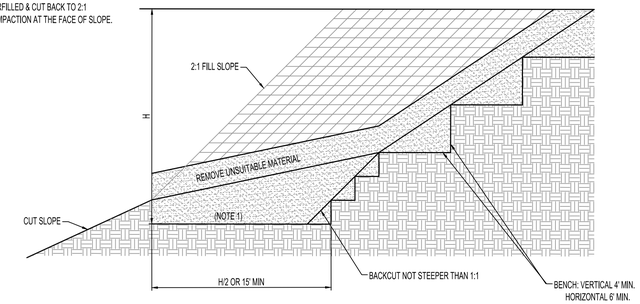

Fill Over Cut Slope Detail

N.T.S.

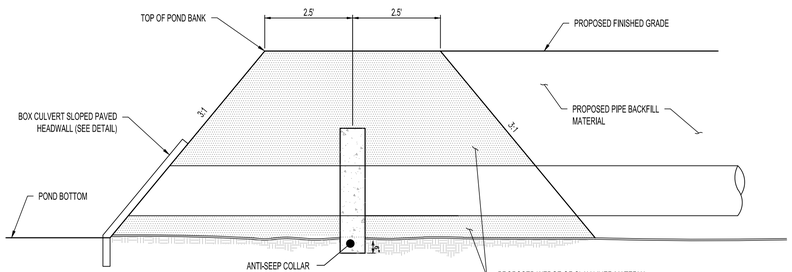

* CONTRACTOR SHALL INSTALL RETENTION POND EARTH PLUG AT ALL STORM PIPE PENETRATIONS INTO PONDS. EARTH PLUG SHALL BE INSTALLED FIRST THEN EXCAVATED FOR PIPE AND COLLAR INSTALLATION. EXCAVATED EARTH PLUG MATERIAL SHALL BE BACKFILLED IN PIPE TRENCH UPON COMPLETION OF PIPE INSTALLATION.

* CONTRACTOR SHALL LOCATE ANTI-SEEP COLLAR AT THE PIPE JOINT CLOSEST TO SHOWN LOCATION. JOINT MUST BE LOCATED WITHIN PLUG WEDGE.

RETENTION POND EARTH PLUG

N.T.S.

* ANTI-SEEP COLLAR TO BE KEYED INTO CONCRETE BOX CULVERTS.

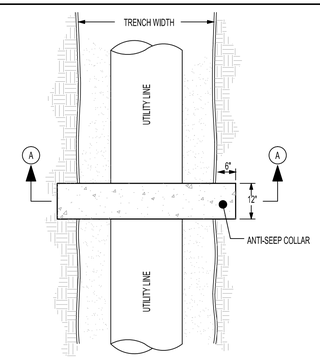

PLAN VIEW

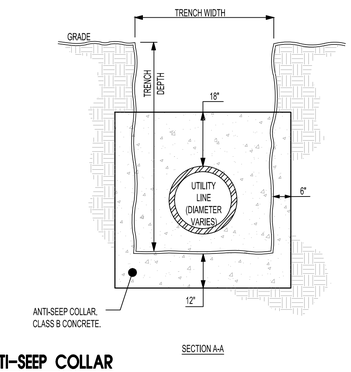

SECTION A-A

ANTI-SEEP COLLAR

N.T.S.

SEE SHEET C7.5 FOR
OUTLET CONTROL STRUCTURE DETAIL

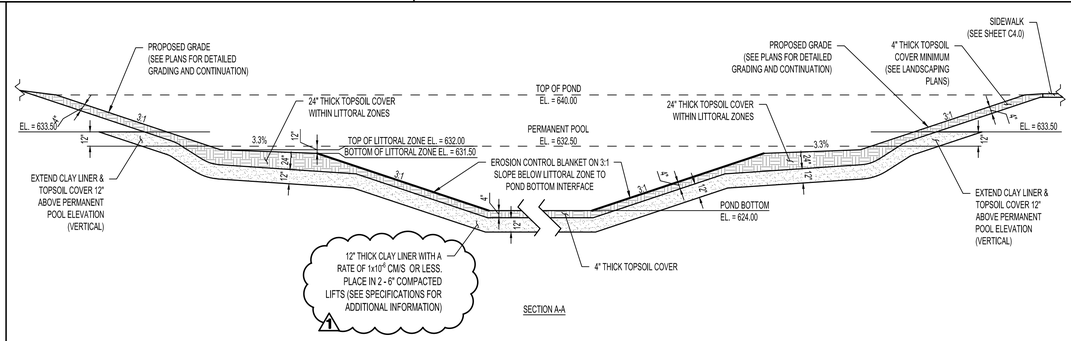

SECTION A-A

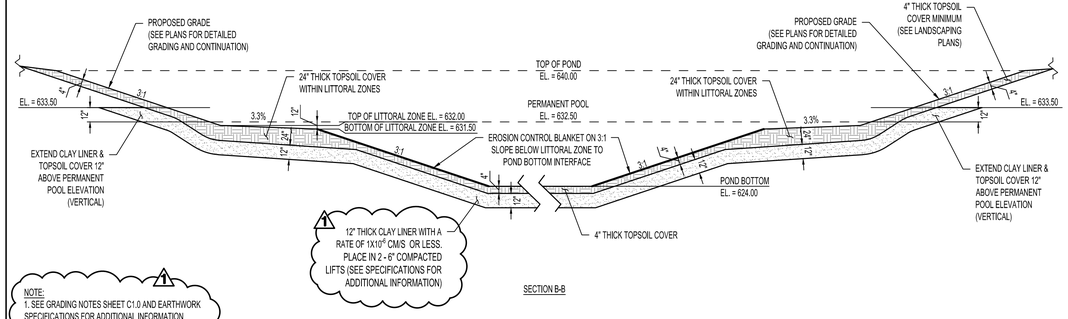

SECTION B-B

NOTE:
1. SEE GRADING NOTES SHEET C1.0 AND EARTHWORK SPECIFICATIONS FOR ADDITIONAL INFORMATION REGARDING POND LINER SOILS, COMPACTION RATES, MOISTURE CONTENT, AND TESTING PROCEDURES.

POND LINER & COVER

N.T.S.

LBYD
Civil and Structural Engineers
Birmingham, Alabama
Atlanta, Georgia
Huntsville, Alabama
Tampa Bay, Florida
www.lbyd.com

LBYD Project Number
302-10-002A

LBYD, Inc.
305 Church Street SW
Suite 719
Huntsville, AL 35801
Phone (256) 533-1575
Fax (256) 533-1744

© copyright 2011
These drawings and design intent are the sole property of City of Huntsville which may not be reproduced without written permission.

ALABAMA REGISTERED No. 26754 PROFESSIONAL ENGINEER
1/21/2013

HUNTSVILLE
The Star of Alabama

DETAILS

REDSTONE GATEWAY - PACKAGE I
LAKE F
CITY OF HUNTSVILLE
HUNTSVILLE, ALABAMA

REV	DATE	DRAWN	CHECKED	DESCRIPTION	TRAFFIC	REAL ESTATE	CONT. REVIEW	PE	DRAINAGE
1	1/21/13	AES	RAN	PKG. I - 1 COMMENTS					

DRAWN: TBE
CHECKED: RAN
DATE: August 10, 2012

C7.2-R1

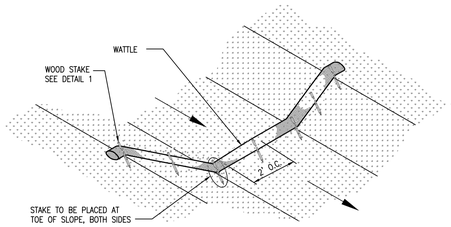

Wattle Spacing

REFER TO ALDOT SPECIAL DRAWING NO. ESC-300
FOR RECOMMENDED PLACEMENT INTERVAL BETWEEN WATTLES

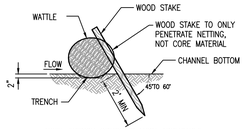

NOTE: TRENCH OPTION IS MOST APPLICABLE
IN LOOSE, UNCONSOLIDATED SOILS

STAKE DETAIL 1
(WITH TRENCH)

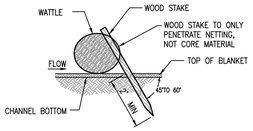

STAKE DETAIL 2
(NO TRENCH)

CdW Wattle Check Dam

N.T.S.

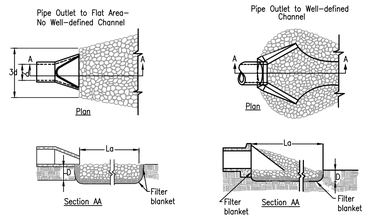

SPECIAL NOTES:
1. RIP RAP DISCHARGE APRON SHALL BE INSTALLED AT A ZERO SLOPE.
2. A FILTER BLANKET OR FILTER FABRIC SHOULD BE INSTALLED BETWEEN THE RIPRAP AND SOIL FOUNDATION.
3. DEPTH OF APRON SHALL BE NO LESS THAN 6".
4. FOR DETERMINING APRON LENGTH, WIDTH, AND MEDIAN STONE SIZE, REFER TO FIGURES OP-2 AND OP-3 FROM THE LATEST ALABAMA EROSION CONTROL HANDBOOK.
5. THE GRADATION OF RIPRAP SHALL BE PER TABLES OP-2 AND OP-3 FROM THE LATEST ALABAMA EROSION CONTROL HANDBOOK.
6. SEE TABLE FOR LENGTH AND STONE SEIZES.

1

OUTLET PROTECTION INFORMATION		
STR	La	d50
1B	10	0.3
1C	10	0.5
1D	10	0.3
1E	5	0.2
1F	25	0.5
1H	10	0.25
1J	20	0.25
1K	10	0.3
1L	10	0.3
1M	10	0.3

OP Outlet Protection

N.T.S.

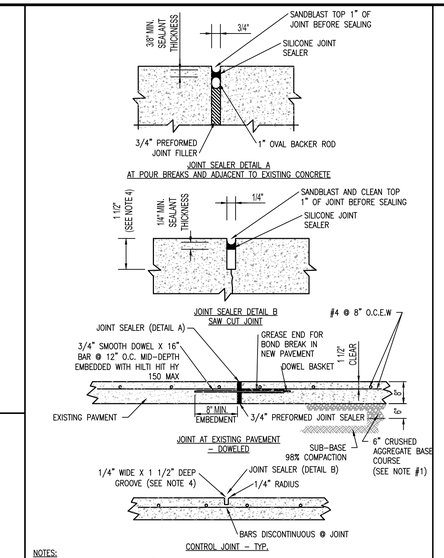

NOTES:
1. CONTRACTOR SHALL INSTALL 6" OF CRUSHED AGGREGATE BASE COURSE, TYPE B (ALDOT 825) UNDER ALL CONCRETE PAVING ON SUB-BASE WITH TOP 12 INCHES – 98% COMPACTION (ASTM D-698)
2. CONCRETE SHALL HAVE 4000 PSI AT 28 DAYS
3. CONTRACTOR SHALL INSTALL CONTROL JOINTS IN CONCRETE PAVING AT 16' MAX SPACING BOTH WAYS UNLESS OTHERWISE NOTED.
4. CONTROL JOINT TO BE 1/4 OF THE SLAB THICKNESS TYPICALLY.
5. EXPANSION JOINTS AT POUR BREAKS AND 100' MAX SPACING. COORDINATE WITH CONTROL JOINTS.
6. PAVING DESIGNED MEETS OR EXCEETS AASHTO HS-20 LOADING.

Concrete Paving Detail

N.T.S.

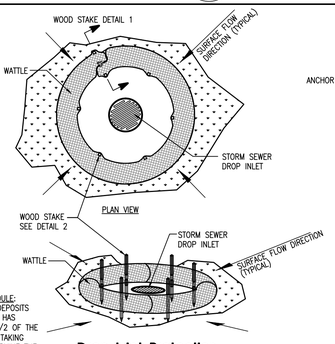

Drop Inlet Protection

MAINTENANCE SCHEDULE:
REMOVE SEDIMENT DEPOSITS PROMPTLY AFTER IT HAS ACCUMULATED TO 1/2 OF THE ORIGINAL CAPACITY, TAKING CARE NOT TO UNDERMINE THE ENTRENCHED WATTLES. INSPECT PERIODICALLY FOR DETERIORATION OR DAMAGE FROM CONSTRUCTION ACTIVITIES. REPAIR DAMAGED BARRIER IMMEDIATELY.

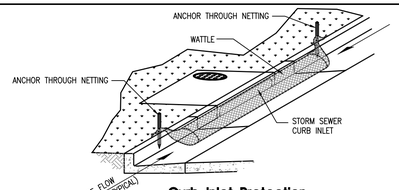

Curb Inlet Protection

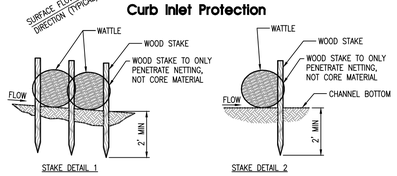

NOTE:
WATTLES MAY BE A STRAW WATTLE, A MULCH WATTLE, OR APPROVED EQUAL. STONE WATTLES SHALL BE USED FOR CURB INLETS ADJACENT TO PAVING.

WIP Wattle Inlet Protection

N.T.S.

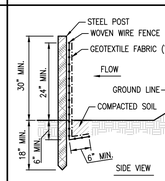

SPECIAL NOTES:
1. SILT FENCE FABRIC SHALL BE PER TABLE SB-1 FROM THE LATEST ALABAMA EROSION CONTROL HANDBOOK.
2. USE D.O.T. APPROVED WOVEN WIRE FENCE.
3. USE 4' MIN. STEEL POSTS (1.3 LB/FT MIN.).

NOTES:
1. THE WOVEN WIRE FENCING SHALL BE FASTENED TO THE UPSTREAM SIDE OF POSTS BY STAPLES OR WIRE TIES.
2. GEOTEXTILE FABRIC SHALL BE SECURELY FASTENED TO THE WOVEN WIRE FENCING.

MAINTENANCE SCHEDULE:
REMOVE SEDIMENT DEPOSITS WHEN THEY REACH A DEPTH OF 15" OR 1/2 THE HEIGHT OF THE FENCE AS INSTALLED TO PROVIDE ADEQUATE STORAGE VOLUME FOR THE NEXT RAIN AND TO REDUCE PRESSURE ON THE FENCE. SHOULD THE FABRIC OF SILT FENCE COLLAPSE, TEAR, DECOMPOSE OR BECOME INEFFECTIVE, REPLACE IT PROMPTLY.

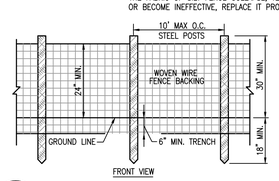

SB Silt Fence – Type A

N.T.S.

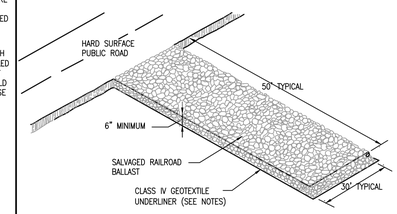

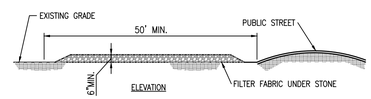

SPECIAL NOTES :

1. A STABILIZED PAD OF CRUSHED STONE SPREAD OVER FILTER FABRIC SHALL BE LOCATED WHERE TRAFFIC WILL BE ENTERING OR LEAVING A CONSTRUCTION SITE TO OR FROM A PUBLIC STREET. THE STONE SHALL BE SALVAGED BALLAST FROM RAILROAD DEMOLITION, FILTER FABRIC SHALL BE NONWOVEN GEOTEXTILE CLASS IV OR EQUAL.
2. THE ENTRANCE SHALL BE MAINTAINED IN A CONDITION WHICH WILL PREVENT TRACKING OR FLOWING OF SEDIMENT ONTO PUBLIC STREETS OR EXISTING PAVEMENT. THIS MAY REQUIRE PERIODIC TOP DRESSING WITH ADDITIONAL STONE AS CONDITIONS DEMAND AND REPAIR AND/OR CLEANOUT OF ANY MEASURES USED TO TRAP SEDIMENT.
3. ALL SEDIMENT SPILLED, DROPPED, WASHED OR TRACKED ONTO PUBLIC STREETS MUST BE REMOVED IMMEDIATELY BY STREET CLEANING (NOT FLUSHING). WHEN NECESSARY, WHEELS MUST BE CLEANED TO REMOVE SEDIMENT PRIOR TO ENTERING A PUBLIC STREET. WHEN WASHING IS REQUIRED, IT SHALL BE DONE ON AN AREA STABILIZED WITH CRUSHED STONE WHICH DRAINS INTO AN APPROVED SEDIMENT BASIN.
4. IF THE PAD SLOPE TOWARDS THE ROAD EXCEEDS 2%, A DIVERSION RIDGE 6" – 8" HIGH WITH 3:1 SIDE SLOPES MUST BE CONSTRUCTED ACROSS THE FOUNDATION APPROXIMATELY 15' AWAY FROM THE ROAD AND DRAIN INTO A SEDIMENT TRAP OR BASIN.

CEP Construction Exit Pad

N.T.S.

NOTE:
1.STABLE OUTLETS SHALL BE PROVIDED FOR EACH DIVERSION.

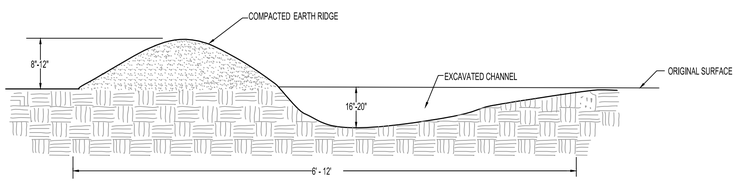

Di Temporary Diversion Berm

N.T.S.

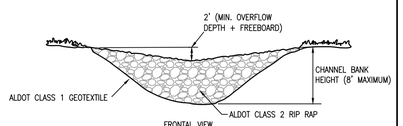

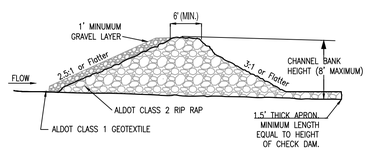

Rd Rock Filter Dam

N.T.S.

SEE SHEET C7.6 FOR
JUNCTION BOX DETAIL - STR #2J

LBYD
Civil and Structural Engineers
Birmingham, Alabama
Atlanta, Georgia
Huntsville, Alabama
Tampa Bay, Florida
www.lbyd.com

LBYD Project Number
302-10-002A

LBYD, Inc.
305 Church Street SW
Suite 719
Huntsville, AL 35801
Phone (256) 533-1575
Fax (256) 533-1744

© copyright 2011
These drawings and design intent are the sole property of City of Huntsville which may not be reproduced without written permission.

ALABAMA REGISTERED No. 26754 PROFESSIONAL ENGINEER
1/21/2013

HUNTSVILLE
The Star of Alabama

DETAILS

REDSTONE GATEWAY - PACKAGE I
LAKE F
CITY OF HUNTSVILLE
HUNTSVILLE, ALABAMA

REV	DATE	DRAWN	CHECKED	DESCRIPTION	TRAFFIC	REAL ESTATE	PVC	DRAINAGE
1	1/21/13	AES	RAN	PKG I – I COMMENTS				

DRAWN: TBE
CHECKED: RAN
DATE: August 10, 2012
CON ROUTER

C7.3-R1

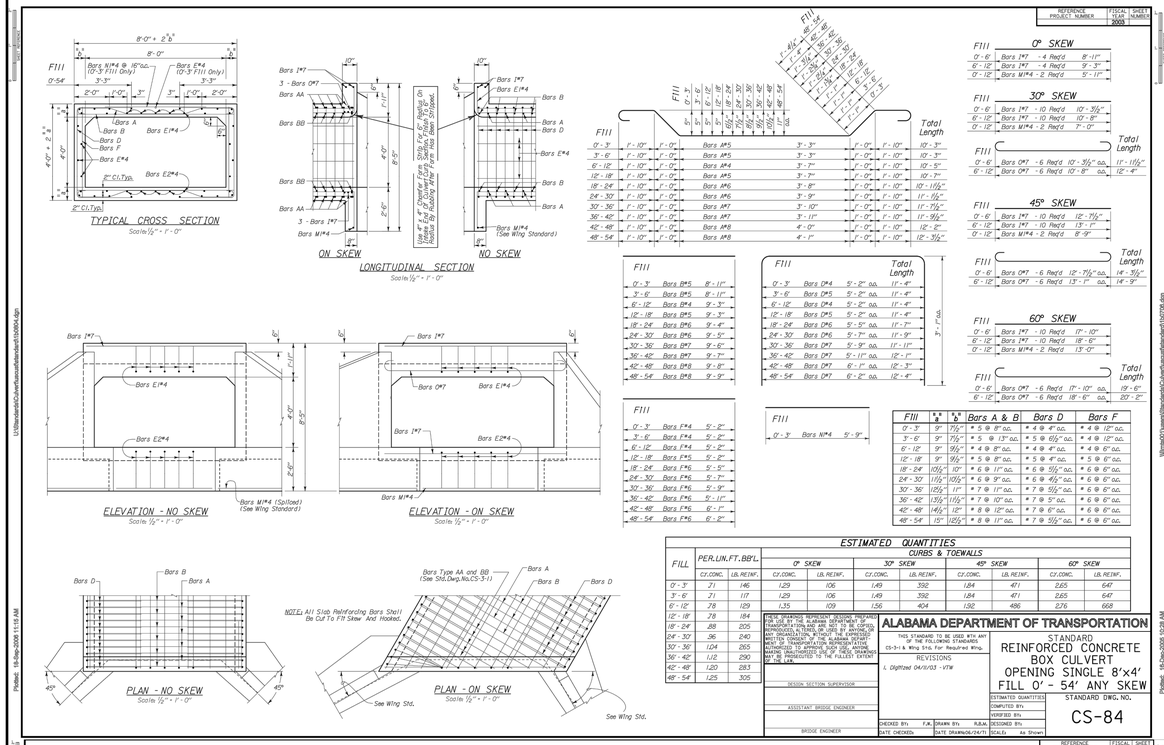

FILL	PER.UN.FT.BRL. CY.CONC.	PER.UN.FT.BRL. LB.REINF.	0° SKEW CY.CONC.	0° SKEW LB.REINF.	30° SKEW CY.CONC.	30° SKEW LB.REINF.	45° SKEW CY.CONC.	45° SKEW LB.REINF.	60° SKEW CY.CONC.	60° SKEW LB.REINF.
			CURBS & TOEWALLS							
0'-3"	71	146	1.29	106	1.49	392	1.84	411	2.65	647
3'-6"	71	117	1.29	106	1.49	392	1.84	411	2.65	647
6'-12"	78	129	1.35	109	1.56	404	1.92	486	2.76	668
12'-18"	78	184								
18'-24"	88	205								
24'-30"	96	240								
30'-36"	104	265								
36'-42"	112	290								
42'-48"	120	283								
48'-54"	125	305								

ESTIMATED QUANTITIES

THESE DRAWINGS REPRESENT DESIGNS PREPARED FOR USE BY THE ALABAMA DEPARTMENT OF TRANSPORTATION AND ARE NOT TO BE COPIED, REPRODUCED, ALTERED, OR USED BY ANYONE OR ANY ORGANIZATION, WITHOUT THE EXPRESSED WRITTEN CONSENT OF THE ALABAMA DEPARTMENT OF TRANSPORTATION. ANYONE WHO IS NOT AUTHORIZED TO APPROVE SUCH USE, ANYONE MAKING UNAUTHORIZED USE OF THESE DRAWINGS MAY BE PROSECUTED TO THE FULLEST EXTENT OF THE LAW.

DESIGN SECTION SUPERVISOR

ASSISTANT BRIDGE ENGINEER

BRIDGE ENGINEER

ALABAMA DEPARTMENT OF TRANSPORTATION

THIS STANDARD TO BE USED WITH ANY OF THE FOLLOWING STANDARDS:
CS-3-1 & Wing Std. For Required Wing.

REVISIONS
1. Added Fill Heights 08/18/75 - GLL
2. Rev.Relief, 0'-3" Fill 01/28/79 - RJT.
3. Skew Area and Relief, 6/24/80 - GLL
4. Digitized 04/16/03 - VTW

STANDARD
REINFORCED CONCRETE BOX CULVERT
OPENING SINGLE 8'x4'
FILL 0' - 54' ANY SKEW

STANDARD DWG. NO. CS-84

ESTIMATED QUANTITIES COMPUTED BY: GLL; VERIFIED BY: VTW; CHECKED BY: F.K.; DRAWN BY: R.R.M.; DESIGNED BY: ; DATE CHECKED: ; DATE DRAWN: 06/24/75; SCALE: As Shown

REFERENCE PROJECT NUMBER | FISCAL YEAR | SHEET NUMBER 2003

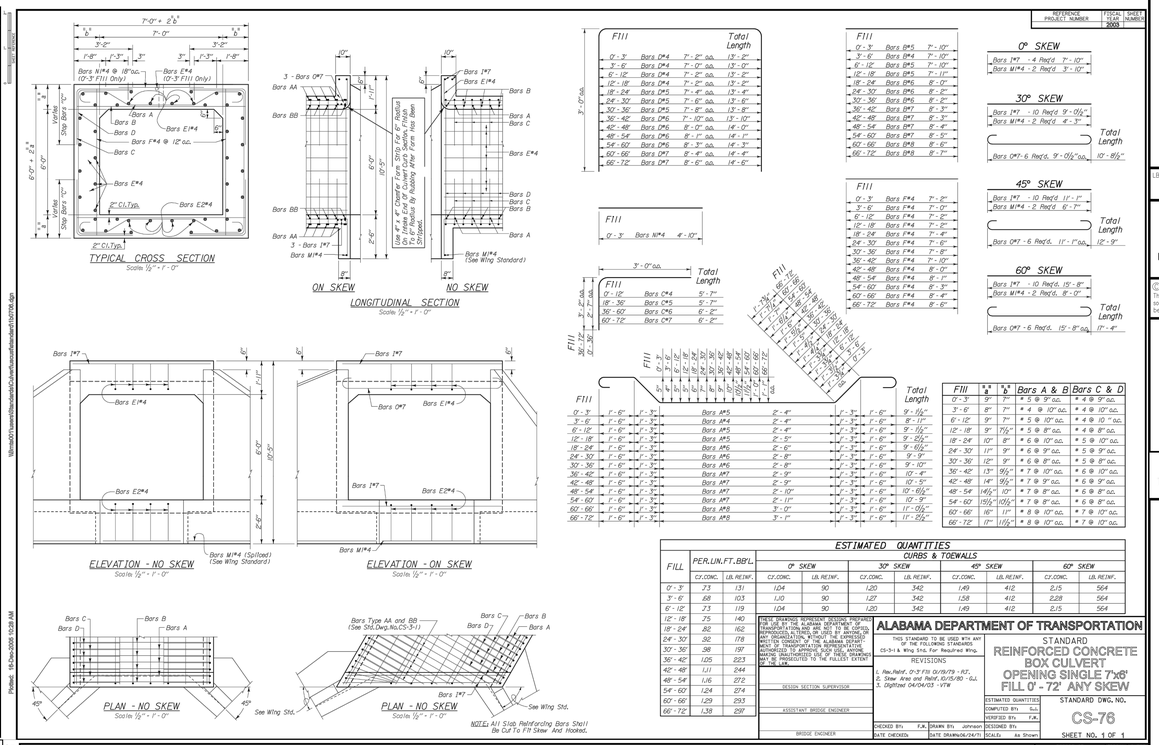

FILL	PER.UN.FT.BRL. CY.CONC.	PER.UN.FT.BRL. LB.REINF.	0° SKEW CY.CONC.	0° SKEW LB.REINF.	30° SKEW CY.CONC.	30° SKEW LB.REINF.	45° SKEW CY.CONC.	45° SKEW LB.REINF.	60° SKEW CY.CONC.	60° SKEW LB.REINF.
			CURBS & TOEWALLS							
0'-3"	73	131	1.04	90	1.20	342	1.49	412	2.15	564
3'-6"	68	103	1.10	90	1.27	342	1.58	412	2.28	564
6'-12"	73	119	1.04	90	1.20	342	1.49	412	2.15	564
12'-18"	75	140								
18'-24"	82	162								
24'-30"	92	178								
30'-36"	98	191								
36'-42"	105	223								
42'-48"	111	244								
48'-54"	116	272								
54'-60"	124	274								
60'-66"	129	293								
66'-72"	138	291								

ESTIMATED QUANTITIES

THESE DRAWINGS REPRESENT DESIGNS PREPARED FOR USE BY THE ALABAMA DEPARTMENT OF TRANSPORTATION AND ARE NOT TO BE COPIED, REPRODUCED, ALTERED, OR USED BY ANYONE OR ANY ORGANIZATION, WITHOUT THE EXPRESSED WRITTEN CONSENT OF THE ALABAMA DEPARTMENT OF TRANSPORTATION. ANYONE WHO IS NOT AUTHORIZED TO APPROVE SUCH USE, ANYONE MAKING UNAUTHORIZED USE OF THESE DRAWINGS MAY BE PROSECUTED TO THE FULLEST EXTENT OF THE LAW.

DESIGN SECTION SUPERVISOR

ASSISTANT BRIDGE ENGINEER

BRIDGE ENGINEER

ALABAMA DEPARTMENT OF TRANSPORTATION

THIS STANDARD TO BE USED WITH ANY OF THE FOLLOWING STANDARDS:
CS-3-1 & Wing Std. For Required Wing.

REVISIONS
1. Rev.Relief, 0'-3" Fill 01/15/73 - RJT.
2. Skew Area and Relief, 10/15/80 - GLL
3. Digitized 04/04/03 - VTW

STANDARD
REINFORCED CONCRETE BOX CULVERT
OPENING SINGLE 7'x6'
FILL 0' - 72' ANY SKEW

STANDARD DWG. NO. CS-76

SHEET NO. 1 OF 1

ESTIMATED QUANTITIES COMPUTED BY: GLL; VERIFIED BY: F.K.; CHECKED BY: F.K.; DRAWN BY: Johnson; DESIGNED BY: ; DATE CHECKED: ; DATE DRAWN: 04/04/03; SCALE: As Shown

REFERENCE PROJECT NUMBER | FISCAL YEAR | SHEET NUMBER 2003

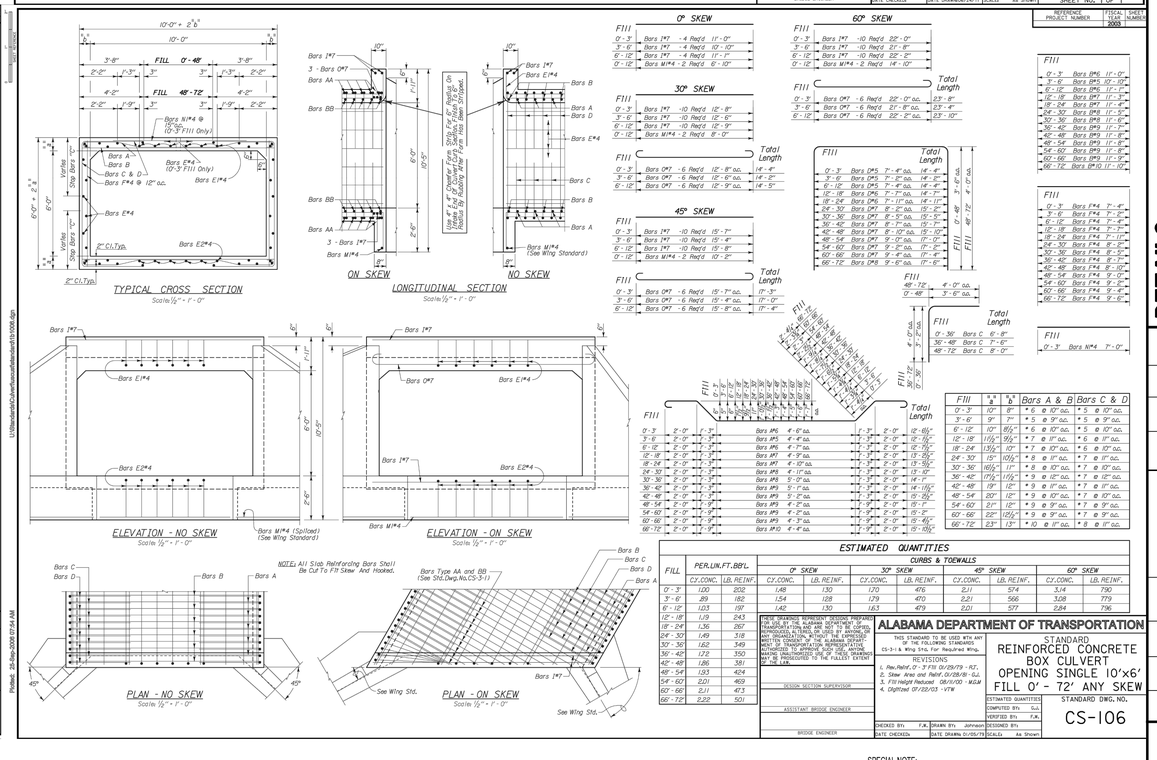

FILL	PER.UN.FT.BRL. CY.CONC.	PER.UN.FT.BRL. LB.REINF.	0° SKEW CY.CONC.	0° SKEW LB.REINF.	30° SKEW CY.CONC.	30° SKEW LB.REINF.	45° SKEW CY.CONC.	45° SKEW LB.REINF.	60° SKEW CY.CONC.	60° SKEW LB.REINF.
			CURBS & TOEWALLS							
0'-3"	120	202	1.48	130	1.70	476	2.11	574	3.14	790
3'-6"	119	182	1.54	128	1.79	470	2.21	566	3.28	779
6'-12"	123	197	1.42	130	1.63	479	2.01	577	2.84	796

ESTIMATED QUANTITIES

THESE DRAWINGS REPRESENT DESIGNS PREPARED FOR USE BY THE ALABAMA DEPARTMENT OF TRANSPORTATION AND ARE NOT TO BE COPIED, REPRODUCED, ALTERED, OR USED BY ANYONE OR ANY ORGANIZATION, WITHOUT THE EXPRESSED WRITTEN CONSENT OF THE ALABAMA DEPARTMENT OF TRANSPORTATION. ANYONE WHO IS NOT AUTHORIZED TO APPROVE SUCH USE, ANYONE MAKING UNAUTHORIZED USE OF THESE DRAWINGS MAY BE PROSECUTED TO THE FULLEST EXTENT OF THE LAW.

DESIGN SECTION SUPERVISOR

ASSISTANT BRIDGE ENGINEER

BRIDGE ENGINEER

ALABAMA DEPARTMENT OF TRANSPORTATION

THIS STANDARD TO BE USED WITH ANY OF THE FOLLOWING STANDARDS:
CS-3-1 & Wing Std. For Required Wing.

REVISIONS
1. Rev.Relief, 0'-3" Fill 01/29/79 - RJT.
2. Skew Area and Relief, 01/28/80 - GLL
3. Fill Height Reduced, 08/01/00 - MGM
4. Digitized 07/22/03 - VTW

STANDARD
REINFORCED CONCRETE BOX CULVERT
OPENING SINGLE 10'x6'
FILL 0' - 72' ANY SKEW

STANDARD DWG. NO. CS-106

ESTIMATED QUANTITIES COMPUTED BY: GLL; VERIFIED BY: F.K.; CHECKED BY: F.K.; DRAWN BY: Johnson; DESIGNED BY: ; DATE CHECKED: ; DATE DRAWN: 01/05/79; SCALE: As Shown

REFERENCE PROJECT NUMBER | FISCAL YEAR | SHEET NUMBER 2003

SPECIAL NOTE:
1. NO WEEP HOLES SHALL BE INSTALLED IN BOX CULVERTS.

LBYD
Civil and Structural Engineers
Birmingham, Alabama
Atlanta, Georgia
Huntsville, Alabama
Tampa Bay, Florida
www.lbyd.com

LBYD Project Number
302-10-002A

LBYD, Inc.
305 Church Street SW
Suite 719
Huntsville, AL 35801
Phone (256) 533-1575
Fax (256) 533-1744

© copyright 2011
These drawings and design intent are the sole property of City of Huntsville which may not be reproduced without written permission.

HUNTSVILLE
The Star of Alabama

DETAILS
REDSTONE GATEWAY - PACKAGE I
LAKE F
CITY OF HUNTSVILLE
HUNTSVILLE, ALABAMA

REV	DATE	DRAWN	CHECKED	DESCRIPTION	DATE	CHECKED	RAN	DRAWN	TBE
				TRAFFIC	August 10, 2012				
				R/W & EASEMENT					
				DRAINAGE					

C7.4
23 OF 26

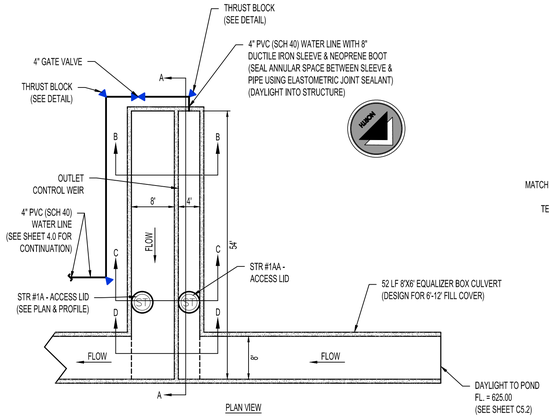

PLAN VIEW

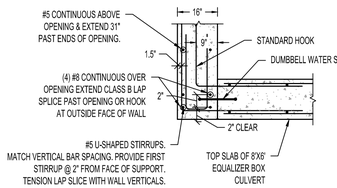

TOP SLAB/WALL JOINT DETAIL

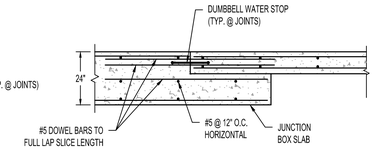

BOTTOM SLAB JOINT DETAIL

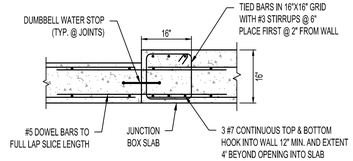

TOP SLAB HEADER DETAIL

TENSION LAP SPLICE LENGTHS				
BAR SIZE	fc = 4000 psi			
	TOP BARS		OTHER BARS	
	A	B	A	B
#3	19"	24"	15"	19"
#4	25"	32"	19"	25"
#5	31"	40"	24"	31"
#6	37"	48"	29"	37"
#7	54"	70"	42"	54"

NOTE:
1. TOP BARS ARE HORIZONTAL REINFORCEMENT WITH MORE THAN 12" OF CONCRETE CAST BELOW THE REINFORCEMENT.
2. ALL LAPS TO BE CLASS B TENSION LAP SPLICES UNLESS OTHERWISE NOTED.

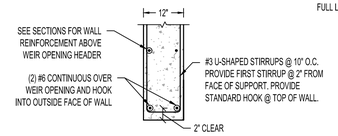

WEIR OPENING HEADER

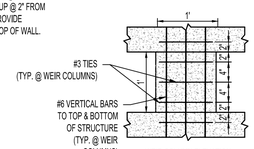

WEIR COLUMN ELEVATION

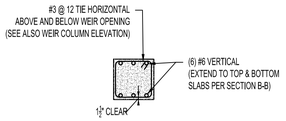

WEIR COLUMN CROSS SECTION

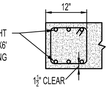

JAMB DETAIL

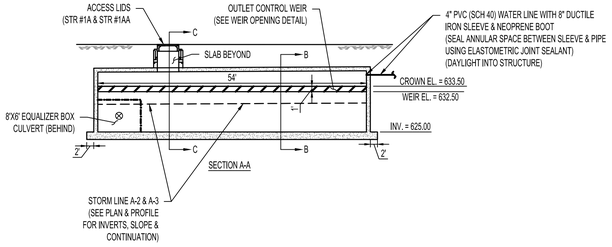

SECTION A-A

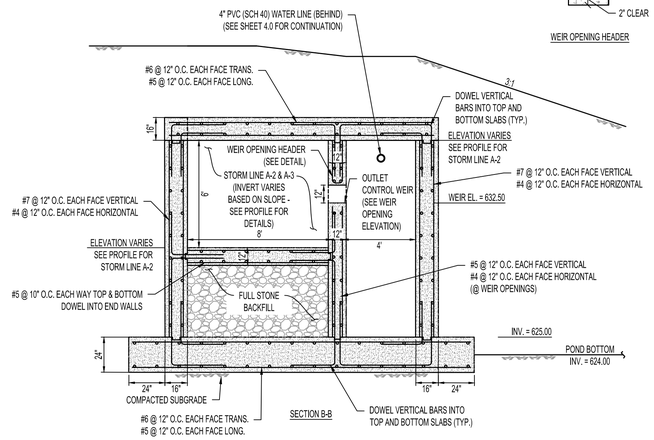

SECTION B-B

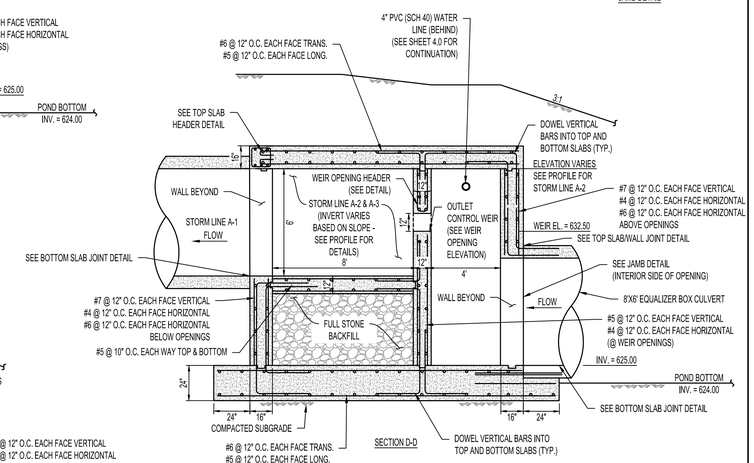

SECTION D-D

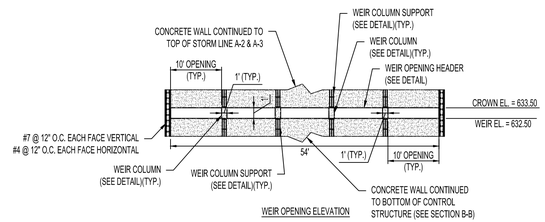

WEIR OPENING ELEVATION

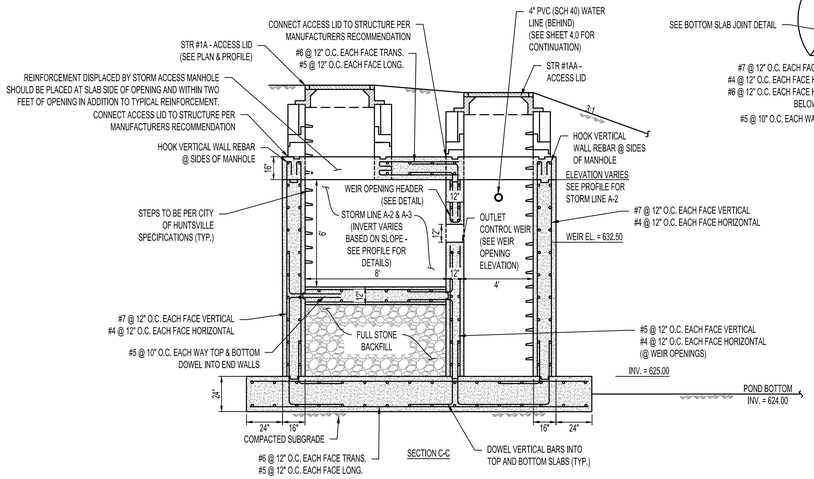

SECTION C-C

OUTLET CONTROL STRUCTURE

N.T.S.

SPECIAL NOTES:
1. CONCRETE TO BE MINIMUM 4000 PSI.
2. TYPICAL OPENING DETAIL TO BE USED FOR REINFORCEMENT ABOVE ALL OPENINGS IN JUNCTION BOX WALLS.
3. FOR CONCRETE CAST AGAINST EARTH, CLEAR COVER TO REINFORCEMENT SHALL BE 3". ALL OTHER CLEAR COVER SHALL BE 2" UNLESS OTHERWISE NOTED.
4. PLACE VERTICAL REINFORCEMENT 2" CLEAR AT FACE OF WALLS THEN PLACE HORIZONTAL REINFORCEMENT.
5. BOX CULVERT DESIGN FOR STORM LINE A-2 & A-3 SHOWN IN THIS DETAIL TO CONTROL OVER ALDOT DETAILS FOR 8'X6' BOX CULVERTS.
6. CONTRACTOR TO PROVIDE DUMBBELL WATER STOPS AT ALL JOINTS. WELD JOINTS PER MANUFACTURER'S INSTRUCTIONS.
7. PROVIDE CORNER BARS SAME SIZE AS HORIZONTAL REINFORCEMENT AT ALL CONTINUOUS CORNERS.
8. CONTRACTOR TO SUBMIT DETAILED SHOP DRAWINGS.

LBYD
Civil and Structural Engineers
Birmingham, Alabama
Atlanta, Georgia
Huntsville, Alabama
Tampa Bay, Florida
www.lbyd.com

LBYD Project Number
302-10-002A

LBYD, Inc.
305 Church Street SW
Suite 719
Huntsville, AL 35801
Phone (256) 533-1575
Fax (256) 533-1744

© copyright 2011
These drawings and design intent are the sole property of City of Huntsville which may not be reproduced without written permission.

ALABAMA REGISTERED No. 26754 PROFESSIONAL ENGINEER
8/10/2012

HUNTSVILLE The Star of Alabama

DETAILS

REDSTONE GATEWAY - PACKAGE I
LAKE F
CITY OF HUNTSVILLE
HUNTSVILLE, ALABAMA

REV	DATE	DRAWN	CHECKED	DESCRIPTION	TRAFFIC	REAL ESTATE	CONT. REVIEW	PE	DRAINAGE
DRAWN:	TBE	CHECKED:	RAN	DATE: August 10, 2012					

C7.5

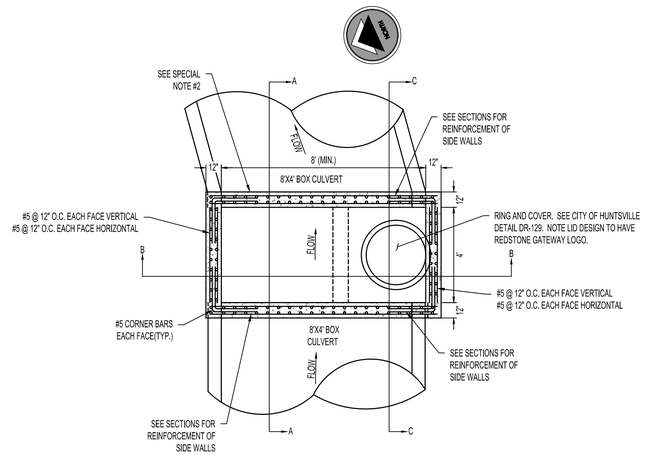

PLAN VIEW

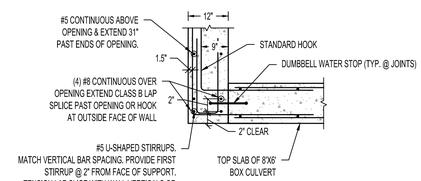

TOP SLAB/WALLS JOINT DETAIL

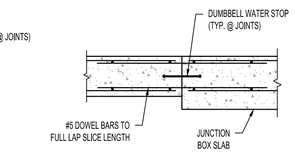

BOTTOM SLAB JOINT DETAIL

TENSION LAP SPLICE LENGTHS				
BAR SIZE	fc = 4000 psi			
	TOP BARS		OTHER BARS	
	A	B	A	B
#3	19"	24"	15"	19"
#4	25"	32"	19"	25"
#5	31"	40"	24"	31"
#6	37"	48"	29"	37"
#7	54"	70"	42"	54"

NOTE:
1. TOP BARS ARE HORIZONTAL REINFORCEMENT WITH MORE THAN 12" OF CONCRETE CAST BELOW THE REINFORCEMENT.
2. ALL LAPS TO BE CLASS B TENSION LAP SPLICES UNLESS OTHERWISE NOTED.

SPECIAL NOTES:
1. CONCRETE TO BE MINIMUM 4000 PSI.
2. TYPICAL OPENING DETAIL TO BE USED FOR REINFORCEMENT ABOVE ALL OPENINGS IN JUNCTION BOX WALLS.
3. FOR CONCRETE CAST AGAINST EARTH, CLEAR COVER TO REINFORCEMENT SHALL BE 3". ALL OTHER CLEAR COVER SHALL BE 2" UNLESS OTHERWISE NOTED.
4. PLACE VERTICAL REINFORCEMENT 2" CLEAR AT FACE OF WALLS THEN PLACE HORIZONTAL REINFORCEMENT.
5. BOX CULVERT DESIGN FOR STORM LINE A-2 & A-3 SHOWN IN THIS DETAIL TO CONTROL OVER ALDOT DETAILS FOR 8'X6' BOX CULVERTS.
6. CONTRACTOR TO PROVIDE DUMBBELL WATER STOPS AT ALL JOINTS. WELD JOINTS PER MANUFACTURER'S INSTRUCTIONS.
7. PROVIDE CORNER BARS SAME SIZE AS HORIZONTAL REINFORCEMENT AT ALL CONTINUOUS CORNERS.
8. CONTRACTOR TO SUBMIT DETAILED SHOP DRAWINGS.

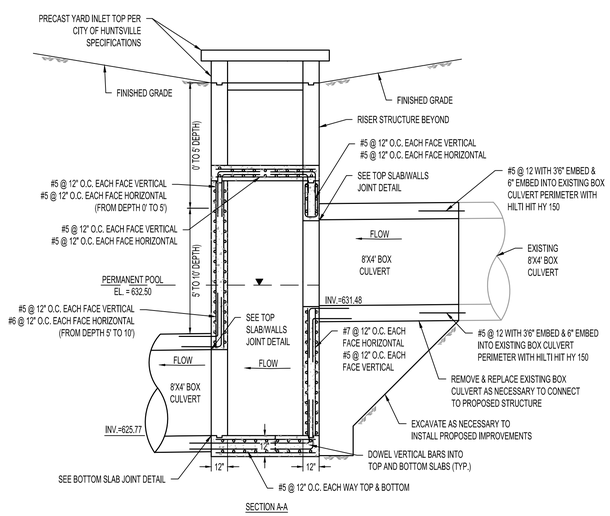

SECTION A-A

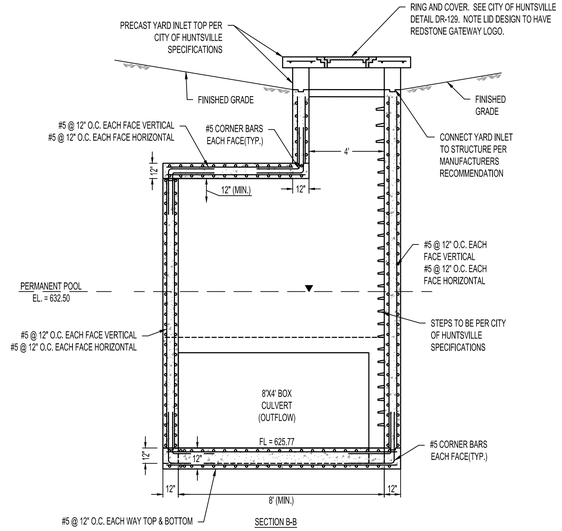

SECTION B-B

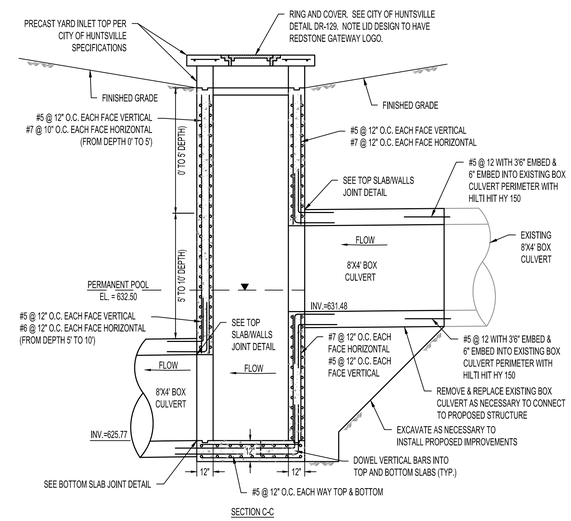

SECTION C-C

JUNCTION BOX DETAIL-STR #2J

N.T.S.

LBYD
Civil and Structural Engineers
Birmingham, Alabama
Atlanta, Georgia
Huntsville, Alabama
Tampa Bay, Florida
www.lbyd.com

LBYD Project Number
302-10-002A

LBYD, Inc.
305 Church Street SW
Suite 719
Huntsville, AL 35801
Phone (256) 533-1575
Fax (256) 533-1744

© copyright 2011
These drawings and design intent are the sole property of City of Huntsville which may not be reproduced without written permission.

ALABAMA REGISTERED No. 26754 PROFESSIONAL ENGINEER
8/10/2012

HUNTSVILLE
The Star of Alabama

DETAILS

REDSTONE GATEWAY - PACKAGE I
LAKE F
CITY OF HUNTSVILLE
HUNTSVILLE, ALABAMA

REV	DATE	DRAWN	CHECKED	DESCRIPTION	DATE	TRAFFIC	REAL ESTATE	PE	DRAINAGE
DRAWN: TBE			CHECKED: RAN		DATE: August 10, 2012		COR REVIEW		

C7.6

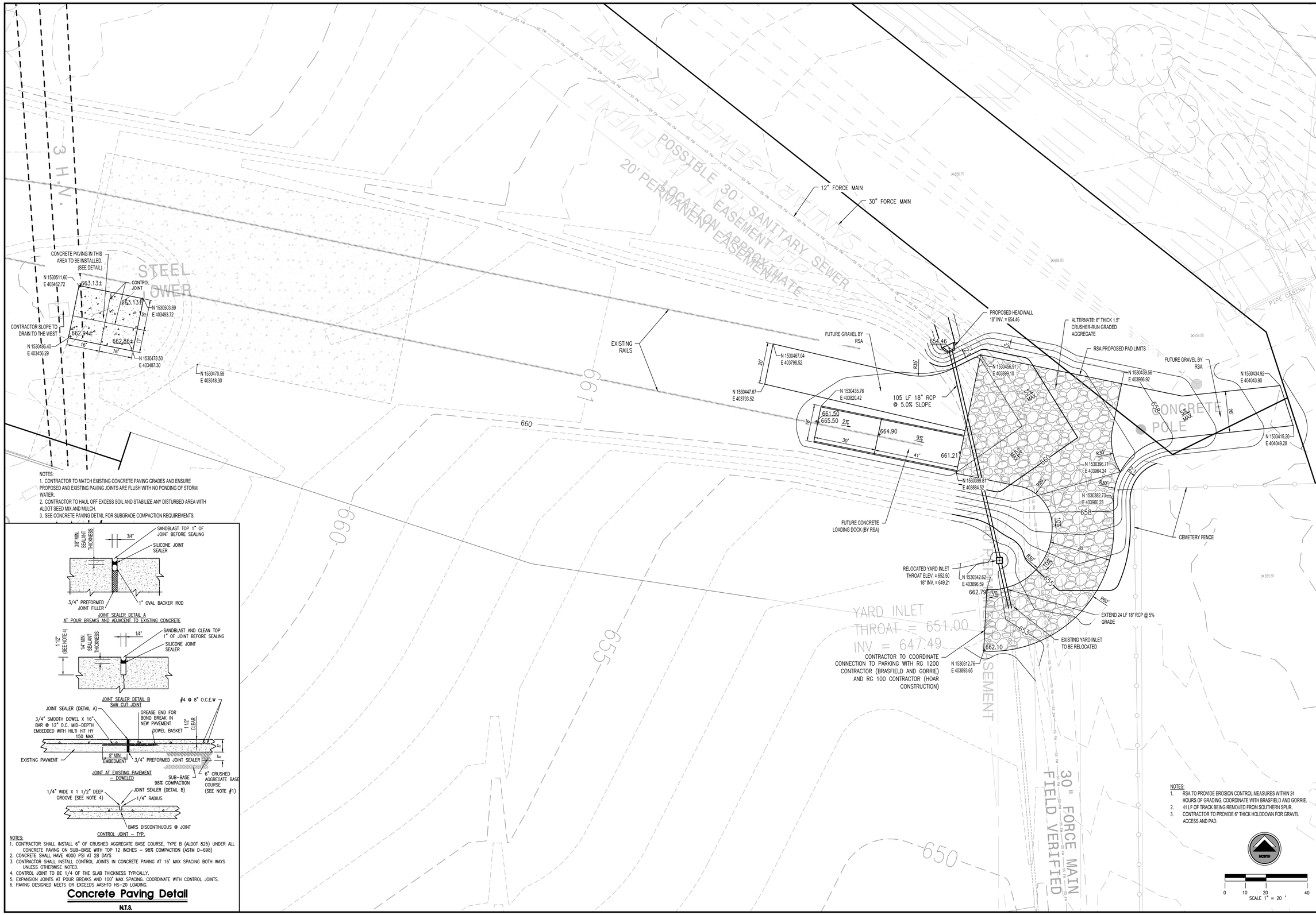

NOTES:
1. CONTRACTOR TO MATCH EXISTING CONCRETE PAVING GRADES AND ENSURE PROPOSED AND EXISTING PAVING JOINTS ARE FLUSH WITH NO PONDING OF STORM WATER.
2. CONTRACTOR TO HAUL OFF EXCESS SOIL AND STABILIZE ANY DISTURBED AREA WITH ALDOT SEED MIX AND MULCH.
3. SEE CONCRETE PAVING DETAIL FOR SUBGRADE COMPACTION REQUIREMENTS.

NOTES:
1. CONTRACTOR SHALL INSTALL 6" OF CRUSHED AGGREGATE BASE COURSE, TYPE B (ALDOT 825) UNDER ALL CONCRETE PAVING ON SUB-BASE WITH TOP 12 INCHES – 98% COMPACTION (ASTM D-698)
2. CONCRETE SHALL HAVE 4000 PSI AT 28 DAYS
3. CONTRACTOR SHALL INSTALL CONTROL JOINTS IN CONCRETE PAVING AT 16' MAX SPACING BOTH WAYS UNLESS OTHERWISE NOTED.
4. CONTROL JOINT TO BE 1/4 OF THE SLAB THICKNESS TYPICALLY.
5. EXPANSION JOINTS AT POUR BREAKS AND 100' MAX SPACING. COORDINATE WITH CONTROL JOINTS.
6. PAVING DESIGNED MEETS OR EXCEEDS AASHTO HS-20 LOADING.

Concrete Paving Detail

N.T.S.

NOTES:
1. RSA TO PROVIDE EROSION CONTROL MEASURES WITHIN 24 HOURS OF GRADING. COORDINATE WITH BRASFIELD AND GORRIE.
2. 41 LF OF TRACK BEING REMOVED FROM SOUTHERN SPUR.
3. CONTRACTOR TO PROVIDE 6" THICK HOLDDOWN FOR GRAVEL ACCESS AND PAD.

LBYD
Civil and Structural Engineers
Birmingham, Alabama
Atlanta, Georgia
Huntsville, Alabama
Tampa Bay, Florida
www.lbyd.com

LBYD Project Number
302-10-002A

LBYD, Inc.
305 Church Street SW
Suite 719
Huntsville, AL 35801
Phone (256) 533-1575
Fax (256) 533-1744

© copyright 2011
These drawings and design intent are the sole property of City of Huntsville which may not be reproduced without written permission.

ALABAMA REGISTERED No. 26754 PROFESSIONAL ENGINEER
1/21/2013

HUNTSVILLE The Star of Alabama

RSA RAILHEAD ACCESS
REDSTONE GATEWAY - PACKAGE I
LAKE F
CITY OF HUNTSVILLE
HUNTSVILLE, ALABAMA

REV	DATE	DRAWN	CHECKED	DESCRIPTION	DATE	TRAFFIC	REAL ESTATE	CONST. REVIEW	PE	DRAINAGE
		TBE	RAN		January 21, 2013					

DRAWN: TBE
CHECKED: RAN

C8.0