CONSTRUCTION PLANS FOR

JOHN HUNT PARK DRAINAGE DESIGN

FOR THE

CITY OF HUNTSVILLE ENGINEERING DIVISION

C.O.H. PROJECT NO. 65-15-SP38

HUNTSVILLE, ALABAMA

AUGUST 2016

HUNTSVILLE

The Star of Alabama

APPENDIX "A"

ALDOT STANDARD DRAWINGS

(DRAWINGS NOT TO SCALE)

REFERENCE PROJECT NUMBER	FISCAL YEAR	SHEET NUMBER

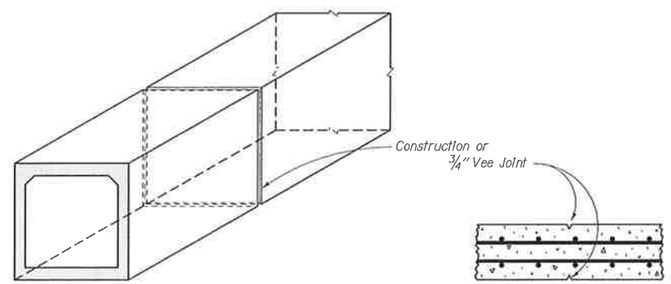

SECTION OF BOX CULVERT

SECTION OF WALL

NOTE

A 3/4" Vee Joint is equivalent to and can be used instead of a Construction Joint for box culvert construction. The term Joint shall refer to either and shall be determined by the Project Engineer.

No Joint is required for box culverts up to 60 ft. long. Box culverts 60 ft. to 90 ft. long require one (1) joint, 90 ft. to 135 ft. two (2) joints, and 135 ft. to 170 ft. three (3) joints. For box culverts over 170 ft. long place joints at approximate equal intervals of not less than 40 ft. nor more than 55 ft. The joints shall be normal to the centerline of the box culvert with longitudinal reinforcing extending through the joint. Use no key or expansion material in joints.

VEE OR CONSTRUCTION JOINT

GENERAL NOTES

SPECIFICATIONS: Current Alabama Standard Specifications For Highway Construction.

DESIGN LOADING: A.A.S.H.T.O., H15-44 to HS20-44.

CONCRETE: Culvert Concrete.

QUANTITIES: Length of barrel is measured out to out of curbs for quantities.

CONSTRUCTION: The bottom slab shall be placed and allowed to set before the remainder of the culvert is constructed. The walls shall be carried up four to six inches monolithic with the base. Construction joints in the walls shall be carefully made, well bonded and waterproof.

WEEPHOLES: Weepholes shall be provided as follows: (1) They shall be spaced along ℄ of barrels in the top of the slab 4'-0" from the curb and 5'-0" ± o.c. between and shall be covered with rough stones or concrete blocks grooved to permit water seepage. (2) Weepholes shall be placed in the side walls and wing walls at a maximum spacing of 5'-0" at 1'-0" above flowline elevation or as directed by the Engineer to best drain the backfill. (3) All weepholes shall be 3" ϕ.

STEEL REINFORCEMENT: All reinforcement shall conform to Section 835 of the current Alabama Standard Specifications For Highway Construction. All longitudinal reinforcing steel (bars type "E") shall be spliced 35d.

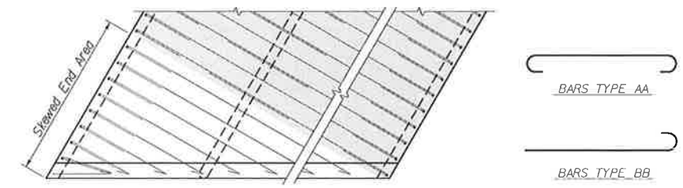

CULVERT PLAN VIEW - ON SKEW

NOTE

Eliminate truss bars (marked "A") and bars marked "B", "N", and "N1" in the "Skewed End Area".
Replace bars "A" with bars type "AA" and bars "B" with bars type "BB" and space at one-half (1/2) the required spacing shown in the Design Box on the Box Culvert Standard Drawing used.

BOX CULVERT SKEWED END AREA

DETAIL FOR FIVE FOOT (5') CONCRETE TOEWALL
FOR BOX CULVERTS AND WINGS

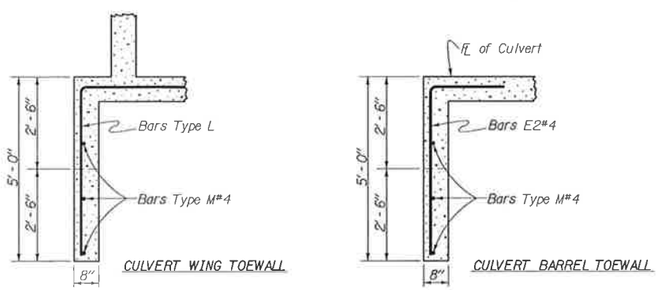

CULVERT WING TOEWALL

CULVERT BARREL TOEWALL

ADDITIONAL SUMMARY QUANTITIES
FOR 5' REINF. CONC. TOEWALL

ADD .... 2'-6" to each bar "E2"
ADD .... 2'-6" to each bar type "L"
ADD ....two (2) each bar type "M"
(Wings and Barrel)

ADD .... 2'-6" to toewall for Concrete

BOX CULVERT CONCRETE TOEWALL EXTENSION

USE WHEN REQUIRED IN CONTRACT PLANS

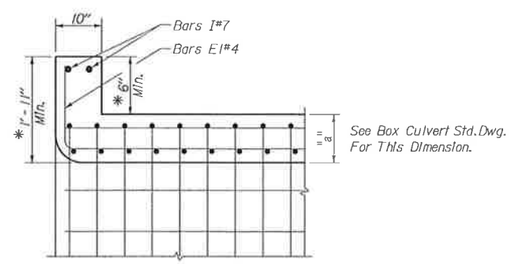

* A minimum height of one foot and eleven inches (1'-11") is required.

If the height of curb above the top of slab is less than six inches (6"), the curb height shall be "a" + 6".

The concrete and steel reinforcement quantities shall be adjusted when the curb height of one foot and eleven inches (1'-11") is increased.

BOX CULVERT CURB DETAIL

DETAIL FOR STEEL SHEET PILE TOEWALL
FOR BOX CULVERTS AND WINGS

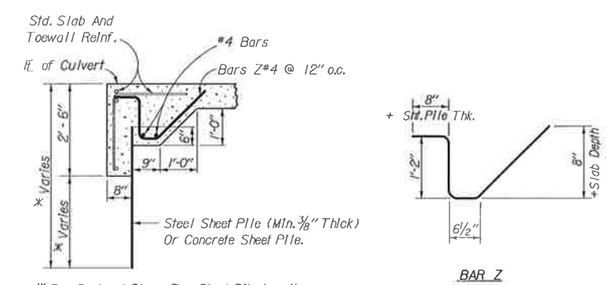

* See Contract Plans For Sheet Pile Length.

BAR Z

BOX CULVERT SHEET PILE TOEWALL EXTENSION

USE WHEN REQUIRED IN CONTRACT PLANS

If sheet pile alternate is chosen by the contractor for construction of the 5 ft. toewall, payment will be made as cubic yards of culvert concrete and pounds of reinforcing steel based on the theoretical quantities for these items required for the concrete toewall alternate.

THESE DRAWINGS REPRESENT DESIGNS PREPARED FOR USE BY THE ALABAMA DEPARTMENT OF TRANSPORTATION, AND ARE NOT TO BE COPIED, REPRODUCED, ALTERED, OR USED BY ANYONE, OR ANY ORGANIZATION, WITHOUT THE EXPRESSED WRITTEN CONSENT OF THE ALABAMA DEPARTMENT OF TRANSPORTATION REPRESENTATIVE AUTHORIZED TO APPROVE SUCH USE. ANYONE MAKING UNAUTHORIZED USE OF THESE DRAWINGS MAY BE PROSECUTED TO THE FULLEST EXTENT OF THE LAW.

DESIGN SECTION SUPERVISOR

ASSISTANT BRIDGE ENGINEER

BRIDGE ENGINEER

ALABAMA DEPARTMENT OF TRANSPORTATION

THIS STANDARD TO BE USED WTH ANY OF THE FOLLOWING STANDARDS

REVISIONS

FHWA APPROVED: 8-25-10

CHECKED BY: R.B.M. DRAWN BY: R.T.

DATE CHECKED: 10-14-05 DATE DRAWN:

STANDARD

GENERAL NOTES AND MISCELLANEOUS DETAILS

ESTIMATED QUANTITIES

COMPUTED BY:

VERIFIED BY:

DESIGNED BY:

SCALE: NONE

STANDARD DWG. NO.

CS-3-1

SHEET NO. 1 OF 1

Q:\StandardsBooks\Culvert\2013 StandardsBook\cs31.dgn
Plotted: 07-Sep-2012 03:49 PM

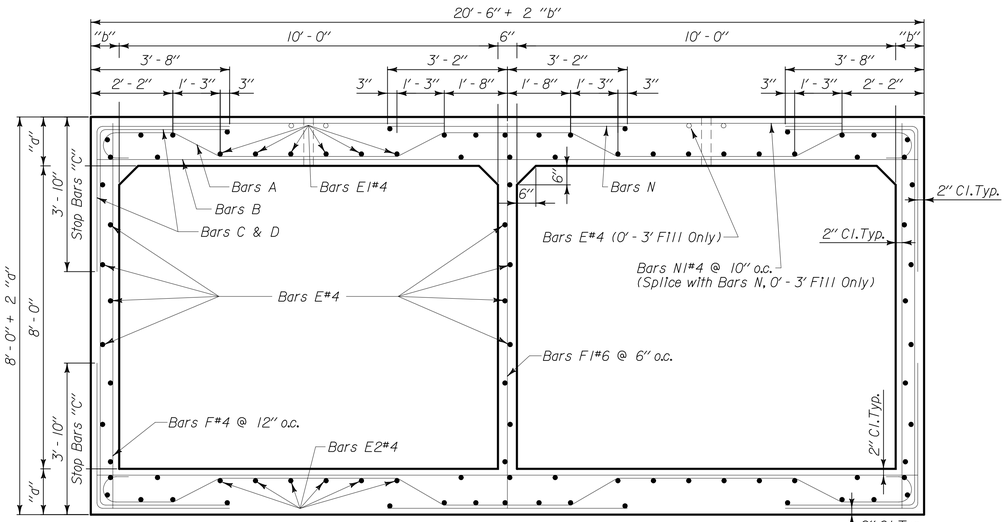

TYPICAL CROSS SECTION

Scale: 1/2" = 1' - 0"

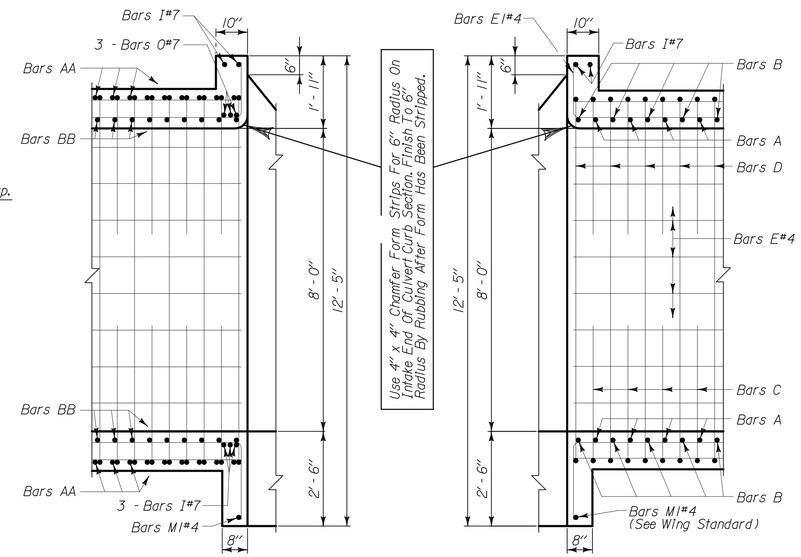

ON SKEW — LONGITUDINAL SECTION — NO SKEW

Scale: 1/2" = 1' - 0"

0° SKEW

F111		
0' - 3'	Bars I#7 - 4 Req'd	21' - 5"
3' - 6'	Bars I#7 - 4 Req'd	21' - 4"
6' - 12'	Bars I#7 - 4 Req'd	21' - 6"
0' - 12'	Bars M1#4 - 2 Req'd	16' - 8"

30° SKEW

F111		
0' - 3'	Bars I#7 - 10 Req'd	24' - 8 1/2"
3' - 6'	Bars I#7 - 10 Req'd	24' - 7 1/2"
6' - 12'	Bars I#7 - 10 Req'd	24' - 10"
0' - 12'	Bars M1#4 - 2 Req'd	19' - 4 1/2"

F111		Total Length
0' - 3'	Bars O#7 - 6 Req'd.	24' - 8 1/2" o.a. 26' - 4 1/2"
3' - 6'	Bars O#7 - 6 Req'd.	24' - 7 1/2" o.a. 26' - 3 1/2"
6' - 12'	Bars O#7 - 6 Req'd.	24' - 10" o.a. 26' - 6"

45° SKEW

F111		
0' - 3'	Bars I#7 - 10 Req'd	30' - 3"
3' - 6'	Bars I#7 - 10 Req'd	30' - 2"
6' - 12'	Bars I#7 - 10 Req'd	30' - 4 1/2"
0' - 12'	Bars M1#4 - 2 Req'd	24' - 2"

F111		Total Length
0' - 3'	Bars O#7 - 6 Req'd.	30' - 3" o.a. 31' - 11"
3' - 6'	Bars O#7 - 6 Req'd.	30' - 2" o.a. 31' - 10"
6' - 12'	Bars O#7 - 6 Req'd.	30' - 4 1/2" o.a. 32' - 0 1/2"

60° SKEW

F111		
0' - 3'	Bars I#7 - 10 Req'd	42' - 10"
3' - 6'	Bars I#7 - 10 Req'd	42' - 8"
6' - 12'	Bars I#7 - 10 Req'd	43' - 0"
12' - 18'	Bars I#7 - 10 Req'd	43' - 2"
0' - 18'	Bars M1#4 - 2 Req'd	35' - 0"

F111		Total Length
0' - 3'	Bars O#7 - 6 Req'd.	42' - 10" o.a. 44' - 6"
3' - 6'	Bars O#7 - 6 Req'd.	42' - 8" o.a. 44' - 4"
6' - 12'	Bars O#7 - 6 Req'd.	43' - 0" o.a. 44' - 8"
12' - 18'	Bars O#7 - 6 Req'd.	43' - 2" o.a. 44' - 10"

F111		
0' - 3'	Bars B#7	21' - 5"
3' - 6'	Bars B#6	21' - 4"
6' - 12'	Bars B#7	21' - 6"
12' - 18'	Bars B#7	21' - 7"
18' - 24'	Bars B#8	21' - 8"
24' - 30'	Bars B#8	21' - 9"
30' - 36'	Bars B#8	21' - 10"
36' - 42'	Bars B#8	21' - 11"

F111		
0' - 3'	Bars F#4	9' - 9"
3' - 6'	Bars F#4	9' - 4"
6' - 12'	Bars F#4	9' - 7"
12' - 18'	Bars F#4	9' - 11"
18' - 24'	Bars F#4	10' - 2"
24' - 30'	Bars F#4	10' - 5"
30' - 36'	Bars F#4	10' - 7"
36' - 42'	Bars F#4	10' - 10"

F111		
0' - 3'	Bars N#7	6' - 4"
3' - 6'	Bars N#6	6' - 4"
6' - 12'	Bars N#7	6' - 4"
12' - 18'	Bars N#7	6' - 4"
18' - 24'	Bars N#8	6' - 4"
24' - 30'	Bars N#8	6' - 4"
30' - 36'	Bars N#8	6' - 4"
36' - 42'	Bars N#8	6' - 4"

F111		
0' - 3'	Bars F1#6	9' - 9"
3' - 6'	Bars F1#6	9' - 4"
6' - 12'	Bars F1#6	9' - 7"
12' - 18'	Bars F1#6	9' - 11"
18' - 24'	Bars F1#6	10' - 2"
24' - 30'	Bars F1#6	10' - 5"
30' - 36'	Bars F1#6	10' - 7"
36' - 42'	Bars F1#6	10' - 10"

F111		
0' - 3'	Bars N1#4	7' - 0 1/2"

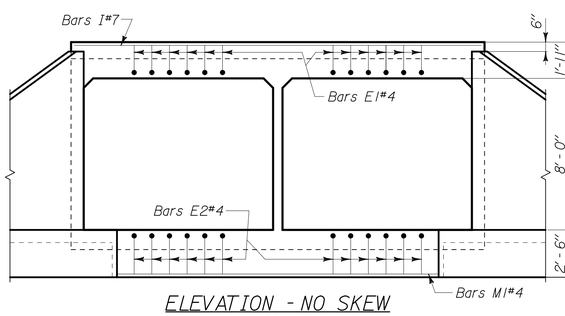

ELEVATION - NO SKEW

Scale: 1/4" = 1' - 0"

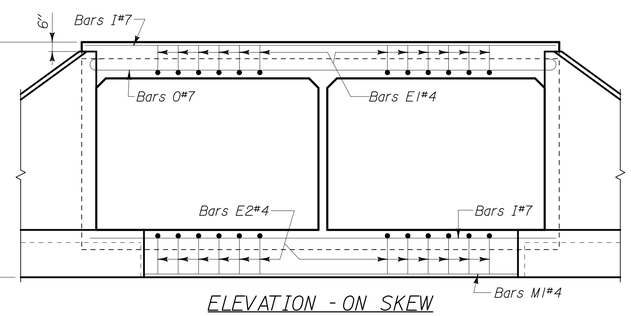

ELEVATION - ON SKEW

Scale: 1/4" = 1' - 0"

F111		Total Length
0' - 3'	Bars D#4	9' - 9" o.a. 16' - 9"
3' - 6'	Bars D#4	9' - 4" o.a. 16' - 4"
6' - 12'	Bars D#5	9' - 7" o.a. 16' - 7"
12' - 18'	Bars D#5	9' - 11" o.a. 16' - 11"
18' - 24'	Bars D#6	10' - 2" o.a. 17' - 2"
24' - 30'	Bars D#6	10' - 5" o.a. 17' - 5"
30' - 36'	Bars D#6	10' - 7" o.a. 17' - 7"
36' - 42'	Bars D#6	10' - 10" o.a. 17' - 10"

3' - 6" o.a.

3' - 8" o.a.

3' - 6" o.a.

F111		Total Length
0' - 6'	Bars C#4	7' - 2"
6' - 18'	Bars C#5	7' - 2"
18' - 42'	Bars C#6	7' - 2"

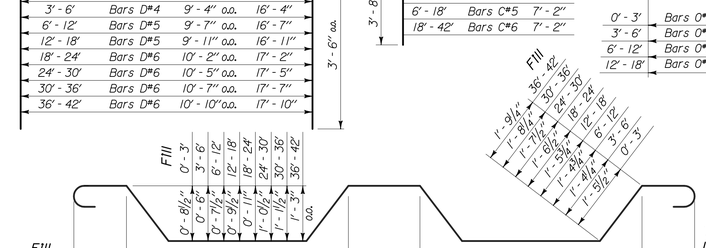

F111													Total Length
0' - 3'	2' - 0"	1' - 3"	Bars A#7	4' - 6 1/2"	1' - 3"	3' - 4"	1' - 3"	4' - 6 1/2"	1' - 3"	2' - 0"	23' - 11"
3' - 6'	2' - 0"	1' - 3"	Bars A#6	4' - 6"	1' - 3"	3' - 4"	1' - 3"	4' - 6"	1' - 3"	2' - 0"	23' - 11"
6' - 12'	2' - 0"	1' - 3"	Bars A#7	4' - 7"	1' - 3"	3' - 4"	1' - 3"	4' - 7"	1' - 3"	2' - 0"	23' - 9"
12' - 18'	2' - 0"	1' - 3"	Bars A#7	4' - 7 1/2"	1' - 3"	3' - 4"	1' - 3"	4' - 7 1/2"	1' - 3"	2' - 0"	24' - 2"
18' - 24'	2' - 0"	1' - 3"	Bars A#8	4' - 8"	1' - 3"	3' - 4"	1' - 3"	4' - 8"	1' - 3"	2' - 0"	24' - 8"
24' - 30'	2' - 0"	1' - 3"	Bars A#8	4' - 8 1/2"	1' - 3"	3' - 4"	1' - 3"	4' - 8 1/2"	1' - 3"	2' - 0"	25' - 1"
30' - 36'	2' - 0"	1' - 3"	Bars A#8	4' - 9"	1' - 3"	3' - 4"	1' - 3"	4' - 9"	1' - 3"	2' - 0"	25' - 5"
36' - 42'	2' - 0"	1' - 3"	Bars A#8	4' - 9 1/2"	1' - 3"	3' - 4"	1' - 3"	4' - 9 1/2"	1' - 3"	2' - 0"	25' - 10"

FILL	"a"	"b"	Bars A,B & N	Bars C & D
0' - 3'	12 1/2"	7 1/2"	• 7 @ 10" o.c.	• 4 @ 10" o.c.
3' - 6'	10"	7"	• 6 @ 11" o.c.	• 4 @ 11" o.c.
6' - 12'	11 1/2"	8"	• 7 @ 12" o.c.	• 5 @ 12" o.c.
12' - 18'	13 1/2"	8 1/2"	• 7 @ 10" o.c.	• 5 @ 10" o.c.
18' - 24'	15"	9"	• 8 @ 11" o.c.	• 6 @ 11" o.c.
24' - 30'	16 1/2"	9 1/2"	• 8 @ 10" o.c.	• 6 @ 10" o.c.
30' - 36'	17 1/2"	10"	• 8 @ 9" o.c.	• 6 @ 9" o.c.
36' - 42'	19"	10 1/2"	• 8 @ 8" o.c.	• 6 @ 8" o.c.

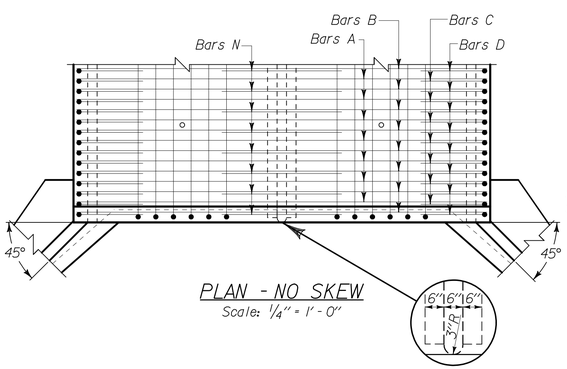

PLAN - NO SKEW

Scale: 1/4" = 1' - 0"

Use 2" x 2" Chamfer Strips For 3" Radius On Intake End Of Interior Wall. Finish To 3" Radius By Rubbing After Form Has Been Stripped.

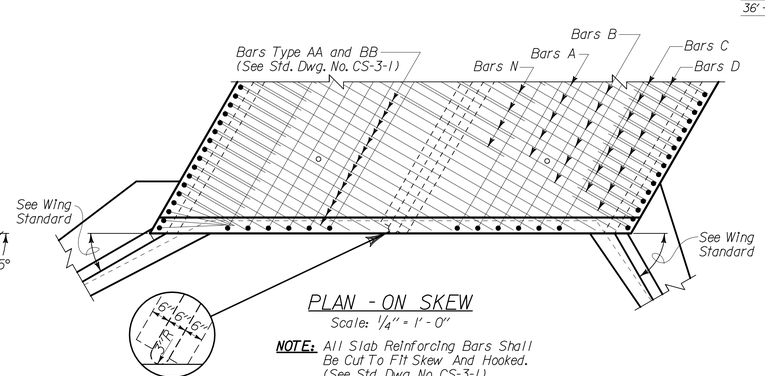

PLAN - ON SKEW

Scale: 1/4" = 1' - 0"

NOTE: All Slab Reinforcing Bars Shall Be Cut To Fit Skew And Hooked. (See Std. Dwg. No. CS-3-1)

ESTIMATED QUANTITIES

CURBS & TOEWALLS

FILL	PER. LIN. FT. BB'L.		0° SKEW		30° SKEW		45° SKEW		60° SKEW	
	C.Y. CONC.	LB. REINF.	C.Y. CONC.	LB. REINF.	C.Y. CONC.	LB. REINF.	C.Y. CONC.	LB. REINF.	C.Y. CONC.	LB. REINF.
0' - 3'	2.22	422	2.48	258	2.87	915	3.54	1103	5.06	1529
3' - 6'	1.85	313	2.94	257	3.40	912	4.18	1100	5.98	1523
6' - 12'	2.12	379	2.68	259	3.10	919	3.82	1107	5.46	1534
12' - 18'	2.42	439							4.72	1540
18' - 24'	2.65	516								
24' - 30'	2.89	562								
30' - 36'	3.06	617								
36' - 42'	3.35	687								

THESE DRAWINGS REPRESENT DESIGNS PREPARED FOR USE BY THE ALABAMA DEPARTMENT OF TRANSPORTATION; AND ARE NOT TO BE COPIED, REPRODUCED, ALTERED, OR USED BY ANYONE, OR ANY ORGANIZATION, WITHOUT THE EXPRESSED WRITTEN CONSENT OF THE ALABAMA DEPARTMENT OF TRANSPORTATION REPRESENTATIVE AUTHORIZED TO APPROVE SUCH USE. ANYONE MAKING UNAUTHORIZED USE OF THESE DRAWINGS MAY BE PROSECUTED TO THE FULLEST EXTENT OF THE LAW.

DESIGN SECTION SUPERVISOR

ASSISTANT BRIDGE ENGINEER

BRIDGE ENGINEER

ALABAMA DEPARTMENT OF TRANSPORTATION

THIS STANDARD TO BE USED WTH ANY OF THE FOLLOWING STANDARDS

CS-3-1 Wing Standard For Required Wing

REVISIONS

1. Digitized 08/31/04 - VTW

STANDARD

REINFORCED CONCRETE BOX CULVERT OPENING DOUBLE 10' x 8' FILL 0' - 42' ANY SKEW

ESTIMATED QUANTITIES			STANDARD DWG. NO.
COMPUTED BY: F.W.			CD - 108
VERIFIED BY:			
CHECKED BY: F.W.	DRAWN BY: F.W. & G.J.	DESIGNED BY:	
DATE CHECKED:	DATE DRAWN: 11-06-70	SCALE: As Shown	SHEET NO. 1 OF 1

U:\Standards\Culvertuscustistandard\2b1008.dgn

Plotted: 13-Apr-2006 02:02 PM

REFERENCE PROJECT NUMBER	FISCAL YEAR	SHEET NUMBER

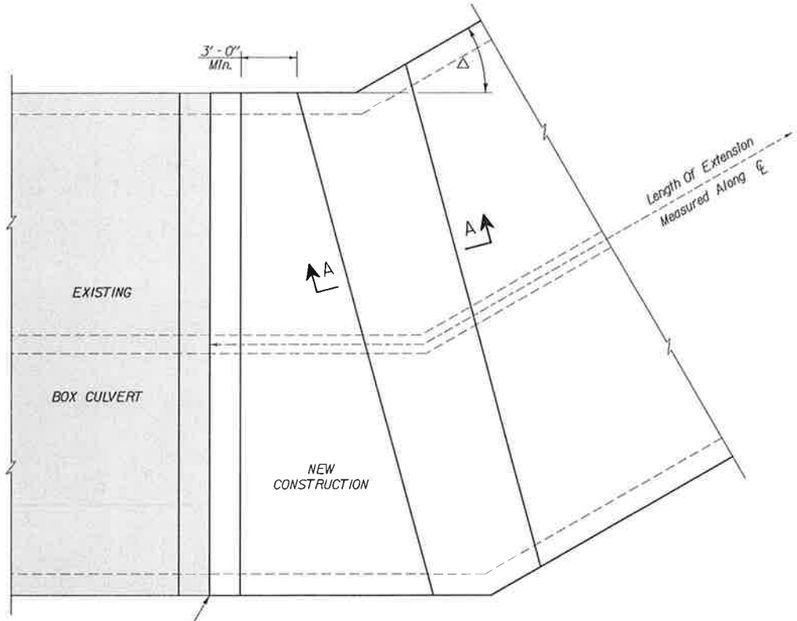

PLAN VIEW - NO SKEW

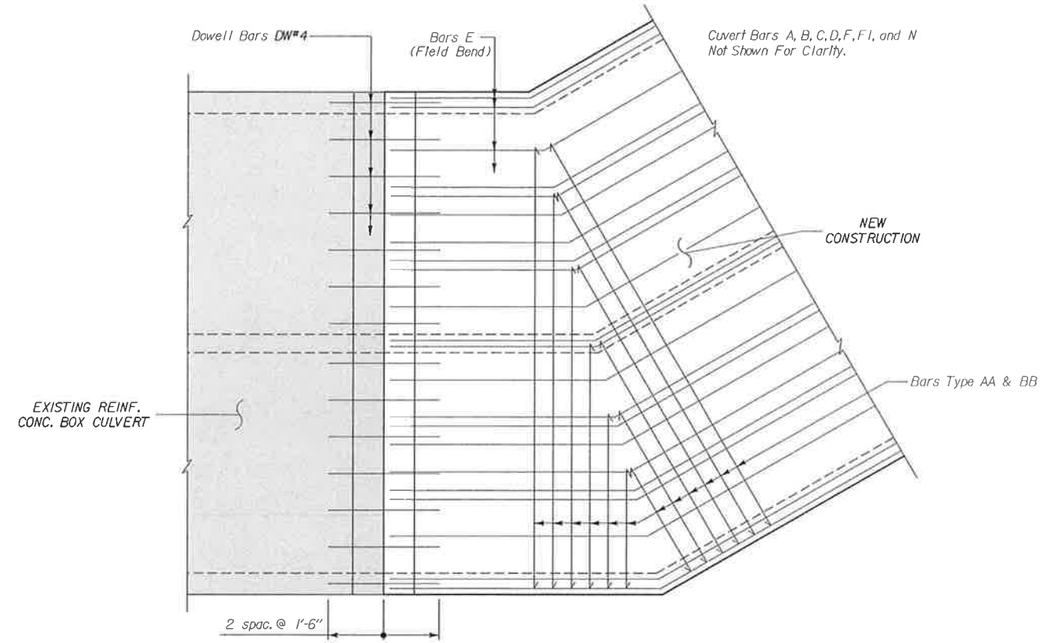

PLAN VIEW OF SLAB REINFORCEMENT - NO SKEW

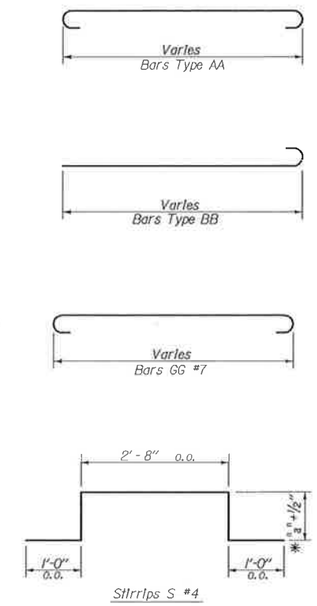

See Note 3.

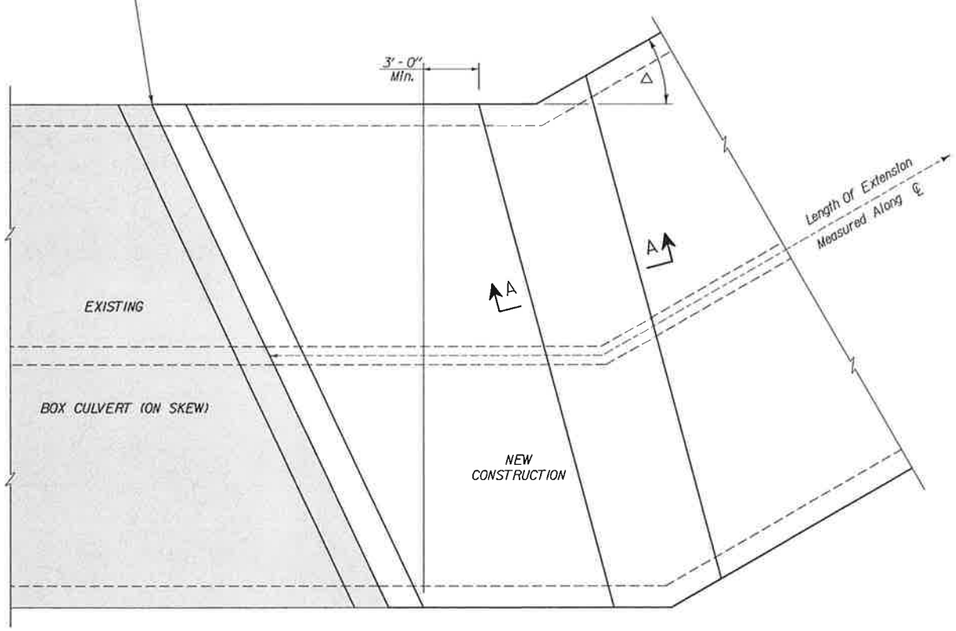

PLAN VIEW - ON SKEW

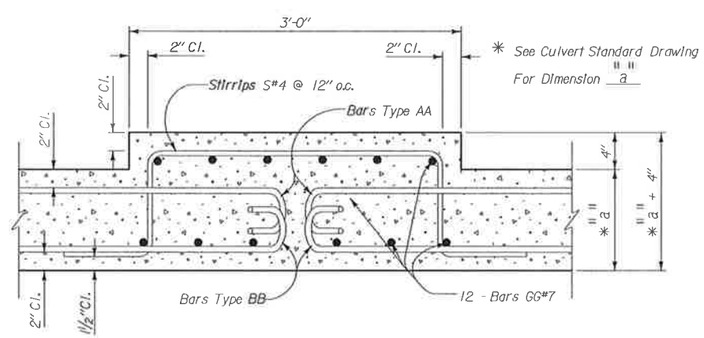

SECTION A - A
TOP SLAB SHOWN (INVERT FOR BOTTOM SLAB)

GENERAL NOTES

1. See STD.DWG.CS-3-1 For Details Regarding Bars AA and BB.
2. Max. Δ=30° per 50 foot section of culvert.
3. See Standard Drawing CX For Details On Culvert Extension/Splicing.
4. This Drawing Shall Be Used In Conjunction With A Standard Culvert Drawing Of The Required Size. Single Or Multiple Barrel Culvert Of Any Skew May Be Used. Stirrups Shall Be Evenly Spaced At 1'-0" o.c. Max. Bars "E" shall Be Field Bent To Fit.
5. Dowels Bars DW #4 (3'-0") @ 12" o.c. Max. Shall Be Used, Extending At Least 1'-6" Into Old Concrete Exterior Walls And Slabs And Shall Be Secured In Existing Structure With An Approved Epoxy Grout. Dowel Bars Are Not To Be Placed Directly Above Mid-Walls For Multiple Barrel Culverts.
6. Center Dowel Bars DW#4 In Slab And Walls.

THESE DRAWINGS REPRESENT DESIGNS PREPARED FOR USE BY THE ALABAMA DEPARTMENT OF TRANSPORTATION, AND ARE NOT TO BE COPIED, REPRODUCED, ALTERED, OR USED BY ANYONE, OR ANY ORGANIZATION, WITHOUT THE EXPRESSED WRITTEN CONSENT OF THE ALABAMA DEPARTMENT OF TRANSPORTATION REPRESENTATIVE AUTHORIZED TO APPROVE SUCH USE. ANYONE MAKING UNAUTHORIZED USE OF THESE DRAWINGS MAY BE PROSECUTED TO THE FULLEST EXTENT OF THE LAW.

DESIGN SECTION SUPERVISOR

ASSISTANT BRIDGE ENGINEER

BRIDGE ENGINEER

ALABAMA DEPARTMENT OF TRANSPORTATION

THIS STANDARD TO BE USED WITH ANY OF THE FOLLOWING STANDARDS
CS-3-1, CX, & Any Culvert Std. Dwg.

REVISIONS

STANDARD

BEND IN NEW BOX CULVERTS OR METHOD OF JOINING BOX CULVERTS EXTENDED ON SKEW

FHWA APPROVED: 8-25-10

CHECKED BY:	DRAWN BY: R.T.	ESTIMATED QUANTITIES
		COMPUTED BY:
		VERIFIED BY:
DATE CHECKED: 11-09-93	DATE DRAWN: 11-09-93	DESIGNED BY:
		SCALE: N. T. S.

STANDARD DWG. NO.

CX-2-1

SHEET NO. 1 OF 1

Q:\StandardsBooks\Culvert\2013 StandardsBook\cx21.dgn
Plotted: 07-Sep-2012 03:50 PM

REFERENCE PROJECT NUMBER	FISCAL YEAR	SHEET NUMBER

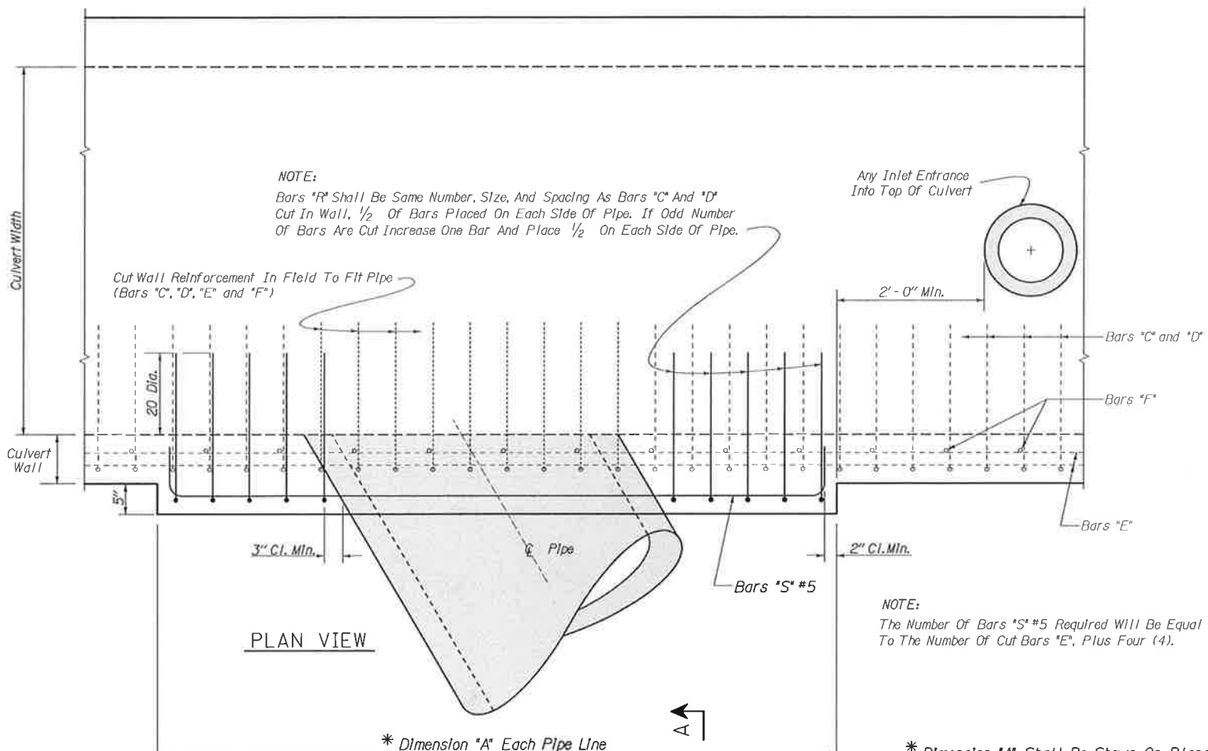

PLAN VIEW

NOTE:
The Number Of Bars "S" #5 Required Will Be Equal To The Number Of Cut Bars "E", Plus Four (4).

* Dimension "A" Each Pipe Line

* Dimension "A" Shall Be Shown On Plans Or Be Furnished By The Project Engineer Prior To Ordering Reinforcing.

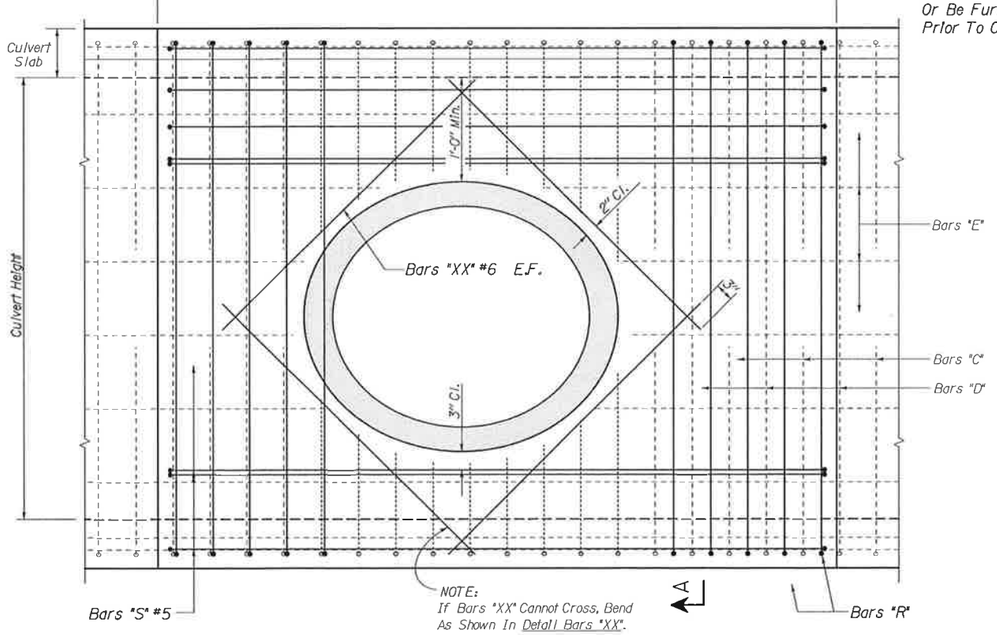

NOTE:
If Bars "XX" Cannot Cross, Bend As Shown In Detail Bars "XX".

LONGITUDINAL ELEVATION

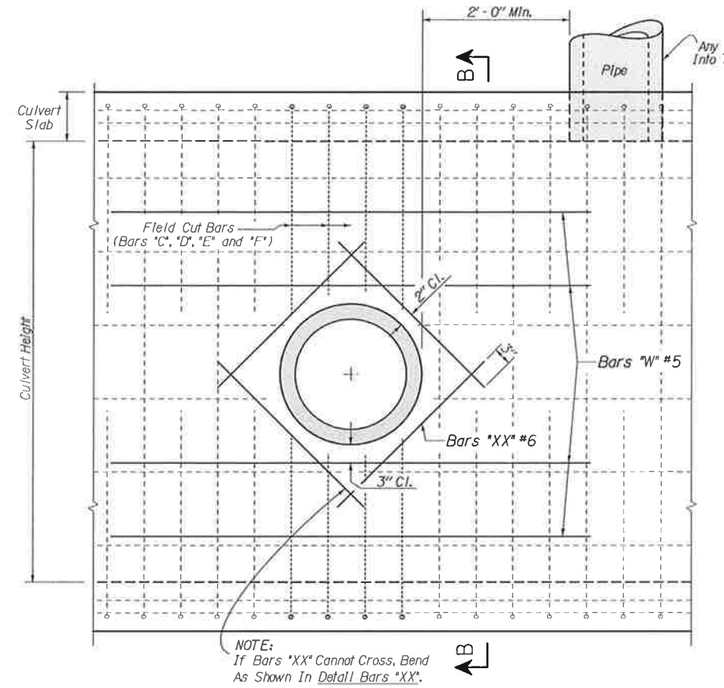

NOTE:
If Bars "XX" Cannot Cross, Bend As Shown In Detail Bars "XX".

LONGITUDINAL ELEVATION

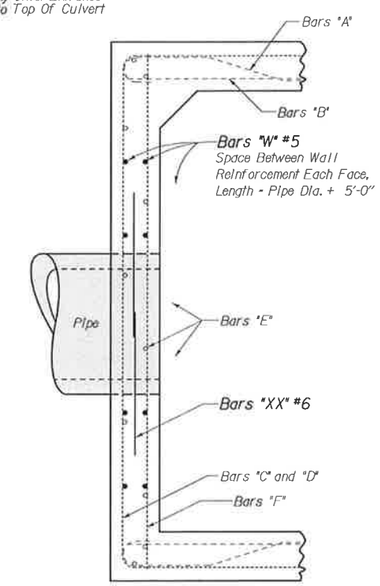

SECTION B - B

PIPE ENTRANCE INTO BOX CULVERT SIDES

WHEN OUTSIDE DIAMETER OF PIPE IS LESS THAN 1/3 THE BOX CULVERT HEIGHT, USE THIS METHOD OF CONSTRUCTION.

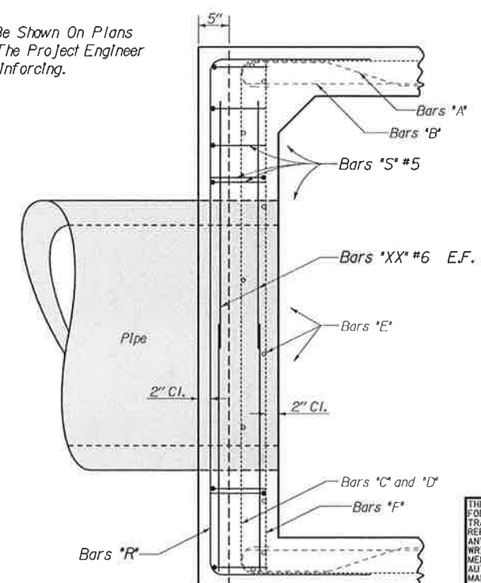

SECTION A - A

PIPE ENTRANCE INTO BOX CULVERT SIDES

WHEN THE OUTSIDE DIAMETER OF PIPE IS GREATER THAN 1/3 THE BOX CULVERT HEIGHT AND NOT MORE THAN THE BOX CULVERT HEIGHT MINUS ONE (1) FOOT, USE THIS METHOD OF CONSTRUCTION.

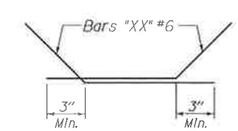

DETAIL BARS "XX"

THESE DRAWINGS REPRESENT DESIGNS PREPARED FOR USE BY THE ALABAMA DEPARTMENT OF TRANSPORTATION; AND ARE NOT TO BE COPIED, REPRODUCED, ALTERED, OR USED BY ANYONE, OR ANY ORGANIZATION, WITHOUT THE EXPRESSED WRITTEN CONSENT OF THE ALABAMA DEPARTMENT OF TRANSPORTATION REPRESENTATIVE AUTHORIZED TO APPROVE SUCH USE. ANYONE MAKING UNAUTHORIZED USE OF THESE DRAWINGS MAY BE PROSECUTED TO THE FULLEST EXTENT OF THE LAW.

DESIGN SECTION SUPERVISOR

ASSISTANT BRIDGE ENGINEER

BRIDGE ENGINEER

ALABAMA DEPARTMENT OF TRANSPORTATION

THIS STANDARD TO BE USED WTH ANY OF THE FOLLOWING STANDARDS
All Std. Box Culvert Drawings.

REVISIONS

STANDARD

PIPE ENTRANCE INTO CONCRETE BOX CULVERT SIDES

FHWA APPROVED: 8-25-10		ESTIMATED QUANTITIES	STANDARD DWG. NO.
CHECKED BY:	DRAWN BY: R.T.	COMPUTED BY:	PEC-1
DATE CHECKED: 03-21-91	DATE DRAWN: 03-21-91	VERIFIED BY:	
		DESIGNED BY:	
		SCALE: NONE	SHEET NO. 1 OF 1

Q:\StandardsBooks\Culvert\2013 StandardsBook\pec1.dgn

Plotted: 07-Sep-2012 03:51 PM

REFERENCE PROJECT NO	FISCAL YEAR	SHEET NO

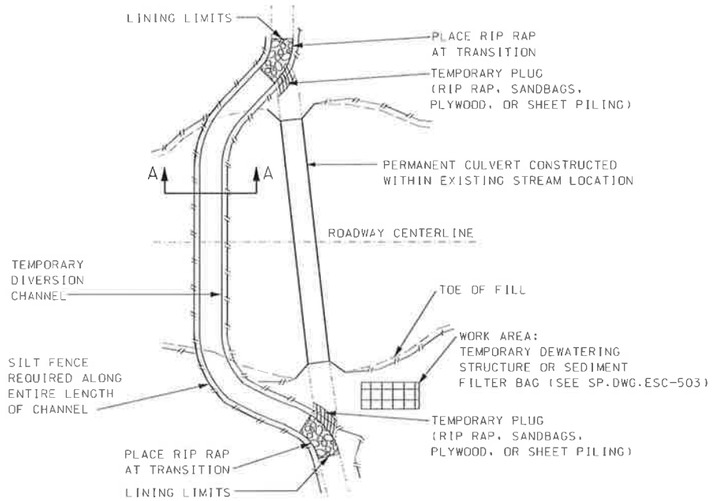

CULVERT CONSTRUCTED
WITHIN EXISTING STREAM

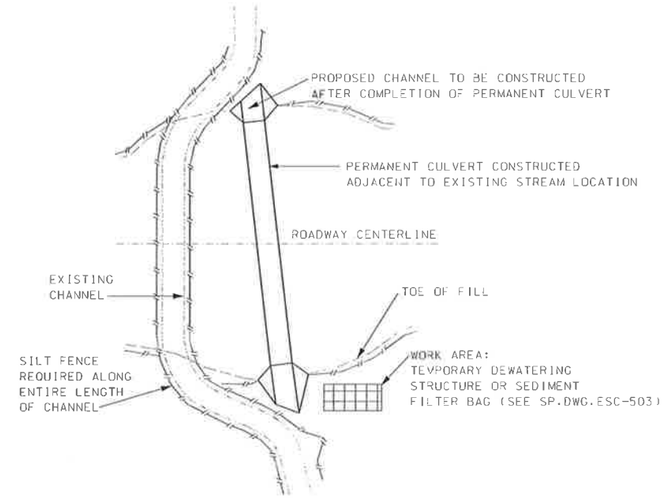

CULVERT CONSTRUCTED
OUTSIDE EXISTING STREAM

NOTES:

1. TEMPORARY DIVERSION CHANNELS MAY BE USED TO DIVERT NORMAL STREAM PATH FLOW FROM AN ERODIBLE AREA UNTIL SUCH AREAS CAN BE STABILIZED.
2. CONTRACTOR SHALL DETERMINE CULVERT AND DIVERSION CHANNEL SIZES, CONSTRUCTION METHODS AND MATERIALS FOR TEMPORARY CULVERT CROSSINGS.
3. FILTER FABRIC OR SUITABLE PLASTIC SHEETING MAY BE USED WITHOUT RIP-RAP FOR CHANNEL FLOW VELOCITIES OF LESS THAN 3.0 FPS.
4. RIP-RAP WITH FILTER FABRIC MAY BE USED FOR CHANNEL FLOW VELOCITIES OF 3.0 FPS TO 9.0 FPS. THE RIP-RAP SHALL BE SIZED USING FHWA HEC-15 DESIGN OF ROADSIDE CHANNELS WITH FLEXIBLE LININGS.
5. LOCATIONS OR TYPES OF TEMPORARY DIVERSION WILL NOT BE SHOWN ON THE PLANS AS REQUIRED ITEMS NOR WILL REQUIREMENTS FOR MATERIALS OR CONSTRUCTION BE FOUND IN THE STANDARD SPECIFICATIONS.
6. DIVERSION CHANNEL SHALL BE STABILIZED AND INSPECTED BY THE ENGINEER BEFORE FLOW IS DIVERTED.
7. DURING CONSTRUCTION OF DIVERSION CHANNEL, DAMAGE TO THE EXISTING STREAM, CANOPY REMOVAL, AND DEPTH OF THE CHANNEL CONSTRUCTION SHALL BE MINIMIZED.
8. NEW CHANNEL CONSTRUCTION SHALL BE COMPLETED IN THE DRY BEFORE DIVERTING WATER FROM THE EXISTING CHANNEL. WHERE THIS IS NOT FEASIBLE, TEMPORARY FLOW DIVERSION STRUCTURES CAN BE USED UNTIL WORK IS COMPLETE. THESE STRUCTURES CAN BE ANY NON-ERODIBLE MATERIAL.
9. CONSTRUCTION OF THE CHANNEL RELOCATIONS AND CULVERTS SHALL PROCEED AS FOLLOWS:
   - 9.1. CONSTRUCT A MEANDERING TEMPORARY CHANNEL CHANGE ADJACENT TO THE PROPOSED CULVERT TO DIVERT WATER TEMPORARILY DURING THE CULVERT CONSTRUCTION. TEMPORARY EROSION CONTROL MEASURES SHALL BE INSTALLED IN ACCORDANCE WITH THE STANDARD SPECIFICATIONS.
   - 9.2. RELOCATE CHANNEL AND CONSTRUCT CULVERT SIMULTANEOUSLY.
   - 9.3. SOD AND/OR RIP-RAP RECONSTRUCTED BANKS AT TRANSITIONS. THE UPPER CHANNEL PLUG IS TO REMAIN IN PLACE UNTIL SUBNOTE (9.1) THROUGH (9.4) UNDER THIS HEADING ARE COMPLETED TO INSURE THAT ALL CONSTRUCTION IS IN THE DRY.
   - 9.4. IF AN EARTH PLUG IS NECESSARY AT THE DOWNSTREAM END OF THE CHANNEL IT SHOULD BE REMOVED FIRST, THEN REMOVE THE UPPER PLUG TO RELEASE WATER INTO THE RECONSTRUCTED CHANNEL.
   - 9.5 PLUGS SHOULD REMAIN IN PLACE UNTIL PERMANENT STABILIZATION OF THE NEW WATER COURSE IS COMPLETED. REMOVAL OF PLUGS SHOULD ONLY BE PERFORMED FOLLOWING ACCEPTANCE OF ALL STABILIZATION WORK BY THE ENGINEER.
10. THE DETAILS PROVIDED DEPICT TYPICAL TEMPORARY DIVERSION CHANNELS. THE DETAILS SHOWN ARE OPTIONAL RECOMMENDATIONS, BUT NOT MANDATORY.
11. THE CONTRACTOR MAY PROPOSE THE USE OF OTHER DIVERSION OPTIONS SUCH AS PIPING, PUMPING OR STAGED CONSTRUCTION.
12. WITH THE EXCEPTION OF SILT FENCE, ALL ITEMS AND WORK ASSOCIATED WITH STREAM DIVERSIONS ARE SUBSIDIARY TO THE CULVERT CONSTRUCTION AND SHALL NOT BE PAID DIRECTLY.

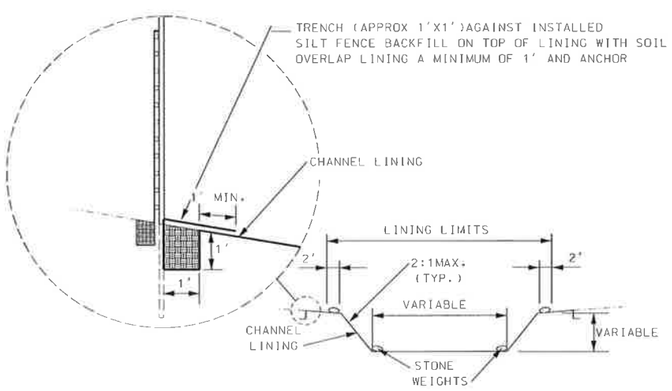

SECTION A-A

TEMPORARY DIVERSION CHANNEL
WITH GEOTEXTILE FABRIC OR PLASTIC LINING

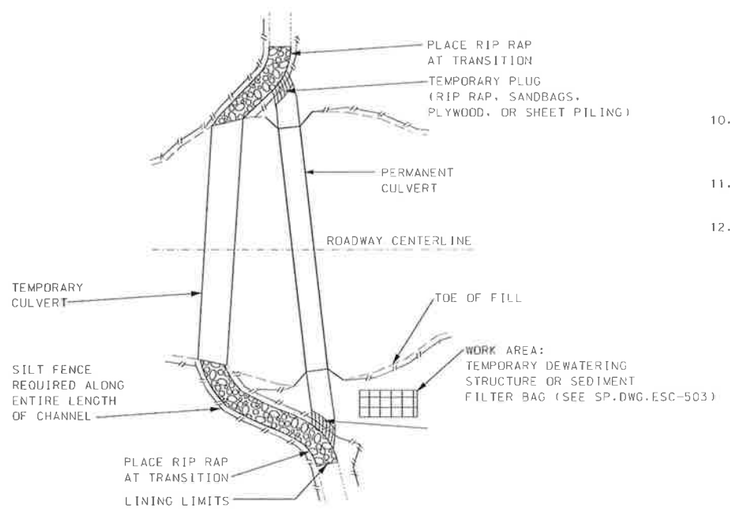

TEMPORARY CULVERT
USED DURING CONSTRUCTION

--SPECIFICATIONS--
CURRENT ALABAMA DEPARTMENT OF TRANSPORTATION

THIS DRAWING REPRESENTS DESIGNS PREPARED FOR USE BY THE ALABAMA DEPARTMENT OF TRANSPORTATION AND IS NOT TO BE COPIED, REPRODUCED, ALTERED, OR USED BY ANYONE, OR ANY ORGANIZATION, WITHOUT THE EXPRESSED WRITTEN CONSENT OF THE ALABAMA DEPARTMENT OF TRANSPORTATION REPRESENTATIVE AUTHORIZED TO APPROVE THIS USE. ANYONE MAKING UNAUTHORIZED USE OF THIS DRAWING MAY BE PROSECUTED TO THE FULLEST EXTENT OF THE LAW.

REVISIONS
1. Updated "SECTION A-A" and deleted original Note Nos 9 & 10 then renumbered on 08-24-11 by J.F.T.

ALABAMA DEPARTMENT OF TRANSPORTATION
1409 COLISEUM BOULEVARD
MONTGOMERY, AL 36130-3050

DESIGN BUREAU SPECIAL DRAWING

TEMPORARY STREAM DIVERSION

DRAWN BY:
DATE DRAWN: 2006

SPECIAL DRAWING NO. ESC-505

INDEX NO. 1168

NOT TO SCALE

REFERENCE PROJECT NUMBER	FISCAL YEAR	SHEET NUMBER

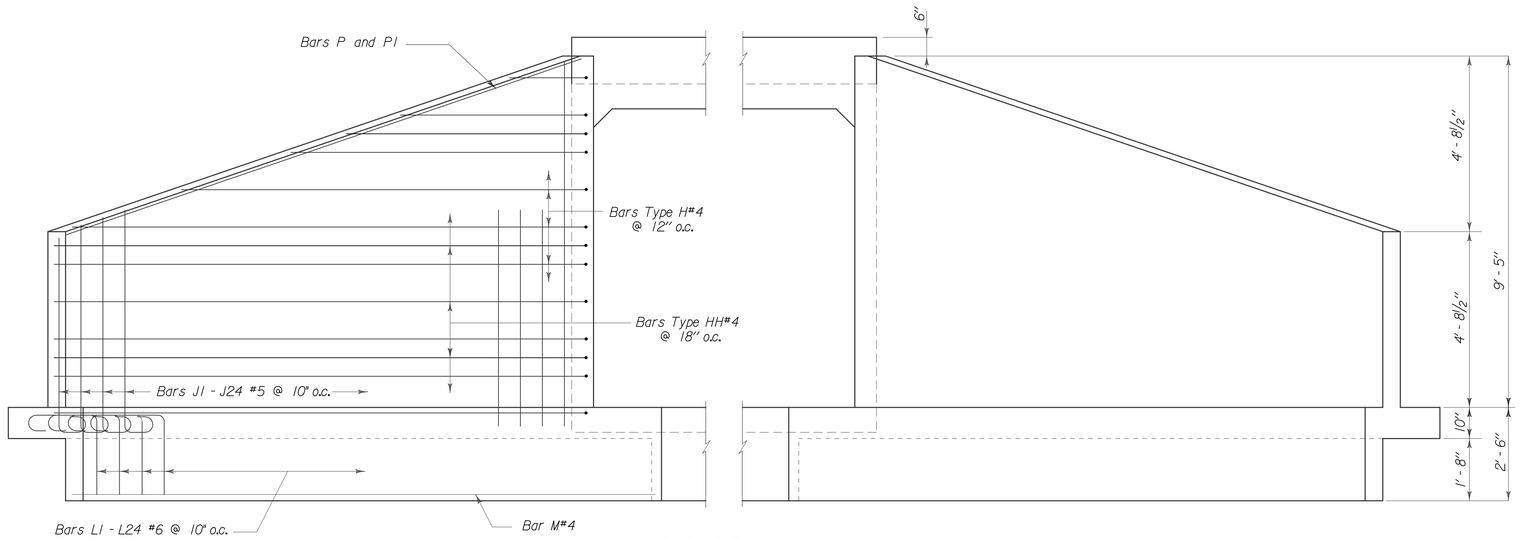

ELEVATION

Scale: ½" = 1' - 0"

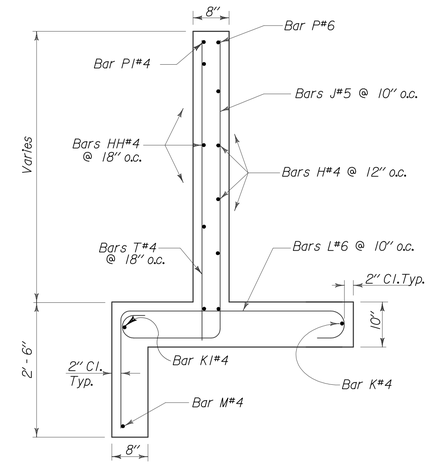

TYPICAL WING SECTION

Scale: ¾" = 1' - 0"

Bar	Size	No.	Total Length	DIMENSIONS "A"	DIMENSIONS "B"
J1	#5	4	6'-10"	1'-0"	5'-3"
J2	#5	4	6'-9½"	1'-0½"	5'-2"
J3	#5	4	7'-3½"	1'-0½"	5'-8"
J4	#5	4	6'-10"	1'-1"	5'-2"
J5	#5	4	7'-9"	1'-1½"	6'-0½"
J6	#5	4	6'-10½"	1'-1½"	5'-2"
J7	#5	4	8'-2"	1'-2"	6'-5"
J8	#5	4	6'-11"	1'-2"	5'-2"
J9	#5	4	8'-7½"	1'-2½"	6'-10"
J10	#5	4	6'-11½"	1'-2½"	5'-2"
J11	#5	4	9'-0"	1'-3"	7'-2"
J12	#5	4	7'-0½"	1'-3½"	5'-2"
J13	#5	4	9'-6"	1'-3½"	7'-7½"
J14	#5	4	7'-1"	1'-4"	5'-2"
J15	#5	4	9'-11"	1'-4"	8'-0"
J16	#5	4	7'-1½"	1'-4½"	5'-2"
J17	#5	4	10'-4½"	1'-4½"	8'-5"
J18	#5	4	7'-2"	1'-5"	5'-2"
J19	#5	4	10'-10"	1'-5½"	8'-9½"
J20	#5	4	7'-2½"	1'-5½"	5'-2"
J21	#5	4	11'-3"	1'-6"	9'-2"
J22	#5	4	7'-3"	1'-6"	5'-2"
J23	#5	4	11'-8½"	1'-6½"	9'-7"
J24	#5	4	7'-4"	1'-7"	5'-2"
L1	#6	4	5'-5"	2'-7"	2'-2"
L2	#6	4	5'-6"	2'-8"	2'-2"
L3	#6	4	5'-7½"	2'-9½"	2'-2"
L4	#6	4	5'-8½"	2'-10½"	2'-2"
L5	#6	4	5'-10"	3'-0"	2'-2"
L6	#6	4	5'-11"	3'-1"	2'-2"
L7	#6	4	6'-0"	3'-2"	2'-2"
L8	#6	4	6'-1½"	3'-3½"	2'-2"
L9	#6	4	6'-2½"	3'-4½"	2'-2"
L10	#6	4	6'-4"	3'-6"	2'-2"
L11	#6	4	6'-5"	3'-7"	2'-2"
L12	#6	4	6'-6½"	3'-8½"	2'-2"
L13	#6	4	6'-7½"	3'-9½"	2'-2"
L14	#6	4	6'-9"	3'-11"	2'-2"
L15	#6	4	6'-10"	4'-0"	2'-2"
L16	#6	4	6'-11"	4'-1"	2'-2"
L17	#6	4	7'-0½"	4'-2½"	2'-2"
L18	#6	4	7'-1½"	4'-3½"	2'-2"
L19	#6	4	7'-3"	4'-5"	2'-2"
L20	#6	4	7'-4"	4'-6"	2'-2"
L21	#6	4	7'-5"	4'-7"	2'-2"
L22	#6	4	7'-6½"	4'-8½"	2'-2"
L23	#6	4	7'-7½"	4'-9½"	2'-2"
L24	#6	4	7'-9"	4'-11"	2'-2"
P	6	4	20'-0"	0	0
P1	4	4	20'-0"	0	0
K	4	4	27'-6½"	23'-9"	3'-9½"
K1	4	4	25'-0½"	0	0
M	4	4	23'-0½"	21'-4½"	1'-8"

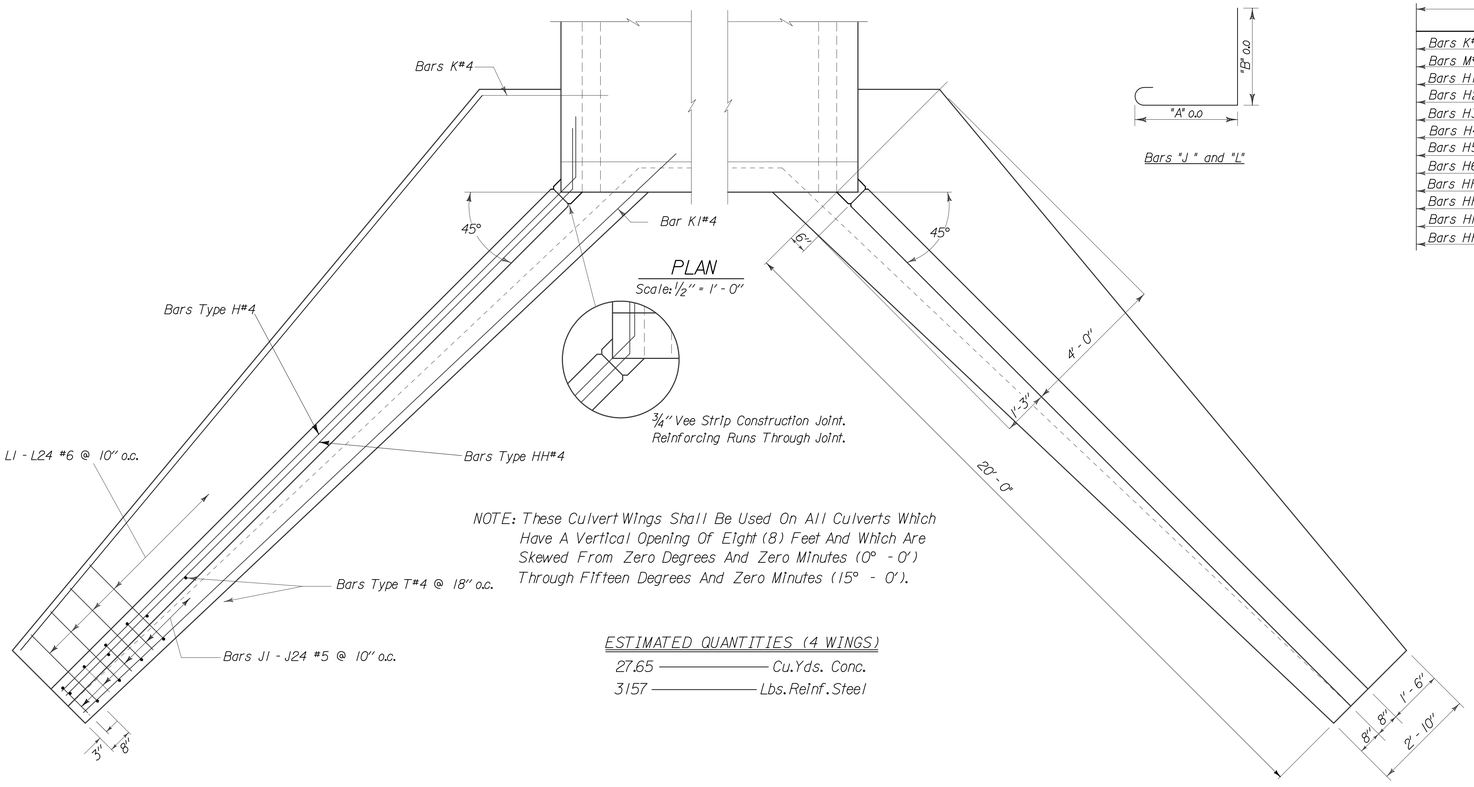

PLAN

Scale: ½" = 1' - 0"

¾" Vee Strip Construction Joint. Reinforcing Runs Through Joint.

NOTE: These Culvert Wings Shall Be Used On All Culverts Which Have A Vertical Opening Of Eight (8) Feet And Which Are Skewed From Zero Degrees And Zero Minutes (0° - 0') Through Fifteen Degrees And Zero Minutes (15° - 0').

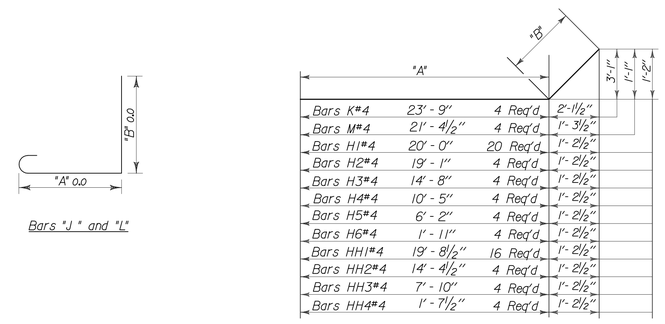

Bars "J" and "L"

Bar	Size	No.	Total Length	DIMENSIONS "A"	DIMENSIONS "B"
T1	4	4	5'-3"	0	0
T2	4	4	5'-7½"	0	0
T3	4	4	6'-0"	0	0
T4	4	4	6'-4"	0	0
T5	4	4	6'-8½"	0	0
T6	4	4	7'-1"	0	0
T7	4	4	7'-5½"	0	0
T8	4	4	7'-9½"	0	0
T9	4	4	8'-2"	0	0
T10	4	4	8'-6"	0	0
T11	4	4	8'-10½"	0	0
T12	4	4	9'-3"	0	0
T13	4	4	9'-7½"	0	0
H1	4	20	21'-8"	20'-0"	1'-8"
H2	4	4	20'-9"	19'-1"	1'-8"
H3	4	4	16'-4"	14'-8"	1'-8"
H4	4	4	12'-1"	10'-5"	1'-8"
H5	4	4	7'-10"	6'-2"	1'-8"
H6	4	4	3'-7"	1'-11"	1'-8"
HH1	4	16	21'-5½"	19'-8½"	1'-8"
HH2	4	4	16'-0½"	14'-4½"	1'-8"
HH3	4	4	9'-6"	7'-10"	1'-8"
HH4	4	4	3'-3½"	1'-7½"	1'-8"

ESTIMATED QUANTITIES (4 WINGS)

27.65 ——— Cu.Yds. Conc.

3157 ——— Lbs.Reinf.Steel

THESE DRAWINGS REPRESENT DESIGNS PREPARED FOR USE BY THE ALABAMA DEPARTMENT OF TRANSPORTATION; AND ARE NOT TO BE COPIED, REPRODUCED, ALTERED, OR USED BY ANYONE, OR ANY ORGANIZATION, WITHOUT THE EXPRESSED WRITTEN CONSENT OF THE ALABAMA DEPARTMENT OF TRANSPORTATION REPRESENTATIVE AUTHORIZED TO APPROVE SUCH USE. ANYONE MAKING UNAUTHORIZED USE OF THESE DRAWINGS MAY BE PROSECUTED TO THE FULLEST EXTENT OF THE LAW.

DESIGN SECTION SUPERVISOR

ASSISTANT BRIDGE ENGINEER

BRIDGE ENGINEER

ALABAMA DEPARTMENT OF TRANSPORTATION

THIS STANDARD TO BE USED WTH ANY OF THE FOLLOWING STANDARDS

REVISIONS

1. Reinf. 3-22-82 F.W.
2. Digitized 6-24-05 L.E.D.

STANDARD
REINFORCED CONCRETE
BOX CULVERT WINGS
OPENING 8' HEIGHT
3 TO 1 SLOPE 0° SKEW

ESTIMATED QUANTITIES

COMPUTED BY:

VERIFIED BY: F.W.

CHECKED BY: DRAWN BY: Johnson DESIGNED BY: M.T.W.

DATE CHECKED: DATE DRAWN: 7-27-70 SCALE: As Shown

STANDARD DWG. NO.

W8-3:1-0°

U:\Standards\Culvert\uscustwing\w083000.dgn
Plotted: 02-Mar-2006 08:20 AM

REFERENCE PROJECT NO	FISCAL YEAR	SHEET NO

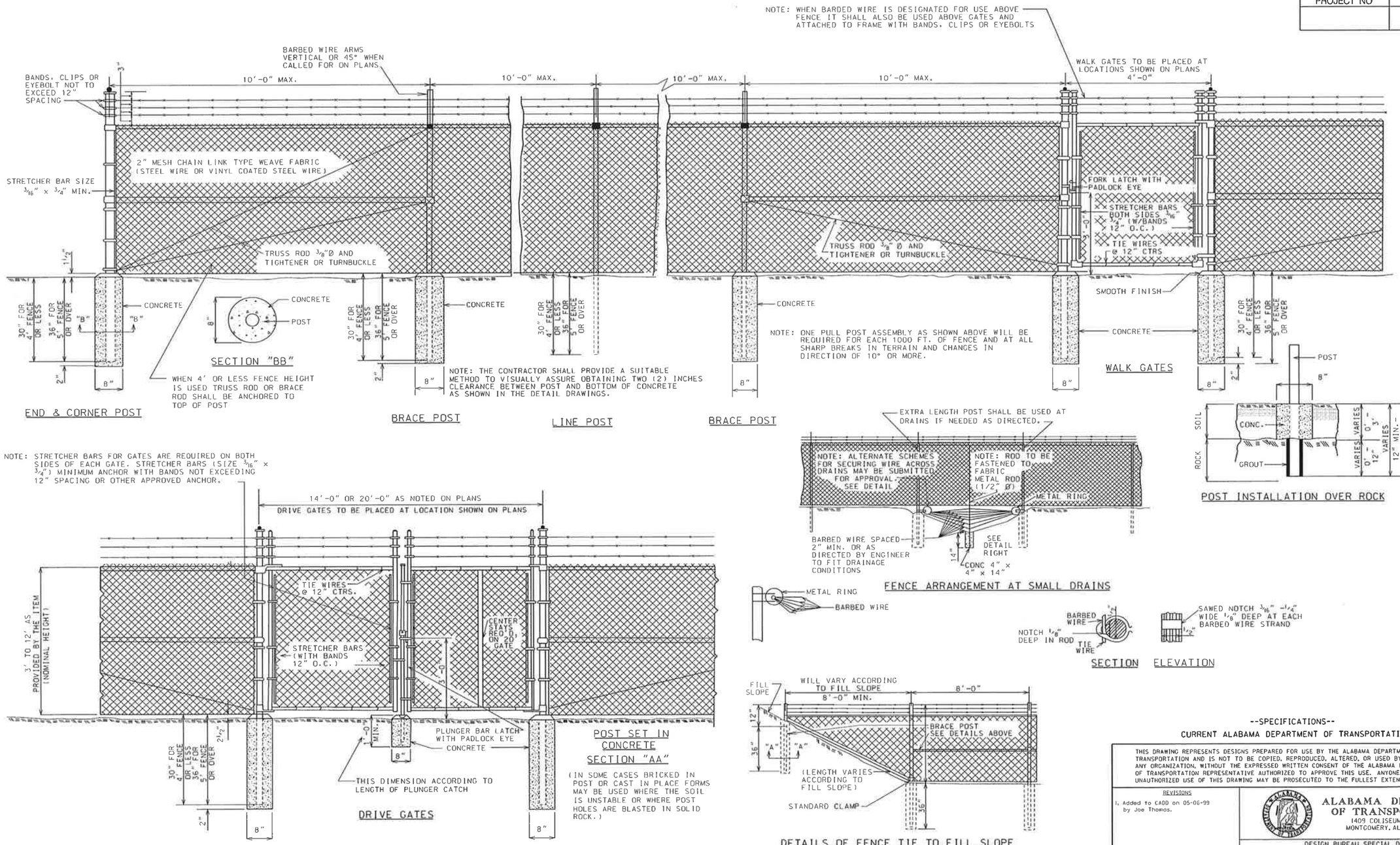

--SPECIFICATIONS--

CURRENT ALABAMA DEPARTMENT OF TRANSPORTATION

THIS DRAWING REPRESENTS DESIGNS PREPARED FOR USE BY THE ALABAMA DEPARTMENT OF TRANSPORTATION AND IS NOT TO BE COPIED, REPRODUCED, ALTERED, OR USED BY ANYONE, OR ANY ORGANIZATION, WITHOUT THE EXPRESSED WRITTEN CONSENT OF THE ALABAMA DEPARTMENT OF TRANSPORTATION REPRESENTATIVE AUTHORIZED TO APPROVE THIS USE. ANYONE MAKING UNAUTHORIZED USE OF THIS DRAWING MAY BE PROSECUTED TO THE FULLEST EXTENT OF THE LAW.

REVISIONS

1. Added to CADD on 05-06-99 by Joe Thomas.

ALABAMA DEPARTMENT OF TRANSPORTATION
1409 COLISEUM BOULEVARD
MONTGOMERY, AL 36130-3050

DESIGN BUREAU SPECIAL DRAWING

INDUSTRIAL FENCE (3'-12' CHAIN LINK, WITH/WITHOUT BARBED WIRE)

DRAWN BY:

DATE DRAWN: 10-25-90

SPECIAL DRAWING NO. IF-634

INDEX NO. 210

NOT TO SCALE

REFERENCE PROJECT NO	FISCAL YEAR	SHEET NO

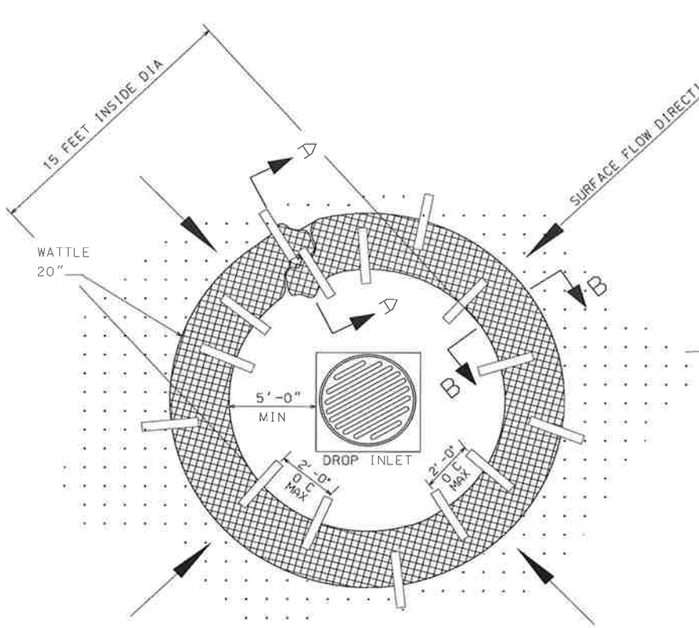

PLAN VIEW

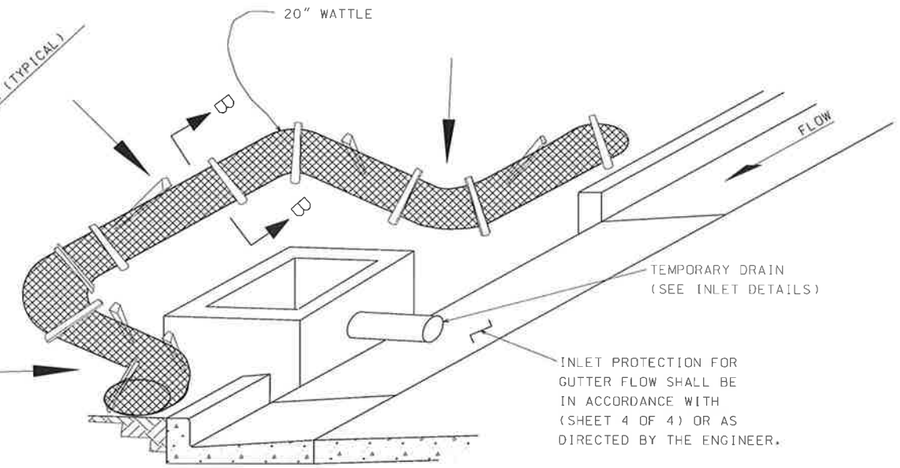

CURB INLET PROTECTION (STAGE 2)

SINGLE OR DOUBLE WING INLET

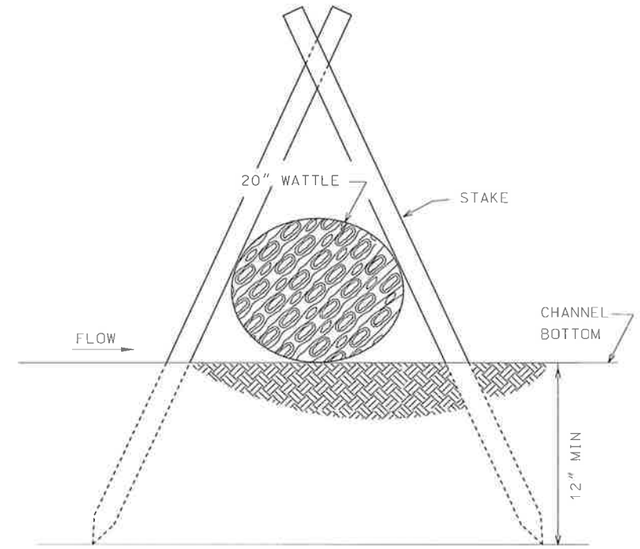

SECTION B-B

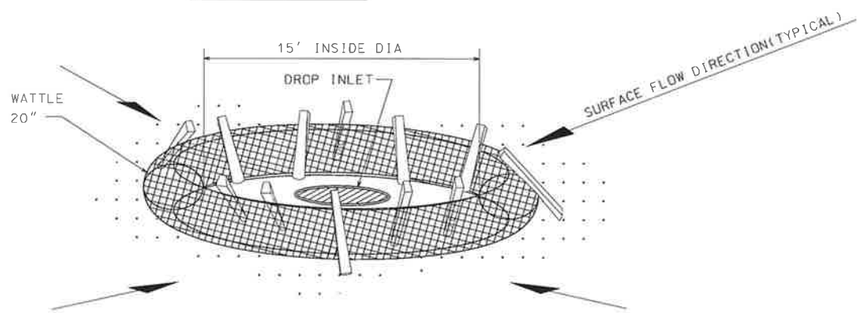

DROP INLET PROTECTION

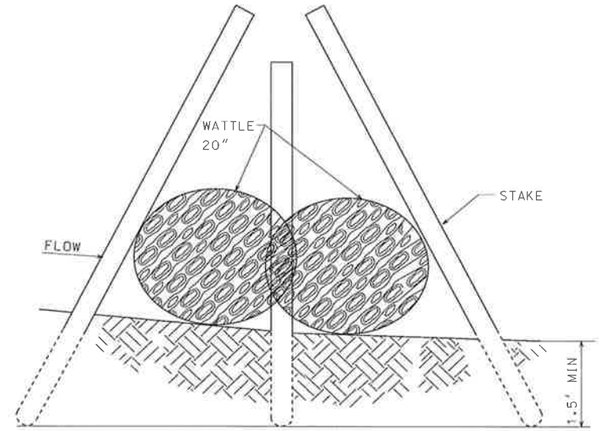

SECTION A-A

NOTES:

1. ANCHORING STAKES SHALL BE SIZED, SPACED, AND BE OF A MATERIAL THAT EFFECTIVELY SECURES THE WATTLE. STAKE SPACING SHALL BE A MAXIMUM OF TWO FEET.
2. OVERLAP ENDS OF WATTLES PER MANUFACTURERS RECOMMENDATIONS (1'MIN.3'MAX).
3. SEE ALDOT LIST 11-24 FOR APPROVED WATTLES.
4. SILT FENCE OR SAND BAGS MAY ALSO BE USED FOR THIS APPLICATION. HAY BALES NOT ACCEPTABLE DURING THIS STAGE.

--SPECIFICATIONS--
CURRENT ALABAMA DEPARTMENT OF TRANSPORTATION

THIS DRAWING REPRESENTS DESIGNS PREPARED FOR USE BY THE ALABAMA DEPARTMENT OF TRANSPORTATION AND IS NOT TO BE COPIED, REPRODUCED, ALTERED, OR USED BY ANYONE, OR ANY ORGANIZATION, WITHOUT THE EXPRESSED WRITTEN CONSENT OF THE ALABAMA DEPARTMENT OF TRANSPORTATION REPRESENTATIVE AUTHORIZED TO APPROVE THIS USE. ANYONE MAKING UNAUTHORIZED USE OF THIS DRAWING MAY BE PROSECUTED TO THE FULLEST EXTENT OF THE LAW.

REVISIONS

1. Revised note on "CURB INLET PROTECTION (STAGE 2)" from "5 OF 5" to "4 OF 4" and added "REQUIRED TRENCHING" on SECTION A-A and "SECTION B-B" on 09-24-11 by J.F.T.
2. Revised and updated "CURB INLET PROTECTION (STAGE 2)", "DROP INLET PROTECTION", "SECTION A-A" and "SECTION B-B" to show new staking w/o trenching on 09-24-12 by J.F.T.
3. Deleted a "NOTE" and replaced and revised Note 4. Revised and updated "PLAN VIEW" on 07-11-13 by J.F.T.

ALABAMA DEPARTMENT OF TRANSPORTATION
1409 COLISEUM BOULEVARD
MONTGOMERY, AL 36130-3050

DESIGN BUREAU SPECIAL DRAWING

INLET PROTECTION DETAILS OF WATTLES

DRAWN BY: _____
DATE DRAWN: 2006

SPECIAL DRAWING NO: ESC-400 (SHEET 3 OF 4)

INDEX NO: 1163-B

NOT TO SCALE