SIGN IMPROVEMENTS AT
GOLDSMITH-SCHIFFMAN WILDLIFE SANCTUARY
PROJECT NO. 71-16-SP46

FOR

CITY OF HUNTSVILLE
HUNTSVILLE, ALABAMA

BY

LAND DESIGN SOLUTIONS, INC
6996 LINDA STREET, HUNTSVILLE, AL 35811
(256) 714 - 1470

SHEET INDEX

SHEET NO.	TITLE
1	TOPOGRAPHIC SURVEY
2	OVERALL PLAN VIEW
3	ENTRANCE SIGN-PLAN VIEWS
4	SIGN CONSTRUCTION DETAILS
S-1	(ELM) SIGN DETAILS
1 of 1	(OMI) ENTRANCE SIGN DETAILS

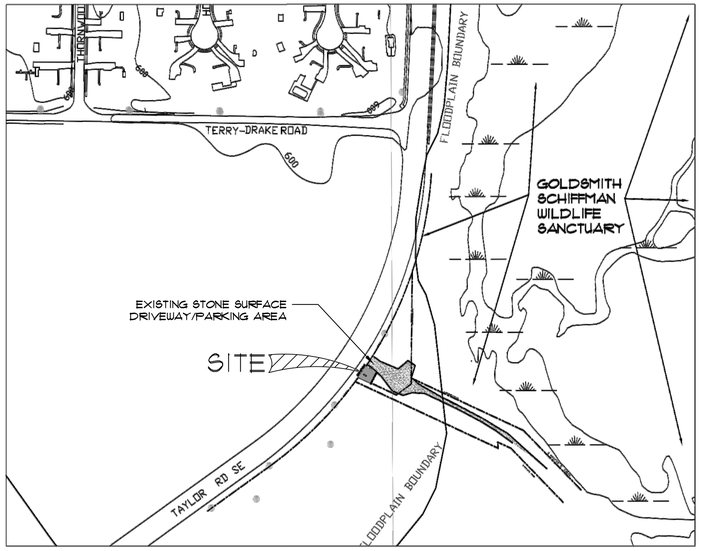

VICINITY MAP
SCALE: 1"=200'

HUNTSVILLE
The Star of Alabama

CURVE	RADIUS	DELTA	ARC DIST	CHORD BEARING	CH DIST	TANGENT
C1	1097.76'	18°30'06"	354.48'	S 44°56'16" W	352.94'	178.80'
C2	1097.76'	17°42'13"	339.20'	S 45°20'12" W	337.85'	170.96'
C3	1097.76'	00°47'52"	15.29'	S 36°05'09" W	15.29'	7.64'

LINE	BEARING	DISTANCE
L1	S 65°00'35" E	116.86'
L2	N 53°36'46" E	51.40'
L3	N 00°32'57" E	16.35'
L4	N 65°00'35" W	41.05'
L5	S 04°13'42" E	17.19'
L6	N 65°00'35" W	441.15'

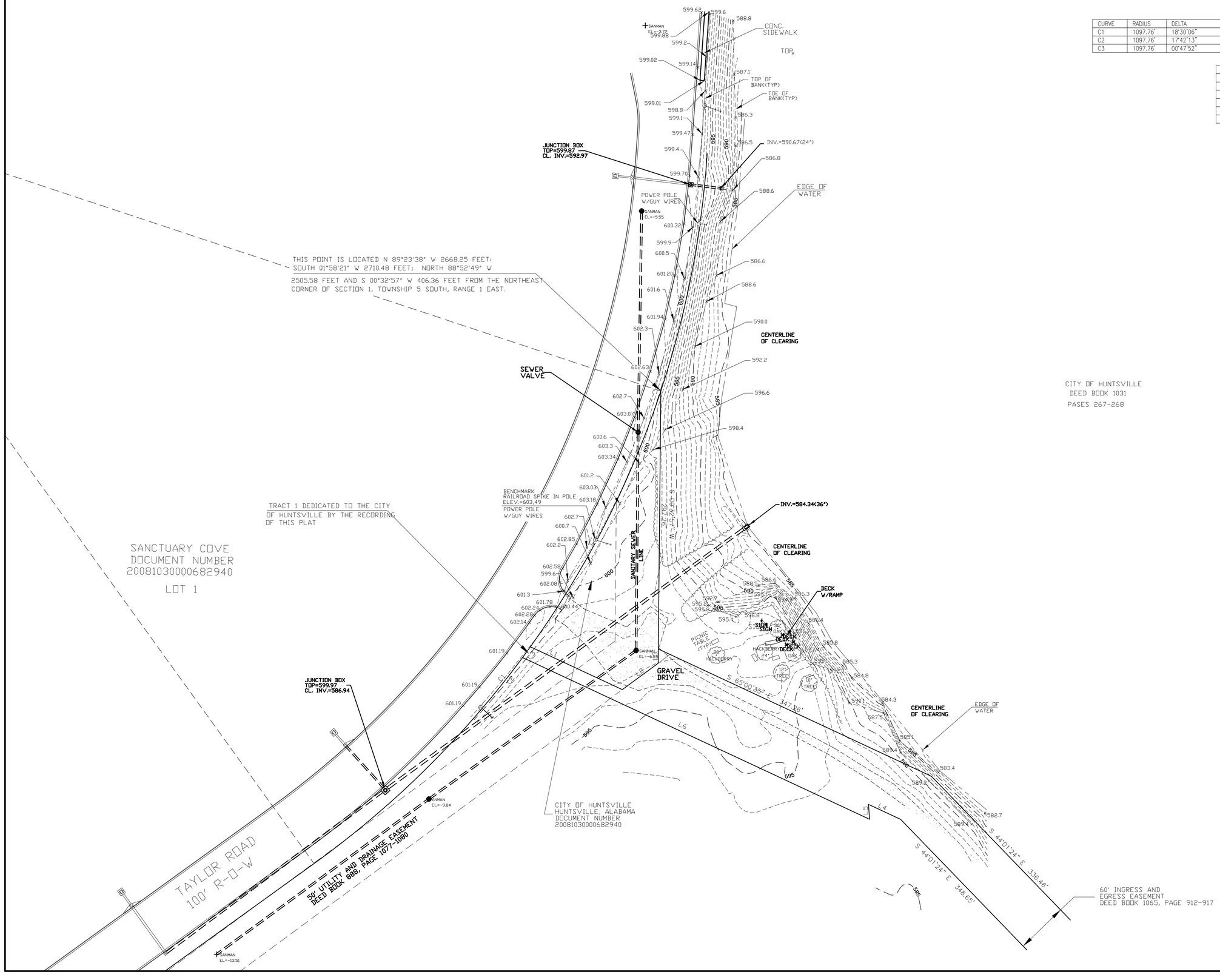

CITY OF HUNTSVILLE
DEED BOOK 1031
PAGES 267-268

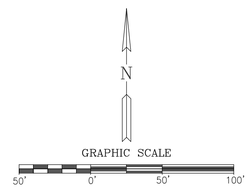

REVISION NO.	DESCRIPTION	BY	DATE

GOLDSMITH–SCHIFFMAN WILDLIFE SANCTUARY ON TAYLOR ROAD

TOPOGRAPHIC SURVEY

ALABAMA LICENSED NO. 9765 LAND SURVEYOR 5-2-16 BILLY H. SMITH ENGINEER

SMITH ENGINEERING COMPANY, INC.
8624 MEMORIAL PARKWAY SW
HUNTSVILLE, AL. 35802 (256.539.9426)

DRAWN BY: MD	SCALE: HORIZ. = 1"=50'
APPROVED BY: BHS	DATE: 5-2-16
W.O. NO: 13-171	SHEET: 1 OF 1
DWG. NO: 13-171	

C:\Projects 2016\13-171 taylor rd\ Topo\dwg\13-171 new taylor rd topo.dwg, 5/19/2016 7:21:45 AM, 1:50

CURVE	RADIUS	DELTA	ARC DIST	CHORD BEARING	CH DIST	TANGENT
C1	1097.76'	18°30'06"	354.48'	S 44°56'16" W	352.94'	178.80'
C2	1097.76'	17°42'13"	339.20'	S 45°20'12" W	337.85'	170.96'
C3	1097.76'	00°47'52"	15.29'	S 36°05'09" W	15.29'	7.64'

LINE	BEARING	DISTANCE
L1	S 65°00'35" E	116.86'
L2	N 53°36'46" E	51.40'
L3	N 00°32'57" E	16.35'
L4	N 65°00'35" W	41.05'
L5	S 04°13'42" E	17.19'
L6	N 65°00'35" W	441.15'

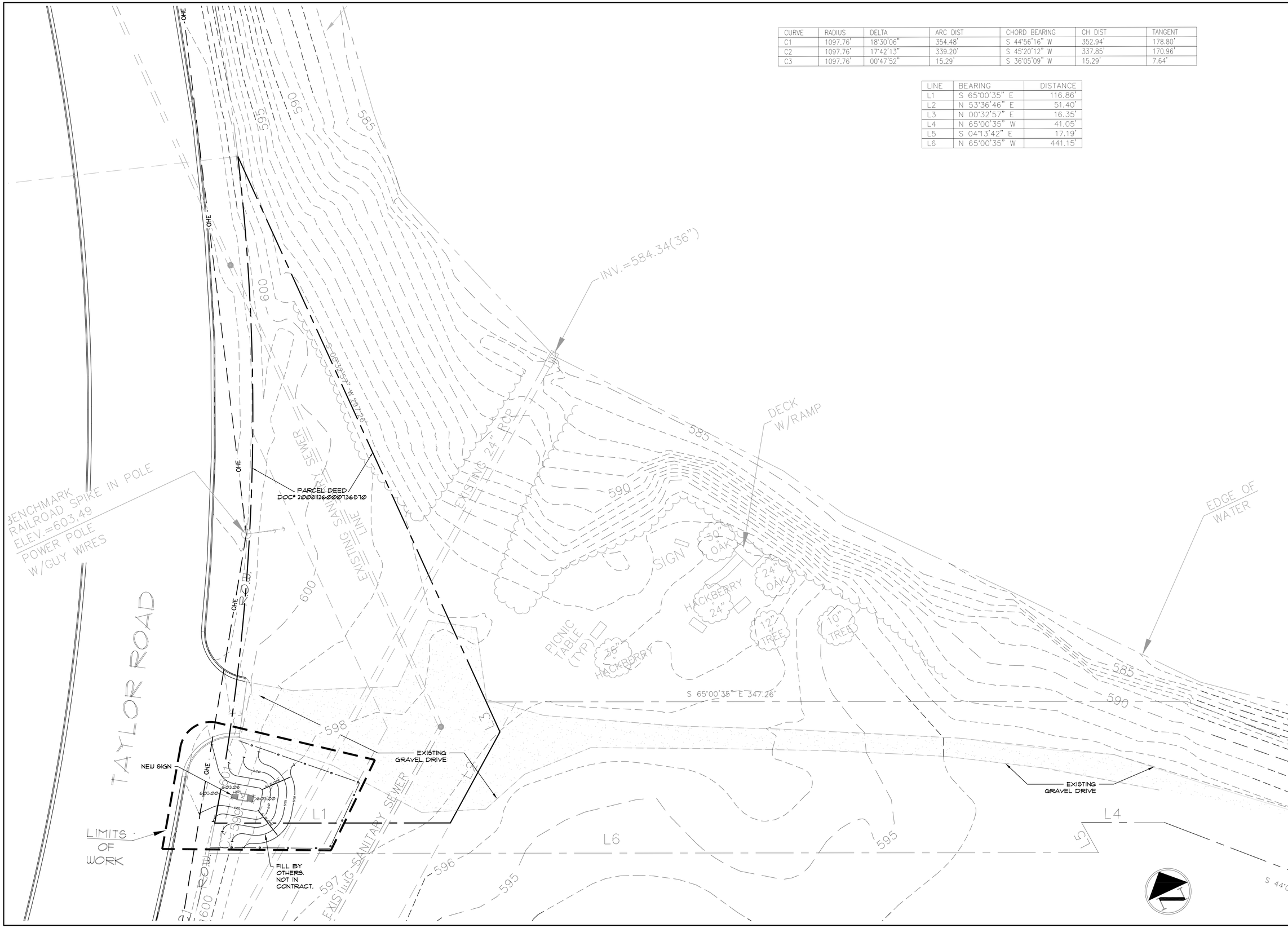

LAND DESIGN SOLUTIONS

6996 LINDA STREET
HUNTSVILLE, ALABAMA 35811

256.714.1470

Sign Improvements at
Goldsmith-Schiffman
Wildlife Sanctuary

OVERALL PLAN VIEW

DATE: September 19, 2016 SCALE: 1"=20'

sheet
2 of 6

GRADING PLAN LEGEND

600	EXISTING CONTOUR
600	NEW CONTOUR
605.96	NEW SPOT ELEVATION
HP	HIGH POINT

GENERAL NOTES

1. SITE TOPOGRAPHY MAPS AND OTHER TOPOGRAPHIC DATA SHOWN ON THESE PLANS OR INCLUDED IN THE SPECIFICATIONS ARE FOR THE INFORMATION OF THE CONTRACTOR. THE CONTRACTOR SHALL MAKE SUCH ADDITIONAL INVESTIGATIONS AS REQUIRED TO ACQUAINT HIMSELF ADEQUATELY WITH THE SITE TOPOGRAPHY AND SUBSURFACE SOIL CONDITIONS FOR PREPARATION OF HIS BID AND FOR THE SUCCESSFUL EXECUTION OF THE WORK.
2. PROTECTION OF WORK: THE CONTRACTOR SHALL BE SOLELY RESPONSIBLE FOR THE PROTECTION OF HIS WORK.
3. THE CONTRACTOR SHALL BE RESPONSIBLE FOR HAVING EXISTING UTILITIES LOCATED PRIOR TO EXCAVATION. THE EXISTENCE AND LOCATION OF ANY UNDERGROUND UTILITIES OR STRUCTURES SHOWN ON THESE DRAWINGS ARE OBTAINED BY A SEARCH OF THE AVAILABLE RECORDS; THIS CONSULTANT ASSUMES NO RESPONSIBILITY AS TO THE ACCURACY OF THEIR DEPICTED LOCATION ON THESE DRAWINGS. THE CONTRACTOR IS REQUIRED TO TAKE DUE PRECAUTIONARY MEASURES TO PROTECT THE UTILITIES SHOWN AND ALL OTHER UTILITIES NOT OF RECORD OR NOT SHOWN ON THESE DRAWINGS BY VERIFICATION OF THEIR LOCATION IN THE FIELD PRIOR TO THE INITIATION OF THEIR WORK.
4. ALL TRENCHING AND EXCAVATION SHALL COMPLY WITH THE "DEPARTMENT OF LABOR, OCCUPATIONAL SAFETY AND HEALTH ADMINISTRATION PUBLICATION (29 CFR PART 1926) OCCUPATIONAL SAFETY AND HEALTH STANDARDS – EXCAVATIONS", LATEST EDITION.
5. FUGITIVE DUST EMISSIONS SHALL BE CONTROLLED BY CONTRACTOR AS PER THE CITY OF HUNTSVILLE REQUIREMENTS.
6. ALL EXISTING TREES OUTSIDE OF THE LIMITS OF WORK SHALL BE PROTECTED DURING THE ACCOMPLISHMENT OF THE WORK, AND SHALL NOT BE DAMAGED IN ANY MANNER.
7. THE CONTRACTOR SHALL REPAIR ANY DAMAGE TO EXISTING STREETS THAT IS CREATED DURING INSTALLATION OF THIS WORK AND ANY OTHER OF HIS CONSTRUCTION OPERATIONS.
8. ALL BOULDERS, DEBRIS, EXCESS SOIL, EXCESS CONSTRUCTION MATERIALS OR TRASH, SHALL BE REMOVED FROM THE SITE AT THE CONTRACTOR'S EXPENSE.
9. ALL PROPOSED CONTOUR ELEVATIONS SHOWN ON THESE PLANS ARE FINISH GRADE. FINISH GRADE WORK BY OTHERS, NOT PART OF THIS CONTRACT.
10. THE CONTRACTOR SHALL BE REQUIRED TO PROVIDE WORK ZONE TRAFFIC CONTROL AND PROTECTION IN ACCORDANCE WITH THE "MANUAL ON UNIFORM TRAFFIC CONTROL DEVICES", LATEST EDITION.
11. IN ACCORDANCE WITH GENERALLY ACCEPTED CONSTRUCTION PRACTICES, THE CONTRACTOR SHALL BE SOLELY AND COMPLETELY RESPONSIBLE FOR CONDITIONS OF THE JOB SITE, INCLUDING SAFETY OF ALL PERSONS AND PROPERTY DURING PERFORMANCE OF THE WORK. THIS REQUIREMENT SHALL APPLY CONTINUOUSLY AND NOT BE LIMITED TO NORMAL WORKING HOURS.
12. THE DUTY OF THIS CONSULTANT TO CONDUCT CONSTRUCTION REVIEW OF THE CONTRACTOR'S PERFORMANCE IS NOT INTENDED TO INCLUDE REVIEW OF THE ADEQUACY OF THE CONTRACTOR'S SAFETY MEASURES IN, OR NEAR, THE CONSTRUCTION SITE.
13. ALL SITE CONCRETE SHALL BE 3000 PSI MINIMUM COMPRESSIVE STRENGTH AT 28 DAYS, CLASS "A", UNLESS OTHERWISE NOTED.
14. ALL REINFORCING STEEL SHALL BE GRADE 60 DEFORMED AND SHALL CONFORM TO ASTM A615, FOR BILLET STEEL.
15. ALL WELDED WIRE FABRIC SHALL CONFORM TO ASTM A185, SMOOTH FABRIC WITH AN ASTM YIELD STRENGTH OF 65,000 PSI.
16. THE CONTRACTOR SHALL PREVENT THE DESTRUCTION OF ALL SURVEY MONUMENTS, BENCH MARKS, PROPERTY CORNERS AND ALL OTHER SURVEY POINTS. WHERE THE REMOVAL OF SUCH POINTS IS NECESSARY FOR THE ACCOMPLISHMENT OF THE WORK, THE CONTRACTOR SHALL INFORM THE ENGINEER IN WRITING, PRIOR TO THE DISTURBANCE OF ANY POINT, AND SHALL NOT DISTURB THE POINT UNTIL WRITTEN PERMISSION TO DO SO HAS BEEN ISSUED BY THE ENGINEER.
17. ALL WORK WITHIN PUBLIC RIGHTS-OF-WAY SHALL CONFORM TO CITY OF HUNTSVILLE REQUIREMENTS.
18. THE CONTRACTOR WILL BE RESPONSIBLE FOR CLEANING DIRT AND DEBRIS FROM THE ADJOINING STREETS DURING CONSTRUCTION. ANY DAMAGE TO ADJOINING AND EXISTING STREETS MUST BE REPAIRED BY THE CONTRACTOR DURING THE CONSTRUCTION OF THE PROJECT.
19. NO CHANGES SHALL BE MADE TO THESE APPROVED PLANS WITHOUT THE CONSULTANT OF RECORD BEING NOTIFIED BEFORE CHANGES ARE MADE, AND THE CONSULTANT OF RECORD ACQUIRING APPROVAL FROM THE CITY ENGINEER.

EXCAVATION NOTES

NOTE: EXCAVATION WORK ON THIS PROJECT IS FOOTING EXCAVATION & BACKFILL OF FOOTING EXCAVATION TO EXISTING GRADE. ALL OTHER EXCAVATION WORK BY OTHERS.

A) ALL EARTH WORK WITHIN BOUNDARY OF SITE SHALL CONFORM TO ALABAMA HIGHWAY DEPARTMENT (ALDOT) STANDARD SPECIFICATIONS FOR HIGHWAY CONSTRUCTION, LATEST EDITION, & AS SHOWN ON OMI PLANS.

B) CLEARING AND GRUBBING:
CONTRACTOR SHALL CLEAR AND GRUB THE SITE PER THE CITED REFERENCES IN "A" ABOVE.

C) TOPSOIL:
CONTRACTOR SHALL STRIP TOPSOIL, ROOT MAT AND OBVIOUS SOFT SURFICIAL SOILS AS INDICATED IN GEOTECH REPORT. ALL APPROVED, STRIPPED TOPSOIL SHALL BE RE-USED ON SITE. ALL REJECTED OR EXCESS TOPSOIL SHALL BE REMOVED OFFSITE. CONTRACTOR SHALL HAUL IN ANY ADDITIONAL, APPROVED OFF-SITE TOPSOIL FOR ALL NEW LAWN AND LANDSCAPE BED AREAS. INSTALL ALL TOPSOIL IN MAX. 8" THICK LIFTS AND LIGHTLY COMPACT. APPROVED TOPSOIL SHALL BE FREE OF ALL LUMPS, CLODS, STIFF CLAY, HARDPAN, WEEDS, STONES AND ROCKS AND ALL OTHER DELETERIOUS MATERIAL. APPROVED TOPSOIL SHALL HAVE MINIMUM 4% ORGANIC MATTER AND PH OF 6.5 TO 7.0, SILTY CLAY LOAM, FROM THE SOIL A HORIZON, AND NOT A SUBSOIL. CONTRACTOR SHALL SUBMIT A 1/2 CUBIC FOOT SAMPLE (OF SEPARATE, ON SITE AND OFF SITE TOPSOILS) FOR APPROVAL, WITH STANDARD SOIL TESTS INDICATING % ORGANIC MANNER, SOURCE LOCATION, PH AND RECOMMENDED ADJUSTMENTS TO MEET FERTILITY AND OTHER STATED REQUIREMENTS. PLACE APPROVED TOPSOIL TO 4" MINIMUM THICKNESS (LIGHTLY COMPACTED) ON ALL LAWN AREAS AND AREAS FROM PERIMETER PARKING LOT CURB OUTWARD TO LIMIT OF WORK. PLACE APPROVED TOPSOIL TO 12" MINIMUM THICKNESS (LIGHTLY COMPACTED) ON ALL PARKING LOT ISLANDS, AS SHOWN ON PLANS.

D) UNCLASSIFIED EXCAVATION:
CONTRACTOR SHALL PERFORM UNCLASSIFIED EXCAVATION PER PLAN DETAILS, PLAN NOTES, OMI PLANS, AND AS FOLLOWS:
AFTER STRIPPING, ALL AREAS WHICH ARE AT GRADE OR ARE TO RECEIVE FILL SHALL BE INSPECTED BY OWNERS REPRESENTATIVE. THE OWNERS REPRESENTATIVE MAY ALSO REQUIRE THAT THE SUBGRADE BE PROOF ROLLED. PROOF ROLLING SHALL CONSIST OF REPEATED PASSES OF A LOADED TANDEM DUMP TRUCK PROVIDED BY CONTRACTOR (TO BE INCLUDED IN BID AS A SUBSIDIARY OBLIGATION). ANY AREAS JUDGED BY OWNERS REPRESENTATIVE TO DEFLECT EXCESSIVELY DURING PROOF ROLLING SHALL BE ADDRESSED AS FOLLOWS:
1) SOFT SOIL ON ANY PART OR LOCATION OF THIS PROJECT SHALL BE UNDERCUT, IF DIRECTED BY OWNERS REPRESENTATIVE, REMOVING SOFT SOILS OFF SITE OR AT THE DISCRETION OF THE OWNERS REPRESENTATIVE USED AS LAWN AREA FILL (IN PRIOR APPROVED LOCATIONS BELOW TOPSOIL), FOR PLACEMENT, SPREADING, DRYING AND COMPACTING IN 8" THICK LIFTS.
2) REPLACEMENT OF UNDERCUT SOFT SOILS SHALL BE WITH APPROVED OFF SITE SOIL PLACED IN 8" THICK COMPACTED LIFTS.
3) ALL FILL (INCLUDING COMPACTION REQUIREMENTS OF FILL) SHALL BE WITH APPROVED OFF-SITE SOIL PER OMI PLANS.
4) ALL CUT AND FILL (INCLUDING CLEARING AND GRUBBING AND ANY HAUL OFF OF EXCESS MATERIAL) SHALL BE CONSIDERED INCIDENTAL AND NO ADDITIONAL COMPENSATION SHALL BE PAID.
5) SOIL COMPACTION REQUIREMENTS, SHALL APPLY TO ALL AREAS OF SITE.

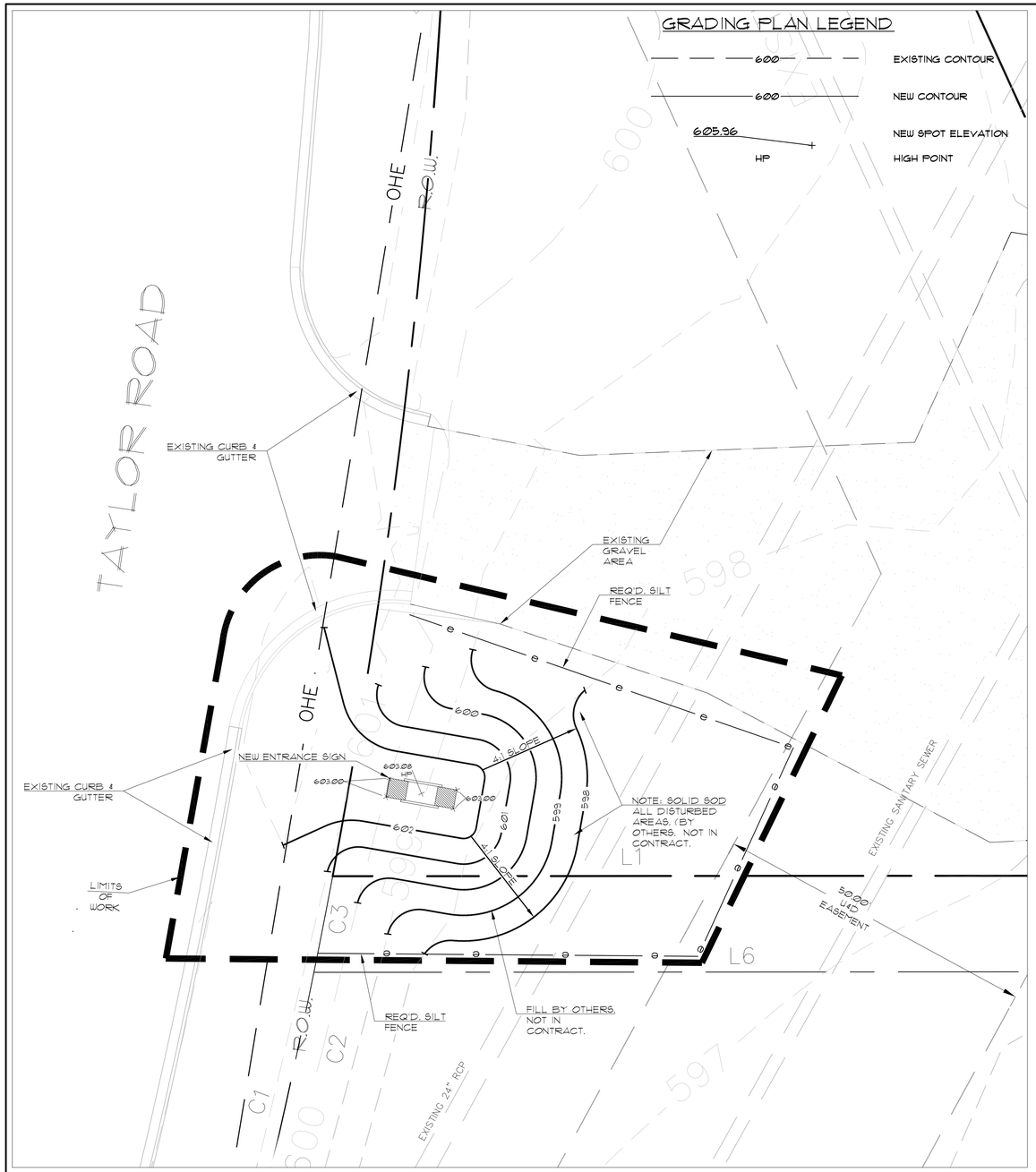

A ENTRANCE SIGN GRADING PLAN
SCALE: 1" = 10'

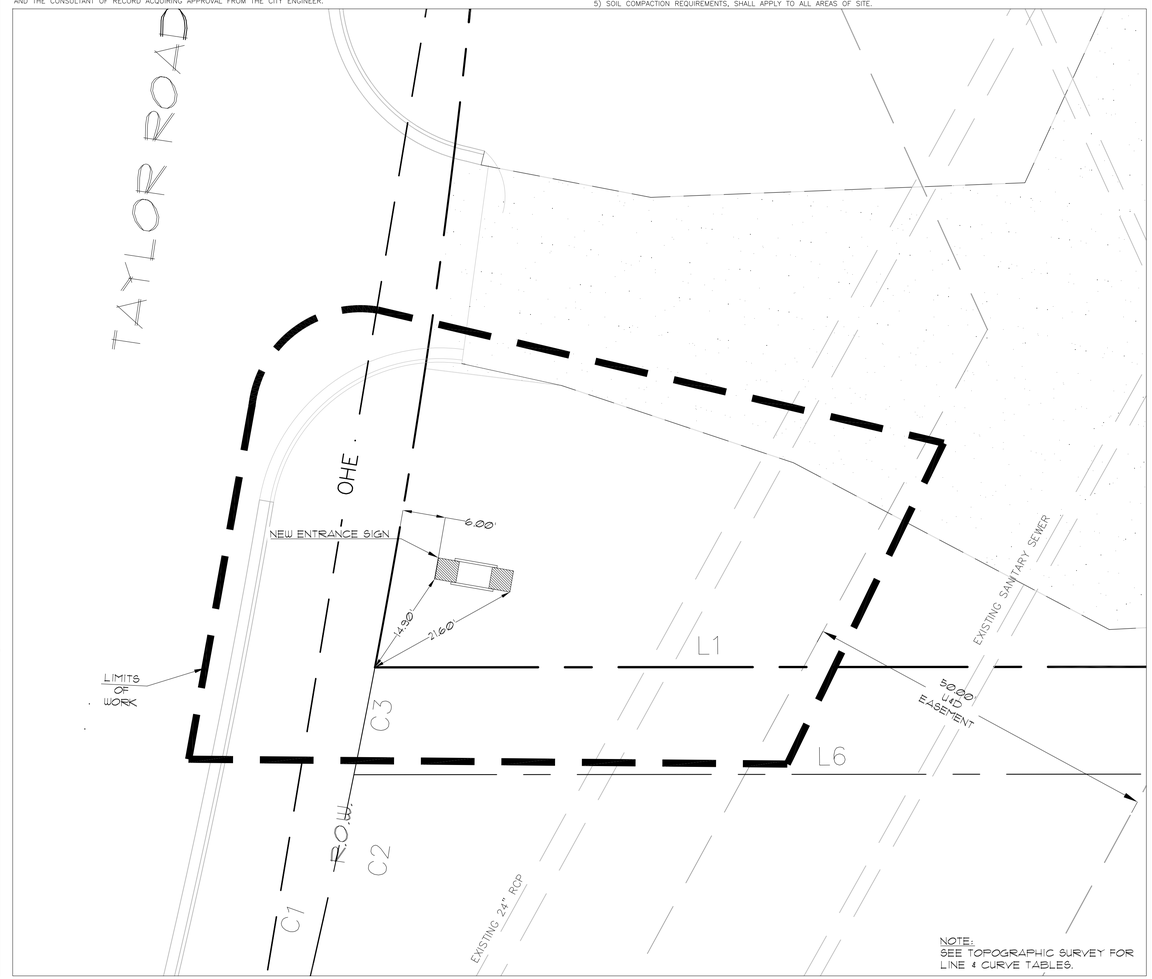

B ENTRANCE SIGN LAYOUT PLAN
SCALE: 1" = 10'

STATE OF ALABAMA
michael anthony ashcraft
NO. 35811
REGISTERED LANDSCAPE ARCHITECT

LAND DESIGN SOLUTIONS
6996 LINDA STREET
HUNTSVILLE, ALABAMA 35811
256.714.1470

Sign Improvements at
Goldsmith-Schiffman
Wildlife Sanctuary

ENTRANCE SIGN PLAN-PLAN VIEWS

DATE: September 19, 2016 SCALE: See Plan

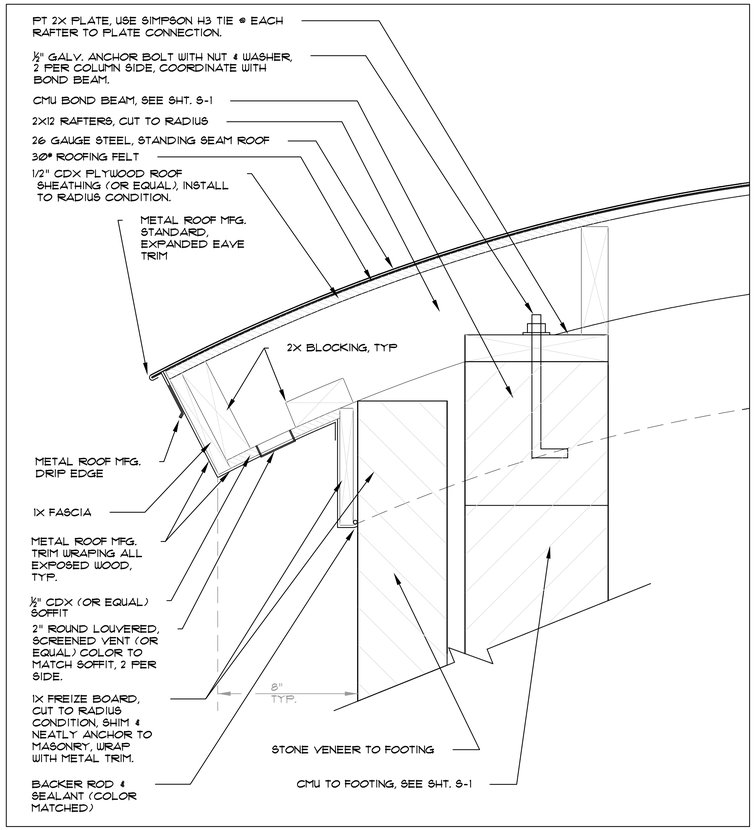

C/4 TYPICAL EAVE DETAIL
SCALE: 3" = 1'-0"
(SIMILAR CONDITION FOR RAKE)

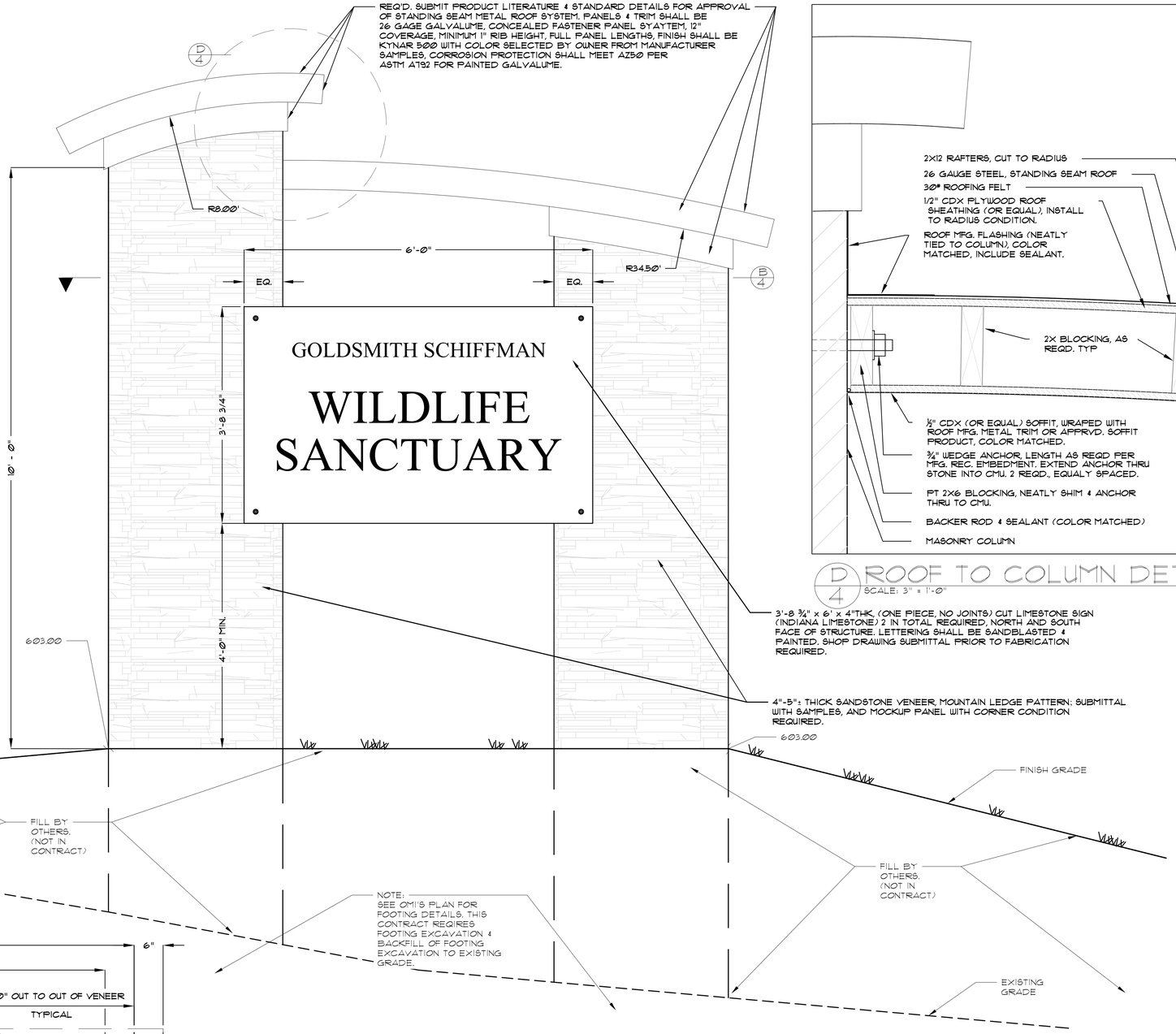

A/4 SOUTH ELEVATION OF MONUMENT SIGN
LOOKING NORTH
SCALE: 1" = 1'-0"

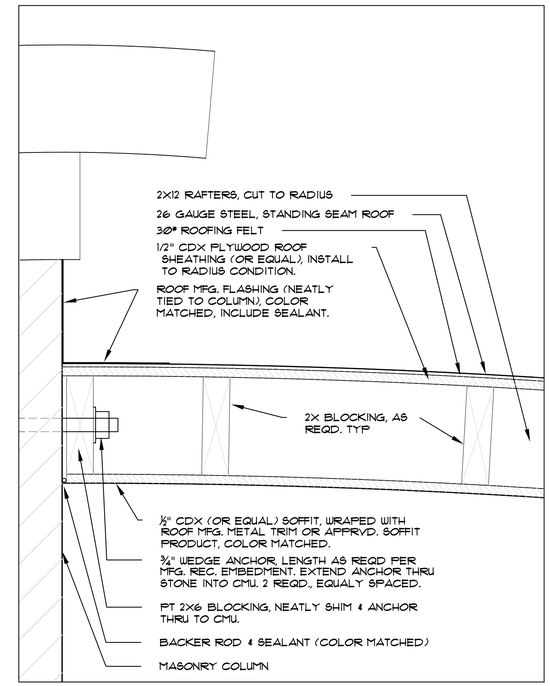

D/4 ROOF TO COLUMN DETAIL
SCALE: 3" = 1'-0"

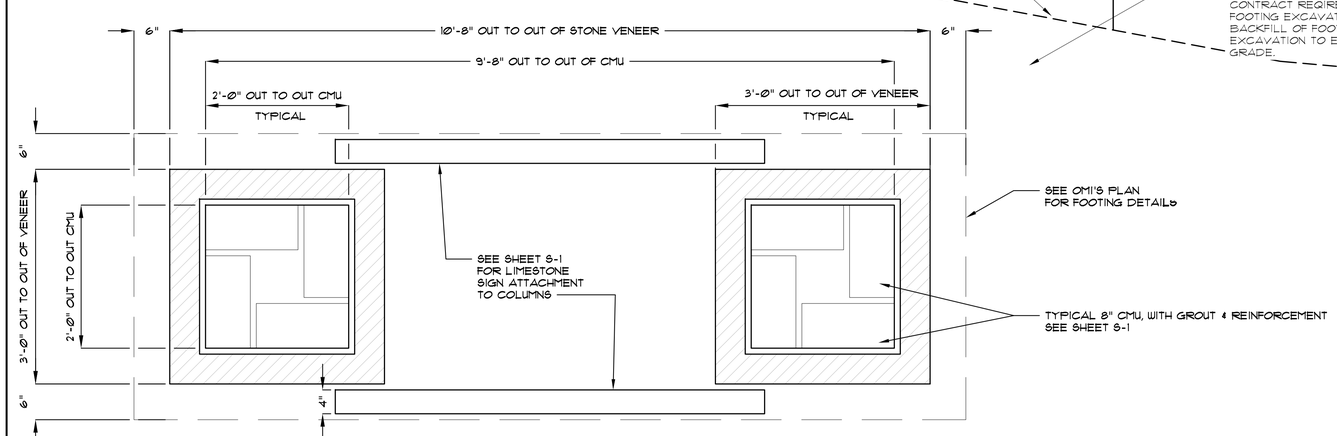

B/4 SECTION OF MONUMENT SIGN
SCALE: 1" = 1'-0"

NOTE:

CONTRACTOR SHALL REVIEW & COORDINATE THE REQUIREMENTS OF THIS SHEET, SHEET S-1, AND OMI PLAN.

LAND DESIGN SOLUTIONS
6996 LINDA STREET
HUNTSVILLE, ALABAMA 35811
256.714.1470

Sign Improvements at
Goldsmith-Schiffman
Wildlife Sanctuary

SIGN CONSTRUCTION DETAILS

DATE: September 19, 2016 SCALE: 1"=1'-0"

GENERAL NOTES:

1. CONTRACTOR SHALL COORDINATE BETWEEN ALL CONSULTANTS DRAWINGS. ANY DISCREPANCIES OR CONFLICTS (INCLUDING DIMENSIONAL CONFLICTS) BETWEEN DRAWINGS OF DIFFERENT DISCIPLINES SHALL BE BROUGHT TO THE ATTENTION OF THE ARCHITECT. CONTRACTOR SHALL NOT PROCEED WITH SHOP DRAWING PREPARATION OR ANY CONSTRUCTION UNTIL THE ARCHITECT HAS GIVEN DIRECTION OF RESOLUTION OF THE DISCREPANCY OR CONFLICT.

2. CONSTRUCTION METHODS, SEQUENCES AND PROCEDURES ARE THE CONTRACTOR'S RESPONSIBILITY. THE CONTRACTOR SHALL TAKE NECESSARY PRECAUTIONS TO PROTECT AND MAINTAIN THE STRUCTURAL INTEGRITY OF ALL NEW AND EXISTING CONSTRUCTION AT ALL STAGES. THE CONTRACTOR SHALL COMPLY WITH ALL APPLICABLE SAFETY AND ERECTION REQUIREMENTS OF ALL GOVERNING PUBLIC AGENCIES DURING CONSTRUCTION. THE CONTRACTOR SHALL BE RESPONSIBLE FOR PROTECTING THE ADJACENT PROPERTY AND ROADWAYS WITH SHORING OR OTHER NECESSARY MEANS.

3. CONTRACTOR SHALL COORDINATE WITH THE ARCHITECTURAL, MECHANICAL, PLUMBING, AND ELECTRICAL DRAWINGS AND VERIFY THE LOCATIONS AND SIZES OF CHASES, INSERTS, OPENINGS, SLEEVES, FINISHES, DEPRESSIONS AND OTHER PROJECT REQUIREMENTS.

4. USE MANUFACTURER'S CERTIFIED DRAWINGS, DETAILS AND SPECIFICATIONS FOR EQUIPMENT ANCHORAGE AND INSTALLATION.

5. ALL CONSTRUCTION JOINTS SHOWN ON THE STRUCTURAL DRAWINGS SHALL BE INCORPORATED INTO THE STRUCTURE. ADDITIONAL CONSTRUCTION JOINTS TO FACILITATE CONSTRUCTION SHALL BE LOCATED AND DETAILED ON THE SHOP DRAWINGS FOR REVIEW.

6. STRUCTURAL MEMBERS & CONNECTIONS SHOWN, HAVE BEEN DESIGNED TO CARRY IN PLACE DESIGN LOADS ONLY. THE CONTRACTOR SHALL BE RESPONSIBLE FOR THE SUPPORT OF ANY ADDITIONAL LOADS AND FORCES IMPOSED DURING CONSTRUCTION, TRUCKING, ERECTING AND HANDLING.

7. THE CONTRACTOR SHALL INSURE THAT CONSTRUCTION LOADS DO NOT EXCEED THE DESIGN LIVE LOADS INDICATED ON THE STRUCTURAL DRAWINGS AND THAT THESE LOADS ARE NOT PUT ON THE STRUCTURAL MEMBERS PRIOR TO THE TIME THAT THE CONCRETE REACHES THE FULL SPECIFIED DESIGN STRENGTH, STEEL MEMBERS & THEIR CONNECTIONS ARE FULLY BOLTED AND / OR WELDED, AND ALL OTHER FRAMING MEMBERS AND THEIR CONNECTIONS ARE IN PLACE.

8. ALL THE CONTRACTOR'S PROPOSED SUBSTITUTIONS MUST BE APPROVED BY ARCHITECT/ENGINEER PRIOR TO FABRICATION OR ANY PERTINENT WORK.

9. ALL DIMENSIONS SHOWN TAKE PRECEDENCE OVER SCALE SHOWN ON PLANS, SECTIONS, AND DETAILS. DO NOT SCALE THE DRAWINGS.

10. ALL SECONDARY STRUCTURAL ELEMENTS AND NON-STRUCTURAL ELEMENTS THAT ARE NOT SPECIFICALLY DETAILED IN THE CONTRACT DOCUMENTS SHALL BE DESIGNED BY THE CONTRACTOR, UNDER THE DIRECT SUPERVISION OF A PROFESSIONAL ENGINEER REGISTERED IN THE STATE OF ALABAMA, TO MEET ALL APPLICABLE BUILDING CODE REQUIREMENTS. EXAMPLES OF THESE ELEMENTS MAY INCLUDE BUT NOT BE LIMITED TO: LIGHT-GAGE FRAMING, EQUIPMENT SUPPORT ABOVE THE PRIMARY ROOF STRUCTURE, ELEVATOR SUPPORT RAILS AND BEAMS, STAIRS & HANDRAILS, LIGHT POLE FOUNDATIONS AND RETAINING WALLS INDEPENDENT OF THE PRIMARY BUILDING.

11. THE CONTRACTOR SHALL FIELD-VERIFY ALL RELEVANT EXISTING CONDITIONS & DIMENSIONS PRIOR TO PERFORMING ANY PERTINENT WORK. THIS INFORMATION SHALL BE INCORPORATED INTO THE SHOP DRAWINGS PRIOR TO ARCHITECT/ENGINEER REVIEW.

CONCRETE:

1. CONCRETE SCHEDULES

ITEM	28 DAY COMPRESSIVE STRENGTH
A. CONCRETE FILL FOR MASONRY	3000 PSI GROUT W/ 8" TO 11" SLUMP (ASTM C 1019 OR ASTM C 476)

2. CONCRETING OPERATIONS SHALL COMPLY WITH ACI 117 AND ACI 301.

REINFORCING:

1. ALL REINFORCING SHALL CONFORM TO THE LATEST REVISION OF ASTM SPECIFICATION A615, GRADE 60, UNLESS NOTED OTHERWISE.

2. ALL REINFORCING SHALL BE DETAILED IN ACCORDANCE WITH A.C.I. STANDARD 315, OF LATEST REVISION. SUBMIT FABRICATION & PLACEMENT DRAWINGS FOR REVIEW.

3. NO REINFORCING BAR SHALL BE WELDED IN ANY MANNER, UNLESS SPECIFICALLY SHOWN OR NOTED ON THE DRAWINGS. IF ALLOWED, ALL WELDING SHALL COMPLY WITH AWS D1.4, AND REINFORCING BARS SHALL BE ASTM A706 WELDABLE REBAR ONLY.

CONCRETE MASONRY:

1. MASONRY CONSTRUCTION SHALL CONFORM TO ACI 530.1 SPECIFICATION.

2. MASONRY COMPRESSIVE STRENGTH (f'm) SHALL BE 1500 PSI BASED ON THE UNIT STRENGTH METHOD OR VERIFIED BY PRISM TESTS IN ACCORDANCE WITH ASTM C 1314.

3. MORTAR SHALL BE TYPE S OR M.

4. REINFORCING BARS SHALL CONFORM TO ASTM A615, GRADE 60.

5. BLOCK FILL SHALL BE GROUT WITH AN 8" TO 11" SLUMP, PROPORTIONED PER ASTM C 476 OR ATTAINING 3000 PSI AT 28 DAYS PER ASTM C 1019. DO NOT USE MORTAR AS BLOCK FILL.

6. ALL GROUT SHALL BE CONSOLIDATED AT TIME OF PLACEMENT USING A LOW-VELOCITY MECHANICAL VIBRATOR WITH A 3/4-INCH HEAD. RE-CONSOLIDATE GROUT AFTER INITIAL WATER LOSS AND SETTLEMENT HAS OCCURRED. DO NOT PLACE NEXT LIFT OF GROUT UNTIL LOWER LIFT HAS BEEN RE-CONSOLIDATED.

7. ALL BLOCK CELLS AND CAVITIES BELOW GRADE SHALL BE GROUTED SOLID. ALL LINTELS & BOND BEAMS SHALL BE GROUTED SOLID.

8. ALL BLOCK CELLS WHICH HAVE VERTICAL REINFORCING SHALL BE GROUTED FULL-HEIGHT IN 5'-0" LIFTS (MAXIMUM HEIGHT). EACH LIFT SHALL STOP 2" BELOW TOP OF BLOCK COURSE UNLESS AT TOP OF WALL. VERTICAL REINFORCING SHALL BE DOWELLED TO FOOTING WITH HOOKED BARS AND EXTEND FULL-HEIGHT INTO BOND BEAM. WHERE SPLICES ARE NECESSARY, PROVIDE LAP LENGTH = 48 BAR DIAMETERS. GEOTECHNICAL ENGINEER SHALL ALL ADEQUATE CONCRETE DEPTH IN FOOTING TO ENSURE FULL EMBEDMENT AS REQUIRED FOR ALL VERTICAL REINFORCING.

9. VERTICAL REINFORCING SHALL BE LOCATED IN THE CENTER OF THE BLOCK CELLS, UNLESS NOTED, AND SHALL BE HELD IN PLACE WITH BAR POSITIONERS (HECKMANN #376 OR HOHMANN & BARNARD #RB) PRIOR TO GROUTING. "WET-STICKING" OF REINFORCING SHALL NOT BE ALLOWED.

10. AT CORNERS AND INTERSECTIONS OF BOND BEAMS IN WALLS, PROVIDE CORNER BARS (48 DIAMETERS LONG EA. LEG) TO TIE WALLS TOGETHER. BAR DIAMETER SHALL MATCH BOND BEAM REINFORCING.

11. AT TOP OF ALL MASONRY WALLS (BEARING OR NON-BEARING), PROVIDE 8" DEEP CONTINUOUS BOND BEAM REINFORCED WITH 2#5 CONTINUOUS, UNLESS NOTED.

12. ALL STRUCTURAL MASONRY WALLS SHALL BE RUNNING BOND, UNLESS NOTED.

13. RUNNING BOND WALLS: MINIMUM HORIZONTAL WALL REINFORCING SHALL CONSIST OF STANDARD (9 GAGE) LADDER-TYPE JOINT REINFORCING AT EVERY OTHER COURSE (16" O.C.) COORD. W/ ARCH'T DRAWINGS.

STRUCTURAL STEEL:

1. ALL STRUCTURAL STEEL PLATES, ANGLES AND CHANNELS SHALL CONFORM TO ASTM A36

2. ALL STRUCTURAL STEEL TUBING SHALL CONFORM TO ASTM A500, GRADE B

3. FABRICATION AND ERECTION SHALL CONFORM TO AISC CODE OF STANDARD PRACTICE. SUBMIT SHOP & ERECTION DRAWINGS FOR REVIEW, INCLUDING THE REQUIRED CONNECTION DESIGN INFORMATION DESCRIBED BELOW. SUBMITTALS THAT ARE SUBSTANTIALLY INCOMPLETE WILL BE REJECTED WITHOUT REVIEW.

4. ALL STRUCTURAL STEEL CONNECTIONS NOT SPECIFICALLY DETAILED ON THE DRAWINGS SHALL BE DESIGNED BY THE FABRICATOR, UNDER THE DIRECT SUPERVISION OF A PROFESSIONAL ENGINEER REGISTERED IN THE STATE OF ALABAMA, TO RESIST THE FORCES INDICATED. UNLESS STAMPED BY THE FABRICATOR'S ENGINEER, THE SHOP DRAWINGS SHALL INCLUDE A SEALED LETTER FROM THE FABRICATOR'S ENGINEER CERTIFYING THAT THE CONNECTIONS SHOWN IN THE SHOP DRAWINGS ARE ADEQUATE FOR THE REQUIRED LOADS. DO NOT SUBMIT CALCULATIONS EXCEPT WHERE SPECIFICALLY REQUESTED.

5. ALL CONNECTIONS SHALL BE DESIGNED USING THE ALLOWABLE STRESS DESIGN (ASD) METHOD. ALL REACTIONS SHOWN OR CALCULATED SHALL BE SERVICE-LOAD LEVEL FORCES, UNLESS NOTED.

6. ALL BEAM CONNECTIONS SHALL BE DESIGNED FOR AN AXIAL LOAD OF 5% OF THE BEAM REACTION UNLESS NOTED.

7. ALL BEAM CONNECTIONS SHALL BE AISC TYPE 2 "SIMPLE FRAMING" CONNECTIONS, UNLESS NOTED. WHERE BEAM REACTIONS ARE NOT SHOWN ON THE DRAWINGS, THE CONNECTIONS SHALL BE DESIGNED TO SUPPORT A REACTION EQUAL TO ONE-HALF THE TOTAL UNIFORM LOAD CAPACITY FROM THE TABLE OF MAXIMUM TOTAL UNIFORM LOADS, AISC MANUAL PART 3, FOR GIVEN SHAPE, SPAN AND GRADE OF STEEL, MULTIPLIED BY A FACTOR OF 1.2 FOR NON-COMPOSITE BEAMS OR BY 1.7 FOR COMPOSITE BEAMS.

8. WELDED CONNECTIONS (AWS D1.1): E70XX ELECTRODES, E308XX FOR STAINLESS STEEL (AWS D1.6). THICKNESS OF WELDS SHALL BE AS SHOWN, SPECIFIED OR REQUIRED, BUT NOT LESS THAN 3/16" FILLET WELD.

9. ALL EXPOSED EXTERIOR STRUCTURAL STEEL SHALL BE HOT-DIP GALVANIZED IN ACCORDANCE WITH ASTM A143, ASTM A123/A153, ASTM A384 & ASTM A385, UNLESS THE EXPOSED STEEL IS OTHERWISE INDICATED IN THE ARCHITECTURAL DRAWINGS OR SPECIFICATIONS AS PAINTED-ONLY OR STAINLESS STEEL. PROVIDE 3" MIN. CONCRETE COVER FOR ALL STRUCTURAL STEEL BELOW GRADE.

SHOP DRAWINGS & SUBMITTALS:

1. ALL SHOP DRAWINGS SHALL BE NEWLY PREPARED. REPRODUCTIONS OF CONTRACT STRUCTURAL DRAWINGS FOR USE AS ERECTION DRAWINGS WILL NOT BE PERMITTED. SHOULD SHOP DRAWING SUBMITTALS CONTAIN ANY REPRODUCTIONS OF CONTRACT STRUCTURAL DRAWINGS, THEY WILL BE REJECTED AND RETURNED WITHOUT ENGINEER REVIEW.

2. CONTRACTOR SHALL REVIEW ALL SUBMITTALS AND STAMP WITH APPROVAL PRIOR TO SUBMISSION TO ARCHITECT/ ENGINEER. SHOP DRAWINGS RECEIVED BY ARCHITECT/ENGINEER THAT HAVE NOT BEEN CHECKED AND COORDINATED BY THE CONTRACTOR WILL BE RETURNED WITHOUT ARCHITECT/ENGINEER'S REVIEW.

3. CONTRACTOR SHALL SUBMIT SHOP DRAWINGS IN ELECTRONIC (PDF) FORMAT INSTEAD OF PAPER COPIES. THESE WILL BE REVIEWED AND RETURNED BY THE STRUCTURAL ENGINEER IN PDF FORMAT ONLY. ADDITIONAL COPIES REQUIRED BY THE CONTRACTOR SHALL BE MADE BY THE CONTRACTOR AFTER THE REVIEW PROCESS. ALLOW TWO WEEKS FOR THE REVIEW OF EACH SUBMITTAL.

DESIGN CRITERIA:

1. BUILDING CODES AND STANDARDS:
   - A. INTERNATIONAL BUILDING CODE
   - B. AMERICAN SOCIETY OF CIVIL ENGINEERS, ASCE 7
   - C. AMERICAN CONCRETE INSTITUTE, ACI 318
   - D. AMERICAN CONCRETE INSTITUTE, ACI 530
   - E. AMERICAN INSTITUTE OF STEEL CONSTRUCTION, AISC
   - F. AMERICAN WELDING SOCIETY, AWS

2. LATERAL DESIGN LOADS:
   - A. WIND
     - a. BASIC WIND SPEED = 90 MPH
     - b. EXPOSURE CATEGORY = B

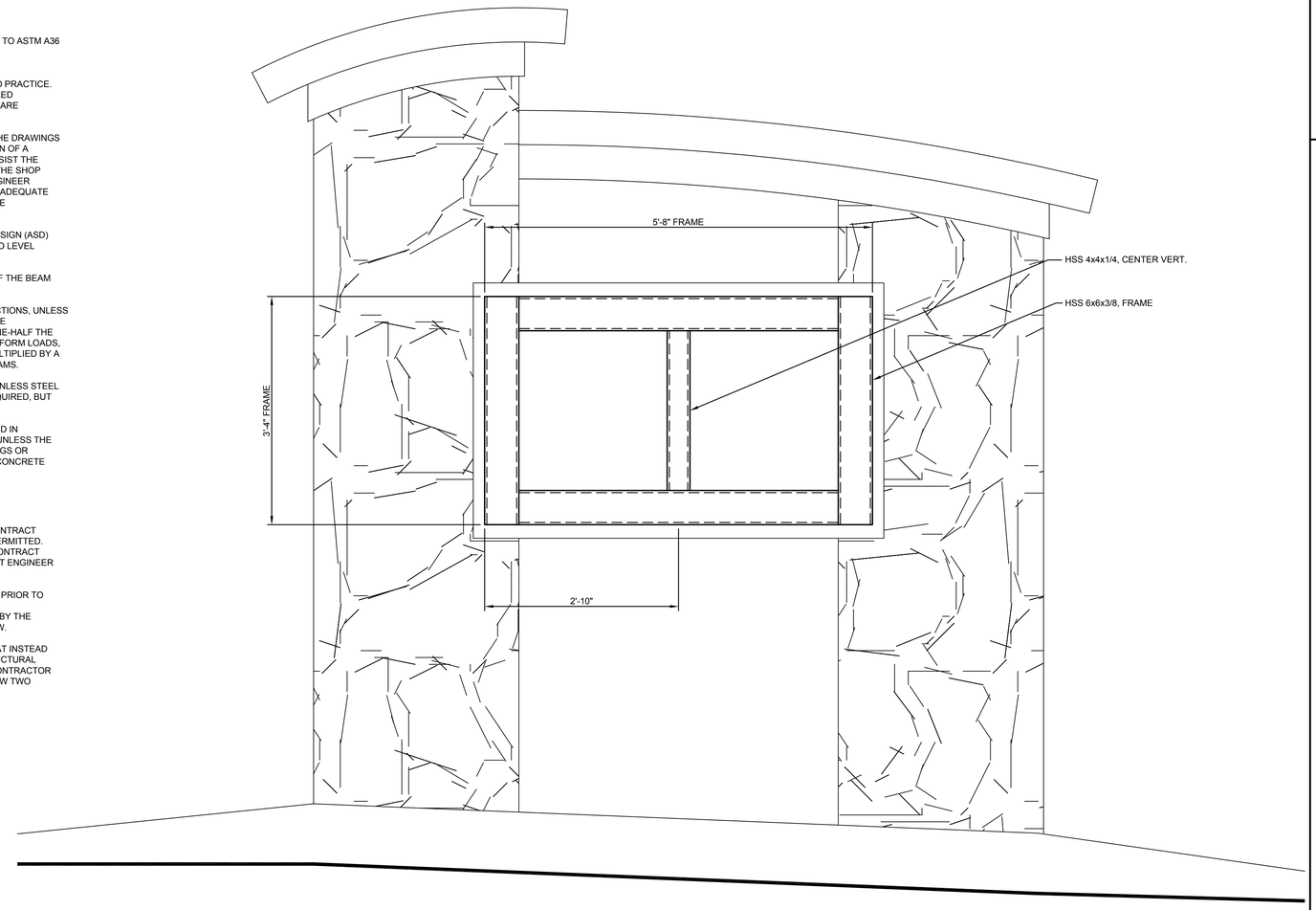

MONUMENT SIGN ELEVATION

1" = 1'-0"

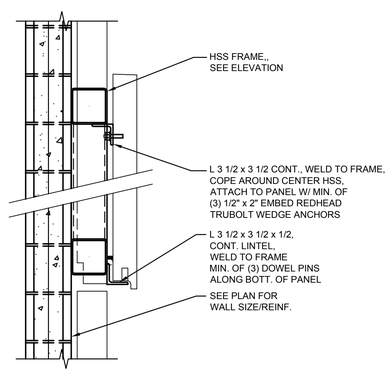

1 S-1 SECTION

1" = 1'-0"

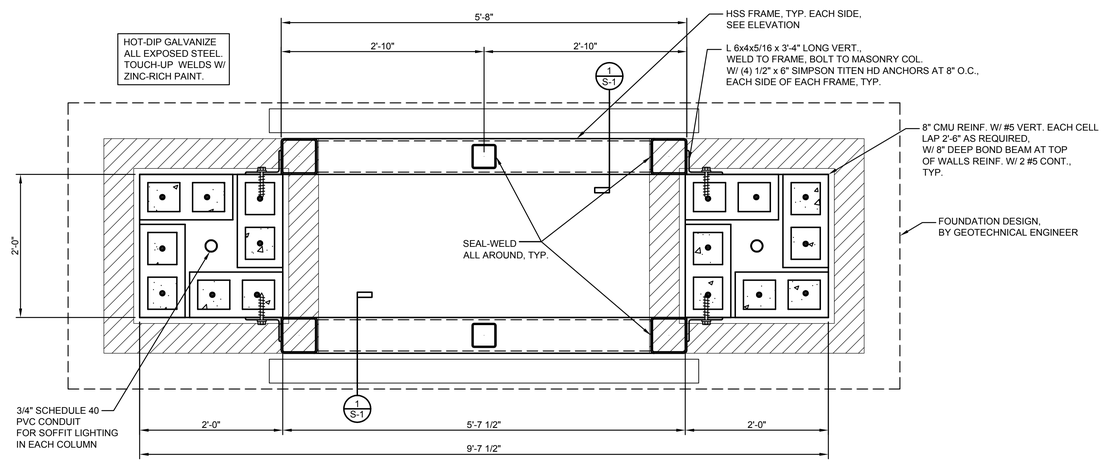

MONUMENT SIGN PLAN

1" = 1'-0"

ELM Echols, Lindsey & Moore
Structural Engineers, Inc.
810 Regal Drive SW Suite C Huntsville, AL 35801
Phone: 256.864.2542
Project No.16173

STATE OF ALABAMA
CLAUDE H. MOORE
No. 25759
PROFESSIONAL ENGINEER
8/16/2016

L A N D D E S I G N S O L U T I O N S

6996 LINDA STREET
HUNTSVILLE, ALABAMA 35811

256.714.1470

Sign Improvements at
Goldsmith-Schiffman
Wildlife Sanctuary

SIGN DETAILS

DATE: August 16, 2016

SCALE: 1"=1'-0"

sheet
S-1

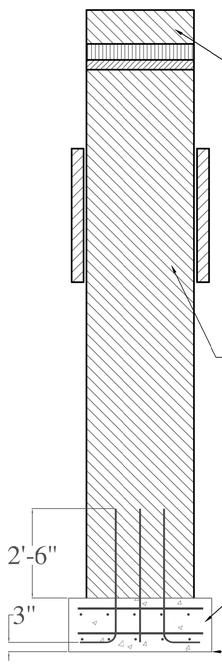

WEST SIDE VIEW

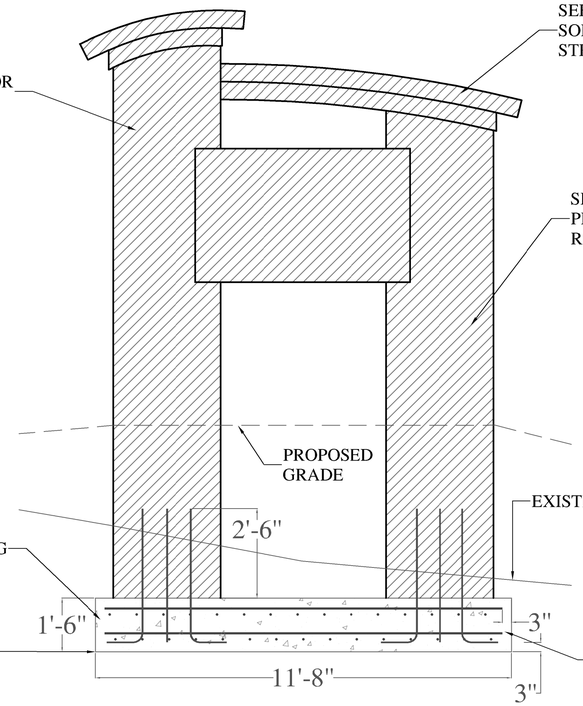

SOUTH ELEVATION

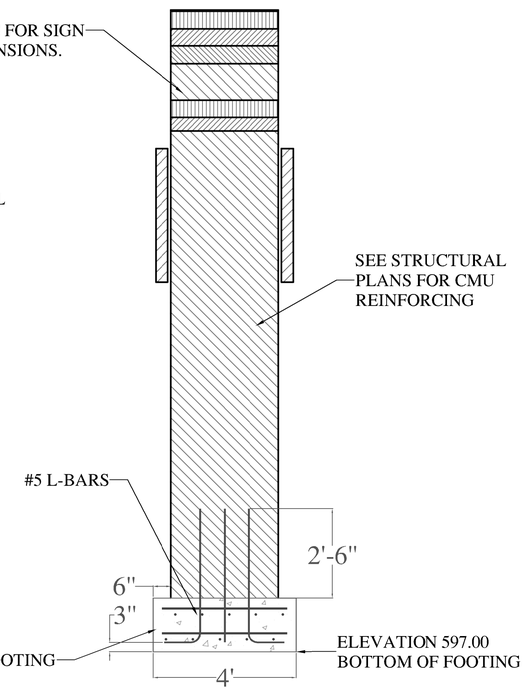

EAST SIDE VIEW

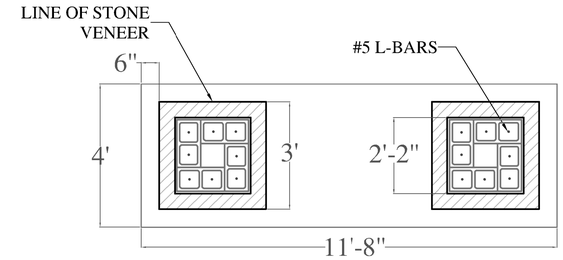

PLAN VIEW
COLUMNS

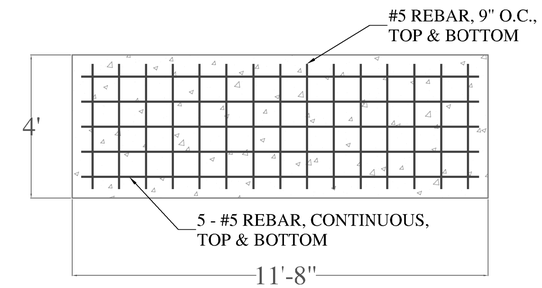

PLAN VIEW
FOUNDATION PAD

NOTE: ALL CONCRETE SHALL MEET A COMPRESSIVE STRENGTH OF 3000 PSI IN 28 DAYS.

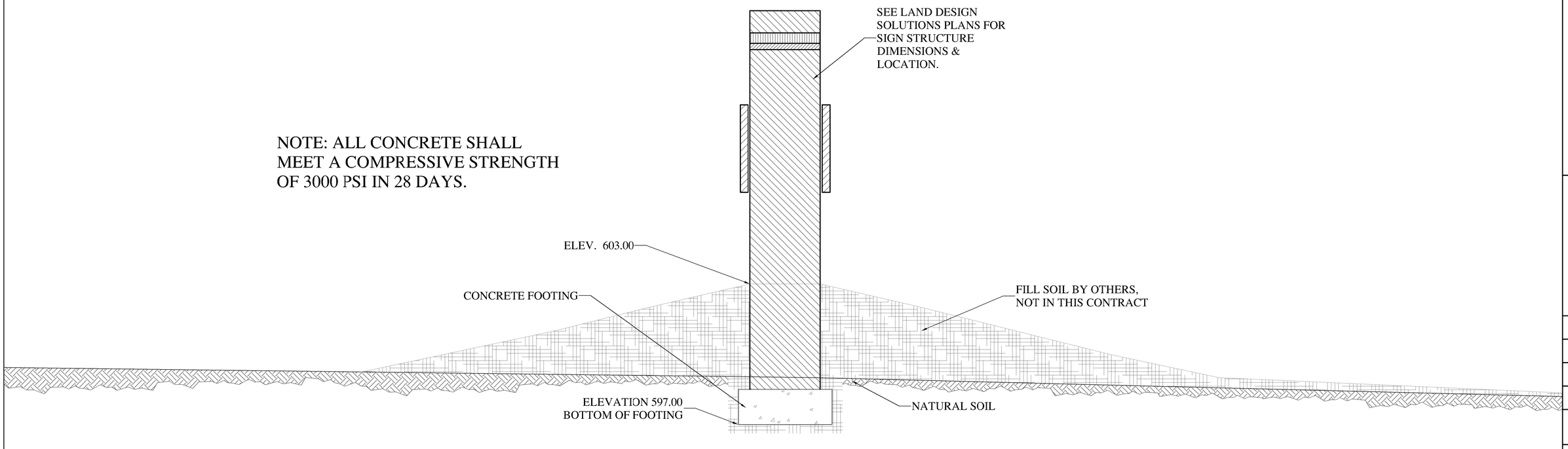

NORTH-SOUTH SECTION THROUGH SIGN

NOTE: THIS DRAWING HAS BEEN REDRAWN FROM A DRAWING BY: LAND DESIGN SOLUTIONS, HUNTSVILLE, ALABAMA.

RESERVED FOR STAMP

REVISIONS
08-24-2016
09-13-2016
09-19-2016

ENTRANCE SIGN DETAILS

GOLDSMITH-SCHIFFMAN WILDLIFE SANCTUARY
TAYLOR ROAD
HUNTSVILLE, ALABAMA

OMI, Inc.
5151 Research Dr. NW
Huntsville, AL 35805
PH: (256) 837 - 7664
FAX: (256) 837 - 7677

DATE: 07-30-2014
SCALE: 1/2" = 1'
DRAWN BY: CCT
CHECKED BY: KJM
JOB NUMBER
6982
DRAWING NUMBER
1 OF 1